HAL
open science

A Matrix Approach to the Customer-oriented Product Design

Ming-Chyuan Lin, Lung-An Chen

To cite this version:

Ming-Chyuan Lin, Lung-An Chen. A Matrix Approach to the Customer-oriented Product Design. Concurrent Engineering: Research and Applications, 2005, 13 (2), pp.95-109. 10.1177/1063293X05053795 . hal-00571178

HAL Id: hal-00571178

https://hal.science/hal-00571178v1

Submitted on 1 Mar 2011

HAL is a multi-disciplinary open access archive for the deposit and dissemination of scientific research documents, whether they are published or not. The documents may come from teaching and research institutions in France or abroad, or from public or private research centers.

L'archive ouverte pluridisciplinaire **HAL**, est destinée au dépôt et à la diffusion de documents scientifiques de niveau recherche, publiés ou non, émanant des établissements d'enseignement et de recherche français ou étrangers, des laboratoires publics ou privés.

CONCURRENT ENGINEERING: Research and Applications

A Matrix Approach to the Customer-oriented Product Design

Ming-Chyuan Lin* **and Lung-An Chen**

Department of Industrial Design, College of Planning and Design, National Cheng Kung University, Tainan, Taiwan 701

Abstract: A customer-oriented product designer must rely on many types of information, including customer-product requirements and design developments in the related fields. Concurrent engineering applications in product design problems will help designers to systematically consider relevant design information and make the most effective use of the time they devoted to the design process. Even though many new principles and approaches have been introduced to help designers to identify the relationship between customer requirements and design characteristics and solve complex design problems, they seldom focus on the generation of feasible design alternatives. This drawback greatly affects customer-oriented product design development.

This research introduces a matrix approach that can efficiently generate feasible design alternatives for a specific set of customer requirements. The procedures developed for this matrix approach is based on a congruent matrix multiplication operator, component design strategy, and relational database system. A sport shoe design is used as an example to help explain the development of these procedures. The results indicate that the matrix approach will assist designers in linking customer requirements with products during design development and even enhance the efficiency of concurrent engineering.

Key Words: matrix approach, customer-oriented product design, relational database system, component design strategy, congruent matrix multiplication operator.

1. Introduction

Product design is a creative process that integrates abstract design components into a complete specification of product characteristics that satisfy customer requirements. The growth of manufacturing technology has long been more advanced than product design, but product design plays an important role in developing manufacturing systems for improving manufacturability, quality, and cost reduction [1,2]. Because product design is a very complicated task, many companies have tried to use computer-aided design (CAD), computer-aided manufacturing (CAM), computer-integrated manufacturing (CIM) systems and computer-based information systems in the design process to enhance the efficiency of their product design efforts [3–5]. These efforts have been directed toward the integration of design and manufacturing related techniques into the concurrent engineering (CE) concept [6]. Prasad [6] developed an integrated product development (IPD) system that emphasized the importance of customer requirements in CE. As competition in the world market has increased, many manufacturing industries have gradually changed their production policy into mass customization to create a crucial connection between the customers' requirements and products [7]. Mousavi et al. [8] presented a customer optimization route and evaluation (CORE) model that translated the customers' qualitative requirements into design attributes for customer-oriented design. Chen et al. [9] proposed a prototype customer-oriented product concept formation system that involved system, technology, and human levels in the product development. Ulrich and Eppinger [10] mentioned that unlike technology-driven products, customer-driven product design should work closely with marketing to identify the proper customer requirements. However, most designers have their own unique biases that produce a multitude of design alternatives by different designers to meet similar design criteria. This will significantly affect the processes used in evaluating design alternatives and may also require a considerable amount of time.

In general, product design is a hybrid activity that is based primarily on the customer requirements to be met by that product. The designer must clearly define these customer requirements and design characteristics and produce an appropriate design solution [11]. Historically, a combination of personal observations such as checklist, literature search, analogies and attribute lists, and intuitive findings such as brainstorming, synetics, the Delphi method and morphological

*Author to whom correspondence should be addressed.
E-mail: minglin@mail.ncku.edu.tw

1063-293X/05/02 0095–15 $10.00/0 DOI: 10.1177/1063293X05053795
© 2005 Sage Publications

box, and systematic analysis such as market research, design catalogs and study of physical processes, have been used to help designers identify and select customer requirements and design characteristics [12–14]. Tseng and Jiao [15] introduced a product definition methodology for functional requirements (PDFR) incorporating a requirement management database (RMDB) to improve product definition during the design and redesign processes. These customer requirements and design characteristics should then be restructured or grouped to express their relationships to determine the design approach that will make the product design more successful. A popular technique, quality function deployment (QFD) in CE can provide designers with a way to explore the relationship between the customer's voice and the design characteristics [16]. Suh [17] introduced the axiomatic design concept and suggested that the designer begin the design process by defining the functional requirements for the design problem at hand; such that the functional requirements are independent of each other and their integration is not redundant. Jiao and Zhang [18] further proposed an association rule mining system (ARMS) for product portfolio identification that entailed a mapping process from the customer needs to the functional requirements. Although the QFD techniques, axiomatic design and related research theories such as concurrent function deployment (CFD) [19] are very helpful for designers in considering customer requirements, they do not deal with the generation of feasible design alternatives. Generating feasible design alternatives in most design activities is still heavily reliant on the designer's subjective opinion, experience, and knowledge. This greatly affects the development of design automation.

Systematic approaches to the product design process will assist the designer in identifying design problems, design criteria, and enhance the evaluation effectiveness of the final design solution [20]. Using mathematical matrix properties can even permit the designer to efficiently apply computer technologies in design process development. In most design processes, it is possible to represent the customer requirements and design problem specification solutions in vector form. The objective of this research is to develop a matrix approach that assists the designer in generating feasible design alternatives for specific sets of customer requirements. The proposed approach uses the component design strategy concept [21] and relational database system [22,23] to manipulate previous information and newly developed system components. The system identifies the relationship between input customer requirements and output design parameters. Note that the proposed matrix approach will be applied to consumer products. The matrix approach applicability is demonstrated in choosing a sport shoe design. The final system will easily assist designers or manufacturers in closely linking the product design process with CIM systems.

2. The Conceptual Matrix Approach

As mentioned above, the matrix approach will apply matrix properties to eliminate infeasible design component combinations and generate feasible design alternatives. A coding system will be developed to manipulate geometric parameter information and to provide an interface between the product design and CAD/CAM/CIM systems [3].

The input and output parameters used in developing the matrix approach will be modified to provide two types of information: (1) text information using semantic words or sentences to express meaning, and (2) geometric forms to represent the product components. Based on the revised input and output parameter characteristics and their design relationships, the matrix approach steps are developed as follows:

Step 1. Develop an input/output interaction matrix

Let the set of design input parameters that represent the customer requirements be denoted as $[X_1, X_2, \ldots, X_{m-1}, X_m]$ and the set of design output parameters that represent the design solution be denoted as $[Y_1, Y_2, \ldots, Y_{n-1}, Y_n]$. The set of possible values for each design input parameter is denoted as U_{p,q_p}; where $p = 1, 2, \ldots, m$ corresponds to the design input parameters X_1, X_2, $\ldots, X_m$; and $q_p = 1, 2, \ldots, A_p$, where $A_1, A_2, \ldots, A_m$ represent the number of possible values for the design input parameters $X_1, X_2, \ldots, X_m$, respectively. The set of possible values for each design output parameter is denoted as V_{i,j_i}; where $i = 1, 2, \ldots, n$ corresponds to design output parameter $Y_1, Y_2, \ldots, Y_n$, and $j_i = 1, 2, \ldots, B_i$, where $B_1, B_2, \ldots, B_n$ represent the number of possible values for design output parameter $Y_1, Y_2, \ldots, Y_n$, respectively. The input/output matrix is then represented as

$$\begin{array}{ll} & \text{Design output parameters} \\ & \begin{array}{cc} & \begin{array}{cccccc} Y_1 & Y_2 & \cdot & \cdot & \cdot & Y_n \end{array} \\ \begin{array}{c} \text{Design} \\ \text{input} \\ \text{parameters} \end{array} & \begin{array}{c} X_1 \\ X_2 \\ \cdots \\ \cdots \\ X_m \end{array} \begin{bmatrix} 1 & 0 & \cdot & \cdot & \cdot & 1 \\ 0 & 1 & \cdot & \cdot & \cdot & 0 \\ \cdot & \cdot & \cdot & \cdot & \cdot & \cdot \\ \cdot & \cdot & \cdot & \cdot & \cdot & \cdot \\ 0 & 0 & \cdot & \cdot & \cdot & \cdot \end{bmatrix} \end{array} \end{array}$$

A design input/output parameters interaction matrix will be developed based on the sport shoe design research literature, expert opinion, and product performance characteristics. The matrix will document relationships among design input and output parameters.

Step 2. Generate a feasible choice matrix

The procedure to be developed will link the customer's requirements in terms of values for the set of design input parameters to a matrix array called the choice matrix. This choice matrix array will have the number of rows as the number of selected design output parameters. The number of columns in this array will equal the number of each row of design output parameter values. The typical element in a choice matrix will have the following value:

$C_{i,j} = 1$ if the design output parameter value 'j' in design output parameter 'i' is selected as a component of a pair of shoes proposed to satisfy the customer's requirements, and

$C_{i,j} = 0$ if the design output parameter value 'j' in design output parameter 'i' will not be a part of the proposed pair of shoes.

Note that in any feasible choice matrix

$$\sum_{\substack{\text{all members '}j\text{'} \\ \text{in the design} \\ \text{output parameters}}} C_{i,j} = 1 \quad \text{for every selected design output parameter '}i\text{'}$$

The functional links among feasible choice matrix element values and particular design input parameter values will be developed based on the developed input/output interaction matrix, expert opinion, and the rules employed in the procedure.

Step 3. Generate feasible design alternatives

A matrix array is formed using the design output parameters and values. Each column in this array is a design output parameter vector corresponding to a particular pair of design output parameter values. To create a feasible design alternative, the design output parameter value array information is post-multiplied by a feasible choice matrix and a column vector with all elements equal to one, as shown below:

$$\begin{bmatrix} \text{Matrix of vectors} \\ \text{corresponding to} \\ \text{design output} \\ \text{parameters and} \\ \text{values} \end{bmatrix} \square \begin{bmatrix} \text{Feasible} \\ \text{choice} \\ \text{matrix} \end{bmatrix} \bullet \begin{bmatrix} 1 \\ 1 \\ \vdots \\ 1 \end{bmatrix} = \begin{bmatrix} \text{Feasible} \\ \text{design} \\ \text{alternative} \\ \text{vector} \end{bmatrix}$$

where $\square$ is the congruent matrix multiplication operator [24], $\bullet$ denote standard matrix multiplication, and a feasible design alternatives is represented by a vector of design output parameter values.

Figure 1 shows the overall development procedures for the matrix approach. Note that a particular customer's requirements, expressed in terms of a set of design input parameter values linked to several alternative choice matrices. Each distinct choice matrix can be used to

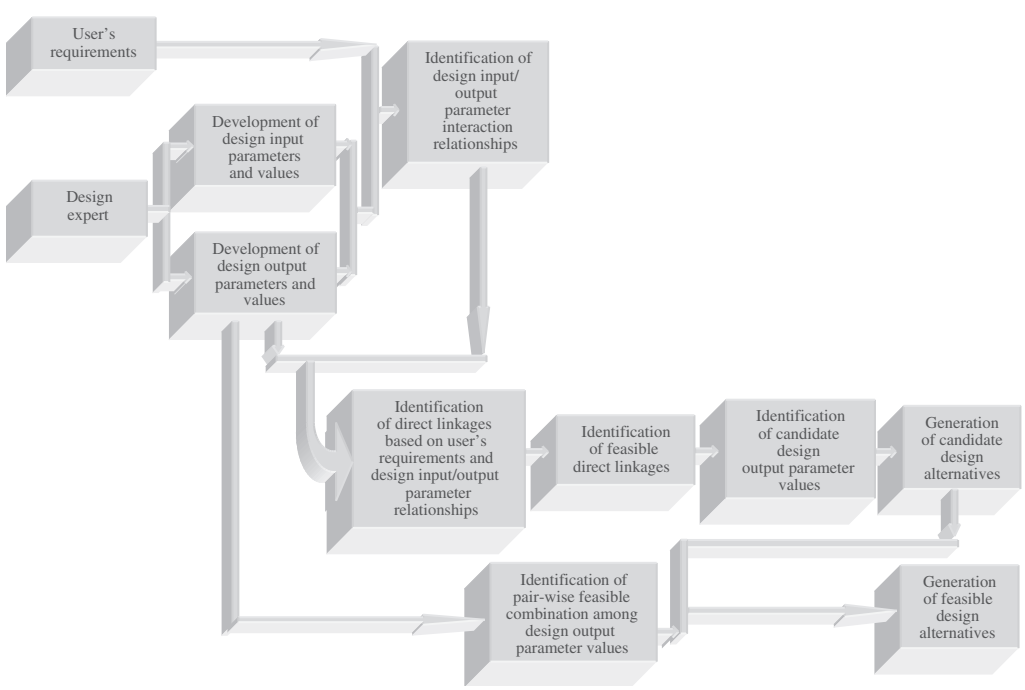

Figure 1. Conceptual framework for the matrix approach.

generate a feasible design alternative. Thus, the choice matrix plays a decisive role in design alternative creation. To generate an appropriate choice matrix, the designer must examine the relationships among the customer requirements, the input/output interaction matrix, and the design output parameter values matrix vectors.

3. Development of the Matrix Approach

Since customer input requirements and design output recommendations are two major parts in product design development, the component design strategy starts by defining design input parameters and values for the customer input requirements, and concludes with the design output parameter values for the design output recommendations. The design input parameters and values can include the customer's expected purchase price levels, operational functions, specific purchase objectives, and types of uses; while the design output parameters and values characterize the product components that are essential to the final product design.

Bridges such as performance data, facts, or rules are needed to link design input requirements with design output recommendations so that the designer can efficiently identify a suitable solution based on the specified customer requirements.

To explain how the matrix approach is developed, a sport shoe design will be used as an example to illustrate the steps of the proposed approach. The reason for choosing a sport shoe design as an example is that the sport shoe is a familiar product in almost everyone's daily life. Each year many new sport shoe styles come into the competitive market. The main components of a typical sport shoe are shown in Figure 2 [25].

3.1 Identification of Input and Output Relationships

Let X_{DIP} denote the set of design input parameters that identify the labels or names. Y_{DOP} denote the set of design output parameters that identify the labels or names.

$$X_{DIP} = \{X_p \mid p = 1, 2, \ldots, m\}$$
$$Y_{DOP} = \{Y_i \mid i = 1, 2, \ldots, n\}$$

Meanwhile, let

- U_p denote the set of A_p alternative design input parameter values corresponding to the design input parameter X_p, $p = 1, 2, \ldots, m$.
- V_i denote the set of B_i alternative design output parameter values corresponding to the design output parameter Y_i, $i = 1, 2, \ldots, n$.

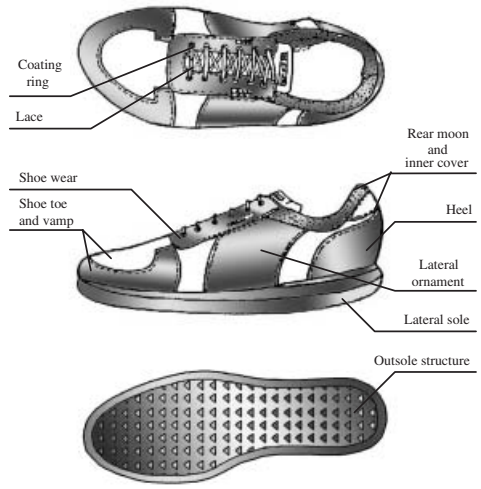

Figure 2. Characteristics of a sport shoe.

Thus, $U_p = \{U_{p,q_p} \mid q_p = 1, 2, \ldots, A_p$, and $p = 1, 2, \ldots, m\}$, and $V_i = \{V_{i,j_i} \mid j_i = 1, 2, \ldots, B_i$, and $i = 1, 2, \ldots, n\}$.

Then, let

- X denote the design input parameter concatenation identifiers X_{DIP} and design input parameter values U_p to represent customer input requirements.
- Y denote the design output parameter concatenation identifiers Y_{DOP} and design output parameter values V_i to represent design output recommendations.

Hence, $X = \{(X_p, U_p) \mid p = 1, 2, \ldots, m\}$, and $Y = \{(Y_i, V_i) \mid i = 1, 2, \ldots, n\}$.

Tables 1 and 2 illustrate the representation of design input parameters and values X, and design output parameters and values Y, respectively, for the sport shoe design example [26–28].

Let I be a $\boldsymbol{n} \times \boldsymbol{m}$ interaction matrix with typical element $I_{i,p}$, where

$$I_{i,p} = \begin{cases} 1 & \text{if and only if } X_p \text{ has some significant relationships with } Y_i,\ i = 1, 2, \ldots, n \text{ and } p = 1, 2, \ldots, m \\ 0 & \text{otherwise} \end{cases}$$

The choice of the value '1' or '0' for each element of $I_{i,p}$ is based on a judgment that the selection among the alternative design input parameter values X_p has a significant effect or a direct relationship on the appropriate selection of value(s) for the design output parameter Y_i. Some of the considerations that are helpful in making this judgment include the price/cost of the product or product components, manufacturability of product components, functional characteristics of the product, and the properties of the product materials.

Table 1. Design input parameters and values for the sport shoe design.

Design input parameter	Design input parameter value					
	1	2	3	4	5	6
TYPE OF USE	WALKING	JOGGING	RUNNING	WORKING	SPORTING	NO PREFERENCE
SHOE TYPE	WITH LACES	WITHOUT LACES	LACES W RINGS	LACES WT RINGS	NO PREFERENCE	
COMFORT	AIR CIRCULATION	SHOCKNVIBRED	MASSAGE EFFECT	NO PREFERENCE		
SAFETY	DARKID	INJURYPRE	SLIDEPRE	NO PREFERENCE		
COUNTER TYPE	LOW	MEDIUM	HIGH	NO PREFERENCE		
ACCESSORY FUN	EQRMKEYNCOIN	EQIDCARD	CHGLATERALORNA	NO PREFERENCE		

Note: SHOCKNVIBRED — Shock and vibration reduction
DARKID — Dark identification
INJURYPRE — Injury prevention
SLIDEPRE — Slide prevention
ACCESSORY FUN — Accessory function
EQRMKEYNCOIN — Equip with room key and coins
EQIDCARD — Equip with ID cards
CHGLATERALORNA — Changeable lateral ornament

3.2 Identification of Feasible Direct Linkages

In general, as a result of the interaction relationships specified by the input/output parameter interaction matrix, some values in U_{p,q_p} that relate to ergonomic considerations, product operation, proposed product uses, and customer characteristics will directly specify some set of values in V_{i,j_i}.

Let D represent the set of direct linkages between design input parameter values and design output parameter values.

$$D = \{(U_{p_a,q_{p_a}}, V_{i_a,j_{i_a}}) \mid p_a \in p, q_{p_a} \in A_p, i_a \in i, \text{ and } j_{i_a} \in B_i\}$$

Table 3 illustrates a portion of the set of direct linkages D (along with input and output parameter identifiers) among design input parameter values and design output parameter values for the sport shoe design example. A given set of customer requirements is represented by the vector UR, where $UR = \{U_{p_b,q_{p_b}} \mid p_b \in p;\ q_{p_b} \in A_p\}$. In this research, a set of specific customer requirements for the sport shoe design is chosen as follows:

Design input parameters	Design input parameter values
TYPE OF USE	JOGGING
SHOE TYPE	LACES W RINGS
COMFORT	AIR CIRCULATION
SAFETY	SLIDEPRE
COUNTER TYPE	NO PREFERENCE
ACCESSORY FUNCTN	EQIDCARD

A matching procedure that considers the customer requirements can be employed to identify sets of direct links among the design input parameter values and design output parameter values that directly relate to a specific set of customer requirements. For each value $U_{p_b,q_{p_b}}$ in UR that describes the customer requirement for related design input parameter X_{p_b}, check to see if D specifies any relationship between the value $U_{p_b,q_{p_b}}$ and some values $V_{i_a,j_{i_a}}$ for related design output parameter Y_{i_a}. If D specifies a relationship between $U_{p_b,q_{p_b}}$ and some $V_{i_a,j_{i_a}}$, then create an array entry for $[X_{p_b}, U_{p_b,q_{p_b}}, Y_{i_a}, V_{i_a,j_{i_a}}]$ for each identified $V_{i_a,j_{i_a}}$. If the value $U_{p_b,q_{p_b}}$ in UR is 'No Preference', which means that the customer does not specify a requirement for some particular design input parameter X_{p_b}, then there will be no values $V_{i_a,j_{i_a}}$ specified by this design input parameter value.

Let D_{IO} denote the collection of all array entries for direct linkages based on a specific set of customer requirements and design input/output interaction relationships, then

$$D_{IO} = \left\{ \left(X_{p_b}, U_{p_b,q_{p_b}}, Y_{i_a}, V_{i_a,j_{i_a}} \right) \,\middle|\, p_b \in p, q_{p_b} \in q_p, i_a \in i, \text{ and } j_{i_a} \in j_i \right\}.$$

It is possible that different values $U_{p_b,q_{p_b}}$ in UR link with different set of values $V_{i_a,j_{i_a}}$ for the same design output parameter Y_{i_a}. When this situation occurs, only those common values $V_{i_a,j_{i_a}}$ for the design output parameter Y_{i_a} are considered as feasible. The reason for this classification is the requirement that values $V_{i_a,j_{i_a}}$ specified by different customer requirements for the same design output parameter Y_{i_a} must simultaneously meet all of the given customer requirements. The intersection property from the theory of sets applies in this situation. Figure 3 illustrates that the design output parameter 'OUTSOLE STRUCT' is a feasible response to the set of design input parameter values 'JOGGING' and 'SLIDEPRE'.

Table 2. Design output parameters and values for the sport shoe design.

Design output parameters	Design output parameters value									
	No.1	No.2	No.3	No.4	No.5	No.6	No.7	No.8	No.9	No.10
Habit feature										
Convenience feature	Small pocket sealed on outer heel	Small pocket separate but can be bound on outer heel	Small pocket separate but can be bound on outer lateral ornament	Small pocket sealed on inner lateral ornament	Small pocket sealed on outer lateral ornament	Small pocket sealed on shoe wear	Small pocket separate but can be bound on shoe wear	Small pocket above laces with binding band	Small pocket on both outer heel and outer lateral ornament	Without small pocket
Safety feature	Fluorescent on pocket surface	Fluorescent on heel	Fluorescent on shoe toe	Fluorescent on outer lateral ornament	Fluorescent on both heel and shoe toe	Fluorescent on both heel and outer lateral ornament	Fluorescent on both shoe toe and outer lateral ornament	Fluorescent on heel, shoe toe and outer lateral ornament	Without fluorescent material	
Ventilation feature	Front vamp with small holes	Lateral vamp with small holes	Front vamp and lateral vamp with small holes	Without small holes						
Health feature	Massage effect using air in midsole	Massage effect using wave type of midsole	Without massage effect	Shock and vibration protection effect on midsole	Shock and vibration protection effect on rear midsole	Shock and vibration protection on outsole	Without shock and vibration effect	Massage and shock and vibration protection effect	No massage shock and vibration protection effect	
Outsole structure										
Rear moon and inner cover										
Lateral ornament					None					
Shoe wear										None
Lateral sole										
Shoe toe and vamp										
Heel							None			

Table 3. A portion of direct linkages.

DI parmeter	DIP value	DO parameter	DOP value
TYPE OF USE	JOGGING	OUTSOLE STRUCT	NO.1
TYPE OF USE	JOGGING	OUTSOLE STRUCT	NO.2
TYPE OF USE	JOGGING	OUTSOLE STRUCT	NO.3
TYPE OF USE	JOGGING	OUTSOLE STRUCT	NO.4
TYPE OF USE	JOGGING	OUTSOLE STRUCT	NO.6
TYPE OF USE	JOGGING	OUTSOLE STRUCT	NO.7
SHOE TYPE	LACES W RINGS	HABIT FEATURE	NO.1
COMFORT	AIR CIRCULATION	VENT FEATURE	NO.1
COMFORT	AIR CIRCULATION	VENT FEATURE	NO.2
COMFORT	AIR CIRCULATION	VENT FEATURE	NO.3
SAFETY	SLIDEPRE	OUTSOLE STRUCT	NO.5
SAFETY	SLIDEPRE	OUTSOLE STRUCT	NO.6
SAFETY	SLIDEPRE	OUTSOLE STRUCT	NO.7
SAFETY	SLIDEPRE	OUTSOLE STRUCT	NO.8
SAFETY	SLIDEPRE	OUTSOLE STRUCT	NO.9
SAFETY	SLIDEPRE	OUTSOLE STRUCT	NO.10
COUNTER TYPE	HIGH	REAR MOIN COVER	NO.5
COUNTER TYPE	HIGH	REAR MOIN COVER	NO.6
ACCESSORY FUNCTN	EQIDCARD	LATERAL ORNA	NO.1
ACCESSORY FUNCTN	EQIDCARD	LATERAL ORNA	NO.3

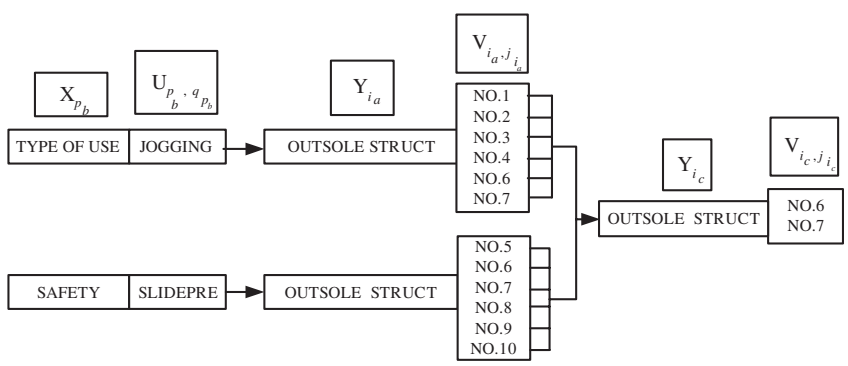

Figure 3. Intersectional direct links based on two specific customer requirements.

Let Y_{SH} denote the collection of all array entries for shared design output parameters of intersectional direct links from D_{IO}, then $Y_{SH} = \{Y_{i_c} \mid i_c \in i_a\}$.

Similarly, let D_{SH} denote the collection of all array entries for shared direct links from D_{IO}, then

$$D_{SH} = \{(X_{p_c}, U_{p_c, q_{p_c}}, Y_{i_c}, V_{i_c, j_{i_c}}) \mid p_c \in p_b, q_{p_c} \in q_{p_b}, i_c \in i_a, \text{ and } j_{i_c} \in j_{i_a}\}.$$

Another situation occurs when different customer requirements do not share any common values of $V_{i_a, j_{i_a}}$ for the same design output parameter Y_{i_a}. Here the customer must alter the set of customer requirements since there is no feasible design recommendation for this set of customer requirements.

A new array D'_{IO} will be formed from D_{IO} to identify feasible direct links between design input parameter values and design output parameter values for a specific set of customer requirements and design input/output interaction relationships. That is, let D'_{IO} denote the collection of all array entries of feasible direct links from D_{IO}, then

$$D'_{IO} = \left\{\left(X_{p'_b}, U_{p'_b, q_{p'_b}}, Y_{i'_a}, V_{i'_a, j'_{i_c}}\right) \middle| p'_b \in p_b, q_{p'_b} \in q_{p_b}, i'_c \in i_a, \text{ and } j_{i'_a} \in j_{i_a}\right\}.$$

To identify the feasible direct links from D_{IO}, a procedure must be developed that insures that different values $U_{p_b,q_{p_b}}$ in UR are only linked with the shared values $V_{i_a,j_{ia}}$ for each design output parameter Y_{i_a}. The following two steps will be used to form D'_{IO}.

Step 1. For each array entry in D_{IO}, check the values $U_{p_b,q_{p_b}}$ associated with each design output parameter Y_{i_a}. If there are different values $U_{p_b,q_{p_b}}$ associated with same design output parameter Y_{i_c}, then create an array entry $[Y_{i_c}]$ in Y_{SH} for the shared design output parameter Y_{i_c}. If there are no such Y_{i_c}, the intersection situation does not need to be considered. The purpose of creating the array $[Y_{i_c}]$ in Y_{SH} is to determine if the intersection situation occurs in D_{IO}; and, if it does occur, to determine which design output parameters are affected. Furthermore, if the different values $U_{p_b,q_{p_b}}$ associated with each design output parameter Y_{i_c} share some set of design output parameter values $V_{i_a,j_{ia}}$, then create an entry in another array D_{SH} for each $[X_{p_c}, U_{p_c,q_{p_c}}, Y_{i_c}, V_{i_c,j_{ic}}]$ where the values $U_{p_c,q_{p_c}}$ and $V_{i_c,j_{ic}}$ correspond to the shared relationship. The purpose of creating the array $[X_{p_c}, U_{p_c,q_{p_c}}, Y_{i_c}, V_{i_c,j_{ic}}]$ in D_{SH} is to determine the common design output parameter values in D_{IO} that are shared by different design input parameter values so that feasible direct links can be identified. Once the arrays $[Y_{i_c}]$ in Y_{SH} and $[X_{p_c}, U_{p_c,q_{p_c}}, Y_{i_c}, V_{i_c,j_{ic}}]$ in D_{SH} are formed, check to see if there is at least one $[X_{p_c}, U_{p_c,q_{p_c}}, Y_{i_c}, V_{i_c,j_{ic}}]$ in D_{SH} for each entry $[Y_{i_c}]$ in Y_{SH}. If so, then all of different values $U_{p_b,q_{p_b}}$ associated with some design output parameter Y_{i_a} must share at least one common design output parameter values $V_{i_a,j_{ia}}$ in D_{IO}. Step 2 in the determination of feasible direct links will actually create the array D'_{IO}.

Step 2. From step 1, for each entry Y_{i_c} in Y_{SH}, place all of the identified entries $[X_{p_c}, U_{p_c,q_{p_c}}, Y_{i_c}, V_{i_c,j_{ic}}]$ in the new array D'_{IO}. For those Y_{i_a} in D_{IO} that are not contained in the entries $[Y_{i_c}]$ of Y_{SH} place all of the corresponding $[X_{p_b}, U_{p_b,q_{p_b}}, Y_{i_a}, V_{i_a,j_{ia}}]$ in D'_{IO}.

3.3 Candidate Design Output Parameter Value Identification

The set of direct links D'_{IO}, that relate a specific set of customer requirements and design input/output parameter interaction relationships to design output parameter values, can be used to determine the set of all candidate design alternative values.

A three-pronged procedure for candidate design output parameter value identification can be developed using these three decision criteria.

Compare each design output parameter Y_{i_d} corresponding to the row values $V_{i_d,j^k_{i_d}}$ with the $Y_{i'_a}$ for array entries $[X_{p'_b}, U_{p'_b,q_{p'_b}}, Y_{i'_a}, V_{i'_a,j_{i'_a}}]$ in D'_{IO}.

(i) If there is no $Y_{i'_a}$ that is equivalent to the design output parameter Y_{i_d}, all of the row values $V_{i_d,j^k_{i_d}}$ that correspond to design output parameter Y_{i_d} are available as candidate design output parameter values. Create a new array entry with $[V_{i_d,j^k_{i_d}} \mid k = 1, 2, \ldots, B_i]$.

(ii) If design output parameter Y_{i_d} matches some $Y_{i'_a}$ of array entries $[X_{p'_b}, U_{p'_b,q_{p'_b}}, Y_{i'_a}, V_{i'_a,j_{i'_a}}]$ in D'_{IO}. Then check to see if any value $V_{i_d,j^k_{i_d}}$ for that Y_{i_d} also matches $V_{i'_a,j_{i'_a}}$ for the corresponding $Y_{i'_a}$.

(a) If only a portion of values $V_{i_d,j^k_{i_d}}$, say $V_{i_d,j^{ka}_{i_d}}$, matches some values $V_{i'_a,j_{i'_a}}$ for the values $V_{i_d,j^k_{i_d}}$ is available as candidate design output parameter values. Create a new array entry such that $V_{i_d,j^{ka}_{i'_d}} = V_{i_d,j^{ka}_{i_d}}$, and $V_{i_d,j^{ka}_{i'_d}} =$ '***', where '***' means null value, $k_a \neq k_b$, and $k_a \cup k_b = k$.

(b) If none of the values $V_{i_d,j^k_{i_d}}$ corresponding to design output parameter Y_{i_d} matches any value $V_{i'_a,j_{i'_a}}$ corresponding to equivalent design output parameter $Y_{i'_a}$ in D'_{IO}, then there are no candidate design alternative values for design output parameter Y_{i_d}, and therefore no feasible design output parameter can be recommended.

Let CDPV denote the set of candidate design output parameter values that is identified from $V_{i_d,j^k_{i'_d}}$ for a specific set of customer requirements, with typical element $CDPV_{i_d,k'}$,

$$CDPV_{i_d,k'} = \begin{cases} V_{i_d,j^k_{i_d}} & \text{if and only if } V_{i_d,j^k_{i_d}} = V_{i'_a,j_{i'_a}}; \\ & j^k_{i_d} \in B_i, i_d = 1, 2, \ldots, n, \\ & k = 1, 2, \ldots, B_i; V_{i'_a,j_{i'_a}} \in D'_{IO} \\ *** & \text{otherwise} \end{cases}$$

The collection of candidate design output parameter values CDPV that are identified from the design output parameter values using the set of customer requirements 'Jogging', 'Laces W Rings', 'Air Circulation', 'Slidepre', 'No Preference', and 'Equidcard' for the sport shoe design example is presented in Table 4.

4. Generation of Feasible Design Alternatives

The identified set of candidate design output values in CDPV that satisfy a specific set of customer requirements will be used to generate feasible design alternatives. Since a design alternative is generated by selecting a candidate design output parameter value for each corresponding design output parameter, the set of candidate design output parameter values in CDPV can be used to generate many different design alternatives. However, some design output parameter value combinations may need to be avoided to insure that feasible design alternatives are generated.

Table 4. A collection of candidate design output parameter values for a specific set of customer requirements.

Design output parameter	Candidate design output parameter value CDPV									
Habit feature	No.1	***	***	***	***	***	***	***	***	***
Convenience feature	No.1	No.2	No.3	No.4	No.5	No.6	No.7	No.8	No.9	No.10
Safety feature	No.1	No.2	No.3	No.4	No.5	No.6	No.7	No.8	No.9	***
Vent feature	No.1	No.2	No.3	***	***	***	***	***	***	***
Health feature	No.1	No.2	No.3	***	***	***	***	***	***	***
Outsole struct	***	***	***	***	***	No.6	No.7	***	***	***
Rear moin cover	***	***	***	***	No.5	No.6	***	***	***	***
Lateral orna	No.1	***	No.3	***	***	***	***	***	***	***
Shoe wear	No.1	No.2	No.3	No.4	No.5	No.6	No.7	No.8	No.9	None
Lateral sole	No.1	No.2	No.3	***	***	No.6	No.7	***	***	***
Shoe toe-vamp	No.1	No.2	No.3	No.4	No.5	No.6	No.7	***	***	***
Heel	No.1	No.2	No.3	No.4	No.5	No.6	None	***	***	***

4.1 Pair-wise Feasible Combination Identification

In general, there are three rules that can be used to help identify feasible output parameter value choices in generating a candidate design output parameter value.

Rule 1. The choice of a candidate design output parameter value $V_{i_{d_a}, j_{i_d}^{k_a}}, i_{d_a} \in i_d,\ j_{i_{d_a}} \in j_{i_d}$, for design output parameter $Y_{i_{d_a}}$ requires the selection of one value from an identified subset of the values for some other design output parameter, say $Y_{i_{d_b}}$. This identified subset is a subset of the design output parameter values associated with $Y_{i_{d_b}}$ in which there is at least one design output parameter value. Rule 1 is based on two considerations. (1) If a particular value should be chosen for some design output parameter, then try to use the same value for related design output parameters to reduce cost and increase efficiency for inventory control. (2) As a consequence of the limitations associated with current manufacturing techniques, if a particular value is chosen for some design output parameter, the choice of values that can be used for another design output parameter may be limited.

Let FC denote the set of all feasible pair-wise combinations among design output parameter values, then

$$\mathrm{FC} = \left\{ \left(V_{i_e, j_{i_e}}, V_{i_f, j_{i_f}} \right) \middle| \, i_e, i_f \in B_i;\ i_e, i_f \in n \right\},$$

where $V_{i_e, j_{i_e}}$ represents a choice of values for design output parameter Y_{i_e}, and $V_{i_f, j_{i_f}}$ represents a selection of values for some other design output parameter Y_{i_f} so that each pair of values $(V_{i_e, j_{i_e}}, V_{i_f, j_{i_f}})$ is pair-wise feasible.

To help identify all possible feasible combinations for FC, two special cases of Rule 1 are also described in Rule 2 and Rule 3.

Rule 2. The candidate design output parameter value choice $V_{i_{d_a}, j_{d_a}^k},\ i_{d_a} \in i_d,\ j_{i_{d_a}} \in j_{i_d}$ (could be the value 'NONE'), for design output parameter $Y_{i_{d_a}}$ requires the choice of the value 'NONE' for some other design output parameter, say $Y_{i_{d_b}}$.

Rule 3. The candidate design output parameter value choice $V_{i_{d_a}, j_{i_{d_a}}^k}, i_{d_a} \in i_{d,} j_{i_{d_a}} \in j_{i_d}$, for the design output parameter $Y_{i_{d_a}}$ requires choosing value $V_{i_{d_b}, j_{i_{d_b}}^k}, i_{d_b} \in i_{d,} j_{i_{d_b}} \in j_{i_d}$, for some other design output parameter, say $Y_{i_{d_b}}$, and vice versa. Rule 3 implies that if two or more permissible values for two or more different design output parameters are simultaneously linked, then a specification must be made for the design output parameter values for all of the linked design output parameters at the same time.

Based on the three rules defined above, it is possible to identify a set of design output parameter values that constrain the choice of values for other design output parameters in generating feasible design alternatives.

4.2 Procedures for Feasible Design Alternatives Generation

Once candidate design output parameter values CDPV and feasible combinations among the design output parameter values FC are identified, a procedure can be employed to generate feasible design alternatives.

Let CDA denote an ***n***-dimensional column vector describing a candidate design alternative, with typical element CDA_{i_d}, specifying a value for the design output parameter Y_{i_d}, where $\mathrm{CDA}_{i_d} = V_{i_d, j_{i_d}^k}$, if and only if a value $V_{i_d, j_{i_d}^k}$ in CDPV is chosen; $i_d = 1, 2, \ldots, n$, and $k = 1, 2, \ldots, B_i$.

Similarly, let FDA denote an ***n***-dimensional column vector describing a feasible design alternative, with typical element $\mathrm{FDA}_{i_{d_c}}$ specifying a value for the design output parameter $\mathrm{Y}_{i_{d_c}}$, where $\mathrm{FDA}_{i_{d_c}} = \mathrm{V}_{i_{d_c}, j^k_{i_{d_c}}}$, if any value $\mathrm{V}_{i_d, j^k_{i_d}}$ in CDA is pair-wise feasible or can be modified to be pair-wise feasible; $i_{d_c} = 1, 2, \ldots, n$, and $k = 1, 2, \ldots, \mathrm{B}_i$.

To form FDA, a four-step procedure is developed with choices for a candidate design output parameter value from the first row of CDPV values serving as a starting point. Several alternative procedures could be used to generate candidate design alternatives (CDAs) from use of the back and forth route in the procedure for the generation of candidate design alternatives as shown in Figure 4.

Step 1. A candidate design output parameter value $\mathrm{V}_{i_d, j^k_{i_d}}$ from CDPV is selected as a row entry for a candidate design alternative CDA. In the first pass through Step 1, arbitrarily select a candidate design output parameter value (a value other than '***') from the first CDPV row. In subsequent passes through Step 1, identify an entry in CDA that as yet has no assigned design output parameter value. If all entries in CDA have been assigned a design output parameter value, go to Step 4. If an unassigned CDA entry has been identified, arbitrarily choose a parameter value (other than '***') from the corresponding row of candidate design output parameter values in CDPV, say $\mathrm{V}_{i_{d_a}, j^{k_c}_{i_{d_a}}}$ $i_{d_a} \in i_{d, j_{i_{d_a}}} \in j_{i_d}$, and $k_c \in \mathrm{B}_i$. In each pass through Step 1, place the chosen value $\mathrm{V}_{i_{d_a}, j^{k_c}_{i_{d_a}}}$ in the corresponding entry of FDA as the design output parameter value.

Step 2. The procedure identifies values $\mathrm{V}_{i_f, j_{i_f}}$ from the set of feasible combinations FC that can be selected in conjunction with the value $\mathrm{V}_{i_{d_a}, j^{k_c}_{i_{d_a}}}$ identified in the last pass through Step 1. Let $\mathrm{FC}_{\mathrm{ST}}$ denote the collection of all array entries for pair-wise feasible design output parameter values $\mathrm{V}_{i_f, j_{i_f}}$ with corresponding design output parameters Y_{i_f} that are identified from FC in conjunction with the chosen candidate design output parameter value $\mathrm{V}_{i_{d_a}, j^{k_c}_{i_{d_a}}}$ from CDPV, then $\mathrm{FC}_{\mathrm{ST}} = \{(\mathrm{Y}_{i_f}, \mathrm{V}_{i_f, j_{i_f}}) \mid i_f \in i, \text{ and } j_{i_f} \in j_i\}$. For the value $\mathrm{V}_{i_{d_a}, j^{k_c}_{i_{d_a}}}$ selected in Step 1, check the set of feasible combinations FC to see if the value $\mathrm{V}_{i_{d_a}, j^{k_c}_{i_{d_a}}}$ matches any value $\mathrm{V}_{i_e, j_{i_e}}$ in the array entries $[\mathrm{V}_{i_e, j_{i_e}}, \mathrm{V}_{i_f, j_{i_f}}]$ of FC. If the value $\mathrm{V}_{i_{d_a}, j^{k_c}_{i_{d_a}}}$ does not match any value $\mathrm{V}_{i_e, j_{i_e}}$, then the procedure returns to Step 1 to select another candidate design output parameter value, say $\mathrm{V}_{i_{d_b}, j^{k_c}_{i_{d_b}}}$, $i_{d_b} \in i_d$, $j_{i_{d_b}} \in j_{i_d}$, $k_c \in k$, from CDPV for the next unassigned entry in the candidate design alternative CDA. If the value $\mathrm{V}_{i_{d_a}, j^{k_c}_{i_{d_a}}}$ matches any value $\mathrm{V}_{i_e, j_{i_e}}$ in the array entries $[\mathrm{V}_{i_e, j_{i_e}}, \mathrm{V}_{i_f, j_{i_f}}]$ of FC, then the choice of the value $\mathrm{V}_{i_{d_a}, j^{k_c}_{i_{d_a}}}$ for the corresponding design output parameter $\mathrm{Y}_{i_{d_a}}$ of CDA requires the selection of one of the values $\mathrm{V}_{i_f, j_{i_f}}$ from the array entries $[\mathrm{V}_{i_e, j_{i_e}}, \mathrm{V}_{i_f, j_{i_f}}]$ of FC to create a candidate design alternative. Create a new array entry $[\mathrm{Y}_{i_f}, \mathrm{V}_{i_f, j_{i_f}}]$ in $\mathrm{FC}_{\mathrm{ST}}$ for each identified feasible combination as shown in Table 5.

Step 3. The procedure selects design output parameter values $\mathrm{V}_{i_f, j_{i_f}}$ from the array entries $[\mathrm{Y}_{i_f}, \mathrm{V}_{i_f, j_{i_f}}]$ in $\mathrm{FC}_{\mathrm{ST}}$. For each different design output parameter Y_{i_f} in the array entries $[\mathrm{Y}_{i_f}, \mathrm{V}_{i_f, j_{i_f}}]$ in $\mathrm{FC}_{\mathrm{ST}}$, check to see if any of the related values $\mathrm{V}_{i_f, j_{i_f}}$ appears in the corresponding row of candidate design output parameter values $\mathrm{V}_{i_{d_c}, j^k_{i_{d_c}}}$, $i_{d_c} \in i_d$, $j_{i_{d_c}} \in j_{i_d}$, in CDPV. If none of the values $\mathrm{V}_{i_f, j_{i_f}}$ for design output parameter Y_{i_f} appear in the related row of CDPV, then the search for a feasible value for design output parameter $\mathrm{Y}_{i_{d_c}}$ has failed. The design output parameter value $\mathrm{V}_{i_{d_a}, j^{k_c}_{i_{d_a}}}$ that was selected for the $\mathrm{Y}_{i_{d_a}}$ position in CDA in the last pass through Step 1 is removed, and the procedure returns to Step 1 to make a new design output parameter value selection for $\mathrm{Y}_{i_{d_a}}$. If at least one value $\mathrm{V}_{i_f, j_{i_f}}$ for each different design output parameter Y_{i_f} appears in the related rows of candidate design output parameter values $\mathrm{V}_{i_{d_c}, j^k_{i_{d_c}}}$ in CDPV, then arbitrarily choose a value, say $\mathrm{V}_{i_{d_c}, j^k_{i_{d_c}}}$, $k_d \in k$, where $\mathrm{V}_{i_{d_c}, j^{k_d}_{i_{d_c}}} = \mathrm{V}_{i_f, j_{i_{f_a}}}$, $j_{i_{f_a}} \in j_{i_f}$, from CDPV for each Y_{i_f}. There are three alternative situations that may

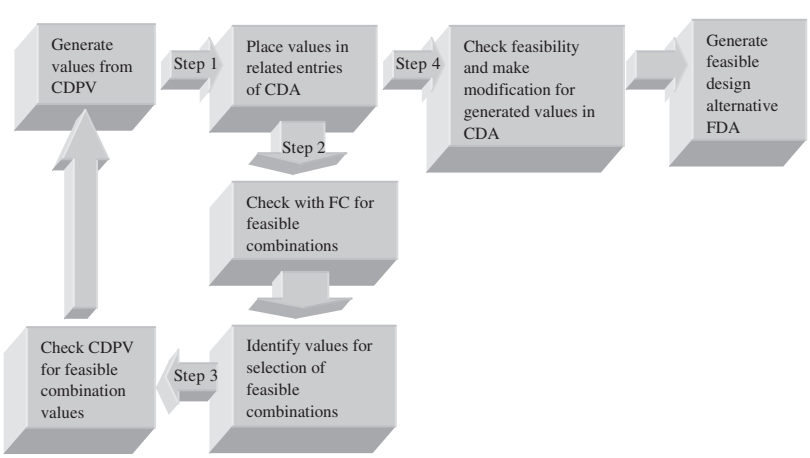

Figure 4. Framework for the generation of a feasible design alternative.

Table 5. Identification of feasible combinations.

Choice of design output parameter value		Feasible pair of design output parameter value	
Design output parameter Y_{i_e}	**Design output parameter value $V_{i_e,j_{i_e}}$**	**Design output parameter Y_{i_f}**	**Design output parameter value $V_{i_f,j_{i_f}}$**
...	...	...	...
HABIT FEATURE	NO.3	SHOE WEAR	NONE
...	...	...	...
CONVENIENCE FEA	NO.6	SHOE WEAR	NO.6
CONVENIENCE FEA	NO.6	SHOE WEAR	NO.7
CONVENIENCE FEA	NO.6	SHOE WEAR	NO.8
CONVENIENCE FEA	NO.9	HEEL	NO.1
CONVENIENCE FEA	NO.9	HEEL	NO.2
CONVENIENCE FEA	NO.9	HEEL	NO.3
CONVENIENCE FEA	NO.9	HEEL	NO.4
CONVENIENCE FEA	NO.9	HEEL	NO.5
...	...	...	...
LATERAL ORNA	NO.4	SHOE WEAR	NO.1
LATERAL ORNA	NO.4	SHOE WEAR	NO.2
LATERAL ORNA	NO.4	SHOE WEAR	NO.3
LATERAL ORNA	NO.4	SHOE WEAR	NO.4
LATERAL ORNA	NO.4	SHOE WEAR	NO.5
LATERAL ORNA	NO.4	SHOE WEAR	NO.9
...	...	...	...

occur for each selected candidate design output parameter value $V_{i_{dc},j_{i_{dc}}^{k_d}}$.

1. If the corresponding entry in CDA as yet has no assigned design output parameter value, then place the value $V_{i_{dc},j_{i_{dc}}^{k_d}}$ in that entry of CDA.
2. If the corresponding entry in CDA has been assigned a design output parameter value from a previous step of the procedure and the assigned value equals $V_{i_{dc},j_{i_{dc}}^{k_d}}$, then return to Step 1 for the next assignment to CDA.
3. If the corresponding entry in CDA has been assigned a design output parameter value from a previous step of procedure and the assigned value differs from $V_{i_{dc},j_{i_{dc}}^{k_d}}$, then return to the entries $[Y_{i_f}, V_{i_f,j_{i_f}}]$ in FC_{ST}. Check to see if there is any other value $V_{i_f,j_{i_f}}$ in the entries $[Y_{i_f}, V_{i_f,j_{i_f}}]$ of FC_{ST} that equals the assigned value. If there is another value, say $V_{i_f,j_{i_{f_b}}}$, $j_{i_{f_b}} \in j_{i_f}$, that equals the assigned value, then the procedure returns to Step 1 for the next assignment to CDA. Otherwise, the design output parameter value $V_{i_{da},j_{i_{da}}^{k_c}}$ that was selected for the $Y_{i_{da}}$ position in CDA in the last pass through Step 1 is removed and the procedure returns to Step 1 to make a new design output parameter value selection for $Y_{i_{da}}$.

The procedure moves back and forth through Step 1, Step 2, and Step 3 until all of the entries in the CDA are filled with design output parameter values. A feasibility checking procedure is employed in Step 4 of the procedure to expand upon the pair-wise determination of feasible choices used in FDA generation. If necessary, Step 4 modifies the CDA elements to insure that the set of design output parameter values constitute a feasible design alternative FDA.

Step 4. The procedure checks feasibility and makes possible modifications to design output parameter values. Each pair of the FC array $[V_{i_e,j_{i_e}}, V_{i_f,j_{i_f}}]$ is used in conjunction with the design output parameter values in CDA to determine if a feasible value $V_{i_f,j_{i_f}}$ is specified in CDA for each $V_{i_e,j_{i_e}}$ in CDA.

Let MDF denote a ***n***-dimensional column vector describing the status of the feasibility checking and modification process for the entries of CDA that were generated from Step 1 to Step 3 of the procedure, with typical element $MDF_{i_{dc}}$,

$$MDF_{i_{dc}} = \begin{cases} U & \text{if the value} V_{i_{dc},j_{i_{dc}}^k} \text{ in CDA is a feasible choice,} \\ R & \text{if the value } V_{i_{dc},j_{i_{dc}}^k} \text{ in CDA is not a feasible choice and must be modified.} \end{cases}$$

Basically, there are four situations that may occur in the feasibility checking procedure for a design alternative that was previously generated in Step 1, Step 2, and Step 3.

1. If a value $V_{i_{dc},j_{i_{dc}}^k}$ in CDA does not match any of the $V_{i_e,j_{i_e}}$ in the array entries $[V_{i_e,j_{i_e}}, V_{i_f,j_{i_f}}]$, then place the

array entry [U] in MDF in the position corresponding to value $V_{i_{dc},j_{i_{dc}}^k}$ in CDA.

2. If a value $V_{i_{dc},j_{i_{dc}}^k}$ in CDA matches a value $V_{i_e,j_{i_e}}$ in the array entries $[V_{i_e,j_{i_e}}, V_{i_f,j_{i_f}}]$ and a pair-wise feasible value $V_{i_f,j_{i_f}}$ is also specified in CDA, then create two array entries [U] in MDF in the positions corresponding to values $V_{i_{dc},j_{i_{dc}}^k}$ and $V_{i_f,j_{i_f}}$ in CDA.
3. If any value $V_{i_{dc},j_{i_{dc}}^k}$ in CDA matches a value $V_{i_e,j_{i_e}}$ in the array entries $[V_{i_e,j_{i_e}}, V_{i_f,j_{i_f}}]$ with some values $V_{i_f,j_{i_f}}$ specified to be pair-wise feasible, but the value, say $V_{i_{de},j_{i_{de}}^{k_e}}$, $i_{de} \in i_d$, $j_{i_{de}} \in j_{i_d}$, $k_e \in k$, in the related CDA entry is not pair-wise feasible with the value $V_{i_{dc},j_{i_{dc}}^k}$, then an infeasible element has been identified. When this situation occurs, select a value, say $V_{i_f,j_{i_{fd}}}$, $j_{i_{fd}} \in j_{i_f}$, from the specified values $V_{i_f,j_{i_f}}$ that appear in the related CDPV row, say $V_{i_{de},j_{i_{de}}^{k_f}}$, $k_f \in k$, to replace $V_{i_{de},j_{i_{de}}^{k_e}}$ in CDA. Create an array entry [U] in MDF in the position corresponding to value $V_{i_{dc},j_{i_{dc}}^k}$ in CDA and an array entry [R] in MDF in the position corresponding to the new feasible value $V_{i_{de},j_{i_{de}}^{k_f}}$ in CDA.
4. In situation 3, if none of the values $V_{i_f,j_{i_f}}$ specified to be pair-wise feasible in conjunction with the value $V_{i_{dc},j_{i_{dc}}^k}$ appear in the related CDPV row, then the procedure returns to Step 1 for the generation of a new feasible design alternative.

Based on the four situations, the feasibility checking procedure examines each CDA entry to determine if any modification is required. An array entry [U] or [R] that corresponds to the CDA entry under examination is then created for MDF. As the CDA entries are examined, the MDF array is also formed. Once an entry has been selected for every MDF element, all of the MDF elements are examined. If all the MDF array entries are filled with [U], then place all the values $V_{i_{dc},j_{i_{dc}}^k}$ of CDA in the corresponding entries of a new array FDA. Thus, the feasibility checking procedure of Step 4 is completed, and the procedure has generated a feasible design alternative. If at least one array entry [R] appears in MDF, then the feasibility checking procedure in Step 4 reexamines each CDA entry to determine if any modification is required, and makes the necessary changes in the array entries for the generated MDF. An array entry [U] in MDF will be replaced by an array entry [R] if the value $V_{i_{dc},j_{i_{dc}}^k}$ in CDA was feasible in the last pass through Step 4 of the feasibility checking procedure but is found to be not feasible on this reexamination and must be modified. An [R] array entry in the MDF will be replaced by a [U] array entry if the value $V_{i_{dc},j_{i_{dc}}^k}$ in the CDA was modified in the last pass through Step 4 but is found to be feasible on this reexamination. Again, once all the elements of CDA have been examined, the array MDF has been reformed. The procedure continues until all the array entries in MDF are filled with [U] and a feasible design alternative FDA is generated. However, if in the process of revising MDF a previously assigned entry [R] in MDF is replaced by a second [R] entry (implying two changes of the same design output parameter value in an attempt to secure feasibility), the procedure returns to Step 1 for the generation of a new candidate design alternative CDA. Figure 5 illustrates how a candidate design alternative is generated and modified into a feasible design alternative using Step 4 of the procedure. The matrix approach incorporating the congruent matrix multiplication in the generation of a feasible design alternative for the sport shoe design is shown in Figure 6.

4.3 Development of the Uniquely Checking Procedure

It is possible that in generating a set of feasible design alternatives for a specific set of customer requirements, the procedure will generate more than one copy of one or more design alternatives. A checking procedure can be used to insure that each feasible design alternative is unique.

Let UNIFDA denote a set of N unique feasible design alternatives, with typical column array UNIFDA_I representing feasible design alternative I, $\text{UNIFDA} = \{\text{FDA}_I \mid I = 1, 2, \ldots, N\}$.

The checking procedure begins by placing all generated values of the first feasible design alternative in the corresponding row entries of the first UNIFDA column. Whenever a new feasible design alternative is generated, all of the design output parameter values are compared with the corresponding row values for each feasible design alternative in UNIFDA. If the comparison shows that the new feasible design alternative is different from any feasible design alternative in UNIFDA, then the new feasible design alternative is added as a new column in UNIFDA; otherwise, the new design alternative is discarded even though it is feasible, and the alternative generation procedure continues until a specified number of unique feasible design alternatives is identified.

5. Conclusions

Customer-oriented product design in CE is critically important to manufacturing but heavily relies on the designer's experience and ideas. When the product designer or design team develops a product design using classical methods, the range of alternatives that are developed is limited by the creativity of the designer or team members. In general, the most important factor influencing the quality and efficiency of product design is the availability of modeling tools and design methods for the designers. Unfortunately, current product design methods emphasize the analysis phase of design solutions rather than the synthesis phase of generating

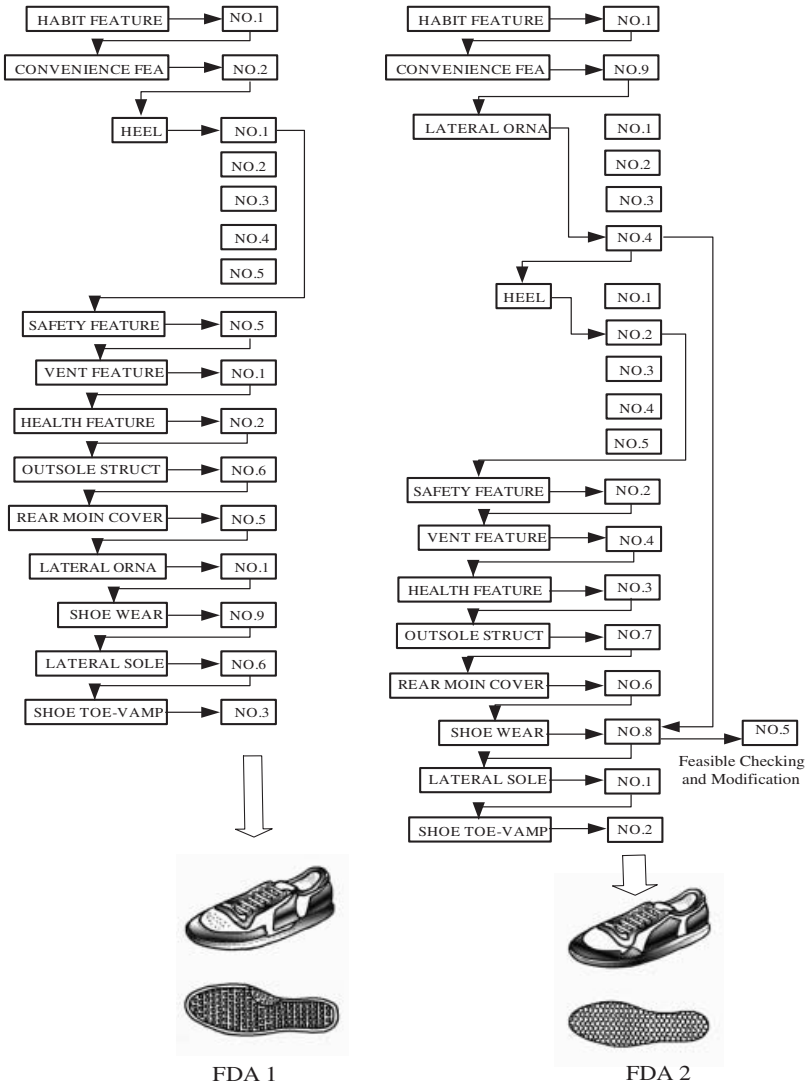

Figure 5. Routes for the generation of feasible design alternatives.

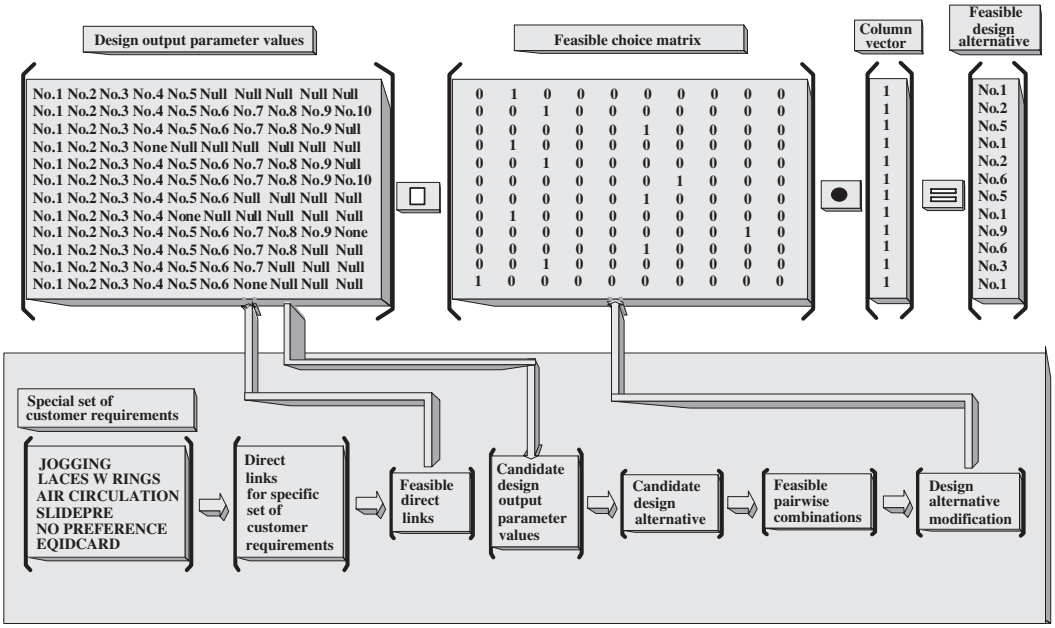

Figure 6. Procedures for the feasible choice matrix generation.

feasible design alternatives. It may be possible to develop product design more efficiently by providing the product designer with a computer-assisted system, which can quickly generate many feasible design alternatives based on customer requirements.

The research effort described in this document developed procedures corresponding to the matrix approach for generating feasible design alternatives and eliminating infeasible design alternatives based on a specific set of customer requirements. A sport shoe design was used as an example to help explain the development of this procedure. The computer programs used in this process were written in Microsoft Visual Basic 6.0. Note that the relational database system concept was used throughout the procedure development.

The matrix approach presented here was successfully applied to the customer-oriented product design for application areas as varied as ball point pens, clothing, electric fans, mice, office chairs, and cell phones. Future studies shall focus on integrating the matrix approach with a graphic representation procedure using the Internet allowing more convenient design communication. In addition, a performance evaluation procedure is considered to help generate enough feasible design alternatives and assess the quality of the recommended designs.

These results provide designers with a useful way to generate feasible design alternatives for evaluation using design automation while still in the process of solving the design problem.

Acknowledgments

The authors are grateful to the National Science Council, Taiwan for supporting this research under grant number NSC85-2213-E006-016. Gratitude is also extended to the reviewers and the Editor for their valuable comments.

References

1. Barton, J.A., Love, D.M. and Taylor, G.D. (2001). Design Determines 70% of Cost? A Review of Implications for Design Evaluation, *Engineering Design*, **12**(1): 47–58.
2. Shehab, E.M. and Abdalla, H.S. (2001). An Integrated Prototype Systems for Cost-Effective Design, *Concurrent Engineering: Research and Applications*, **9**(4): 243–256.
3. Bedworth, D.D., Henderson, M.R. and Wolfe, P.M. (1991). *Computer-integrated Design and Manufacturing*, New York: McGraw-Hill.
4. Huang, G.Q. and Mak, K.L. (2001). Web-Integrated Manufacturing: Recent Developments and Emerging Issues, *Computer Integrated Manufacturing*, **14**(1): 3–13.
5. Tay, F.E.H. and Gu, J. (2002). Product Modeling for Conceptual Design Support, *Computers in Industry*, **48**(2): 143–155.
6. Prasad, B. (1996). *Concurrent Engineering Fundamentals: Integrated Product and Process Organization*, Vol. I, New Jersey: Prentice Hall.
7. Chen, Y.H., Wang, Y.Z. and Wong, M.H. (2001). A Web-Based Fuzzy Mass Customization System, *Manufacturing Systems*, **20**(4): 280–287.
8. Mousavi, A., Adl, P., Gunasekaran, A. and Mirnezami, N. (2001). Customer Optimization Route and Evaluation (CORE) for Product Design, *Computer-Integrated Manufacturing*, **14**(2): 236–243.
9. Chen, C.H., Khoo, L.P. and Yan, W. (2002). Web-Enabled Customer-Oriented Product Concept Formation Via Laddering Technique and Kohonen Association, *Concurrent Engineering: Research and Applications*, **10**(4): 299–310.
10. Ulrich, K.T. and Eppinger, S.D. (2003). *Product Design and Development*, 3rd edn, New York: McGraw-Hill, Inc.
11. Aoussat, A., Christofol, H. and Coq, M.L. (2000). The New Product Design: A Transverse Approach, *Engineering Design*, **11**(4): 399–417.
12. Beakley, G.C. and Chilton, E.G. (1973). *Design: Serving the Needs of Man*, New York: Macmillan Publishing Co., Inc.
13. Jones, C.J. (1992). *Design Methods: Seeds of Human Futures*, 2nd edn, New York: John Wiley & Sons, Ltd.
14. Pahl, G. and Beitz, W. (1996). *Engineering Design: A Systematic Approach*, New York: Springer-Verlag, Ltd.
15. Tseng, M.M. and Jiao, J. (1998). Computer-Aided Requirement Management for Product Definition: A Methodology and Implementation, *Concurrent Engineering: Research and Applications*, **6**(2): 145–160.
16. Cohen, L. (1995). *Quality Function Deployment: How to Make QFD work for You*, Reading: Addison-Wesley.
17. Suh, N.P. (2001). *Axiomatic Design*, New York: Oxford University Press.
18. Jiao, J. and Zhang, Y. (2005). Product Portfolio Identification Based on Association Rule Mining, *Computer-Aided Design*, **37**(2): 149–172.
19. Prasad, B. (2000). A Concurrent Function Deployment Technique for a Workgroup-Based Engineering Design Process, *Engineering Design*, **11**(2): 103–119.
20. Cross, N. (2000). *Engineering Design Methods: Strategies for Product Design*, 3rd edn, Chichester: John Wiley & Sons.
21. Goldman, J. and Leonard, M.S. (1982). Component Design Strategy Permits Selection of Most Suitable Hospital Information System, *Industrial Engineering*, **14**(2): 56–64.
22. Fabbri, T. and Schwab, A.R. (1992). *Practical Database Management*, Boston: PWS-KKENT.
23. Silberschatz, A., Korth, H.F. and Sudarshan, S. (2002). *Database System Concepts*, 4th edn, New York: McGraw-Hill.
24. Howard, R.A. (1971). *Dynamic Probabilistic Systems, Volume I: Markov Models*, New York: John Wiley & Sons.
25. Staros, A. and Schwartz, R.S. (1988). Custom Footwear: The Role of Computer-Aided Engineering, *Testing and Evaluation*, **16**(4): 417–420.
26. Nike Sport Research Laboratory (1983). Rear Foot Control, Cushioning and Shoe Design, *Nike Research Newsletter*, NH 03833.
27. Frederick, E.C. (1984). Physiological and Ergonomics Factors in Running Shoe Design, *Applied Ergonomics*, **15**(4): 281–287.
28. Bunch, R.P. (1988). Foot Measurement Strategies for Fitting Athletes, *Testing and Evaluation*, **16**(4): 407–411.

Ming-Chyuan Lin

Ming-Chyuan Lin is currently an associate professor in the Department of Industrial Design at National Cheng Kung University, Taiwan. He received his BSE in Industrial Design from National Cheng Kung University and MS and PhD in Industrial Engineering from the University of Missouri-Columbia, respectively. His research interests are human factors engineering and computer-integrated design and manufacturing systems.

Lung-An Chen

Lung-An Chen is currently a PhD candidate in the Department of Industrial Design at the National Cheng Kung University, Taiwan. He received his BS in Industrial Design from Da Yeh University, Taiwan and his MS in Industrial Design from National Cheng Kung University, Taiwan, respectively. His research interests are computer graphics, computer-aided design, product design and ergonomics.