HAL
open science

Elasto-plastic Thermal Stress Analysis in Symmetric Thermoplastic Laminates

Hasan Çallioğlu, Onur Sayman, Necati Ataberk

To cite this version:

Hasan Çallioğlu, Onur Sayman, Necati Ataberk. Elasto-plastic Thermal Stress Analysis in Symmetric Thermoplastic Laminates. Journal of Thermoplastic Composite Materials, 2005, 18 (1), pp.59-76. 10.1177/0892705705041155 . hal-00570791

HAL Id: hal-00570791

https://hal.science/hal-00570791v1

Submitted on 1 Mar 2011

HAL is a multi-disciplinary open access archive for the deposit and dissemination of scientific research documents, whether they are published or not. The documents may come from teaching and research institutions in France or abroad, or from public or private research centers.

L'archive ouverte pluridisciplinaire **HAL**, est destinée au dépôt et à la diffusion de documents scientifiques de niveau recherche, publiés ou non, émanant des établissements d'enseignement et de recherche français ou étrangers, des laboratoires publics ou privés.

Elasto-plastic Thermal Stress Analysis in Symmetric Thermoplastic Laminates

HASAN ÇALLIOĞLU*
Department of Mechanical Engineering
Pamukkale University, Çamlık, Denizli

ONUR SAYMAN
Department of Mechanical Engineering
Dokuz Eylül University, 35100, Bornova, İzmir

NECATI ATABERK
Sarayönü Vocational Training School
Selçuk University, Konya, Turkey

ABSTRACT: In this study, a thermal elastic–plastic stress analysis is carried out in steel fiber-reinforced symmetric thermoplastic laminated plates. The material is assumed to be strain-hardening. The orientation angles are chosen as, $(0°/90°)_s$, $(30°/-30°)_s$, $(45°/-45°)_s$, $(60°/-60°)_s$, $(15°/0°)_s$, $(30°/0°)_s$, $(45°/0°)_s$, $(60°/0°)_s$, $(75°/0°)_s$. The Tsai–Hill theory is used as a yield criterion in the solution. Temperature distribution is chosen as $+T_0$ and $-T_0$ at the upper and lower surfaces, respectively. It is found that plastic yielding occurs at the same temperature; all the orientation angles and the plastic region expands the same at the same temperature.

KEY WORDS: thermal stress analysis, residual stresses, laminated plates, thermoplastic composites.

INTRODUCTION

THERMAL STRESSES ARE important in engineering design since they can lead to premature failure or plastic yielding in structures. Noda et al. [1] gave the elastic thermal stress analysis of structures. Avila and Tamma [2]

*Author to whom correspondence should be addressed. E-mail: hcallioglu@pamukkale.edu.tr

0892-7057/05/01 0059–18 $10.00/0 DOI: 10.1177/0892705705041155
© 2005 Sage Publications

carried out an integrated micro/macro thermo-elastic-viscoplastic analysis on laminate metal matrix composites. Kim et al. [3] proposed a method to actively control interlaminar stresses near the free edges of laminated composites by through-thickness thermal gradients. Barnes [4] examined the thermal expansion behaviour of thermoplastic composites. Wang et al. [5] presented an analytical method in order to determine the thermal residual stresses in an isotropic plate reinforced with a circular orthotropic patch.

Thermal residual stresses in composites are also important, since they may lead to premature failure or may increase the strength of the structures. Hu and Weng [6] examined the influence of thermal residual stresses on the deformation of a composite by a new micromechanical method. Trende et al. [7] investigated residual stresses and dimensional changes in the compression moulded glass-mat-reinforced thermoplastic (GMT) parts. Akay and Özden [8] measured thermal residual stresses in injection-moulded thermoplastics by removing thin layers from specimens. Jeronimidis and Parkyn [9] examined residual thermal stresses in carbon-fiber thermoplastic matrix laminates. Unger and Hansen [10] presented a method which accounts for the effect of the process-induced thermal residual stresses on the free-edge delamination behavior of fiber-reinforced laminates. Sayman et al. [11–13] investigated elastic–plastic and residual stresses in beams under single or uniform distributed external forces by using analytical methods. Bektaş and Sayman [14] performed an elasto-plastic stress analysis in symmetric thermoplastic laminated plates under uniform temperature distribution, where the composite material was assumed to be nonstrain hardening.

In the present study, it is assumed that the material has to be strain hardening and temperature changes linearly along the sections of plates, being $+T_0$ at the upper surface and $-T_0$ at the lower surface. Elastic–plastic and residual stresses are determined by using both analytical and numerical methods in thermoplastic symmetric $(0°/90°)_s$, $(30°/-30°)_s$, $(45°/-45°)_s$, $(60°/-60°)_s$, $(15°/0°)_s$, $(30°/0°)_s$, $(45°/0°)_s$, $(60°/0°)_s$, $(75°/0°)_s$, laminated plates. The moment resultants are considered in this study.

THERMAL STRESS ANALYSIS

Thermal stresses arise and must be accounted for at temperatures different from the design operating temperatures. To simplify the analysis, it is assumed that the thermal stresses are zero in the symmetric plates at 0°C considered as reference temperature. The symmetric laminated plate is shown in Figure 1. The dimensions of the plates are chosen $100 \times 100\,\text{mm}^2$ in order to prevent buckling. The temperature varies linearly, which is $+T_0$

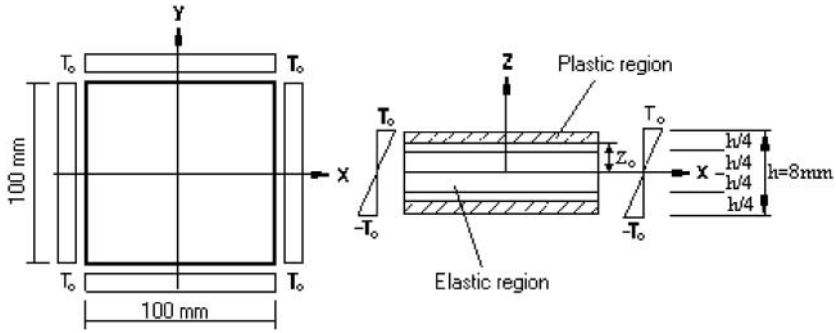

Figure 1. *Symmetric thermoplastic composite laminated plate under thermal load, (h-plate thickness).*

and $-T_0$ at the upper and lower surfaces, respectively. The temperature at any point is written as,

$$T = \frac{2T_0 z}{h} \tag{1}$$

where z is the distance between this point and the middle surface of the plate, h is the thickness of the plate.

The total strains along the principal material axes in the specially orthotropic lamina are obtained by summing the mechanical strains due to applied stresses [15],

$$\begin{Bmatrix} \varepsilon_1 \\ \varepsilon_2 \\ \gamma_{12} \end{Bmatrix} = \begin{bmatrix} S_{11} & S_{12} & 0 \\ S_{12} & S_{22} & 0 \\ 0 & 0 & S_{66} \end{bmatrix} \begin{Bmatrix} \sigma_1 \\ \sigma_2 \\ \tau_{12} \end{Bmatrix} + \begin{Bmatrix} \alpha_1 \\ \alpha_2 \\ 0 \end{Bmatrix} T \tag{2}$$

where S is the elements of compliance matrix, or in matrix notation,

$$\{\varepsilon\} = [S]\{\sigma\} + \{\alpha\}T \tag{3}$$

The stresses are given by an inverse manipulation,

$$\{\sigma\} = [Q][\{\varepsilon\} - \{\alpha\}T] \tag{4}$$

If the material is completely restrained during thermal exposure, however the total strain must be zero. Thus,

$$\{\sigma\} = [Q](-\{\alpha\}T) \tag{5}$$

The stress–strain relation for the generally orthotropic case is written as,

$$\begin{Bmatrix} \sigma_x \\ \sigma_y \\ \tau_{xy} \end{Bmatrix} = \begin{bmatrix} \overline{Q}_{11} & \overline{Q}_{12} & \overline{Q}_{16} \\ \overline{Q}_{12} & \overline{Q}_{22} & \overline{Q}_{26} \\ \overline{Q}_{16} & \overline{Q}_{26} & \overline{Q}_{66} \end{bmatrix}_k \begin{Bmatrix} -\alpha_x \\ -\alpha_y \\ -\alpha_{xy} \end{Bmatrix}_k T \tag{6}$$

where $\overline{Q}_{ij}$ are the transformed reduced stiffnesses, and transformed thermal expansion coefficients are written as,

$$\begin{aligned} \alpha_x &= \alpha_1 \cos^2\theta + \alpha_2 \sin^2\theta \\ \alpha_y &= \alpha_1 \sin^2\theta + \alpha_2 \cos^2\theta \\ \alpha_{xy} &= 2(\alpha_1 - \alpha_2)\sin\theta\cos\theta \end{aligned} \tag{7}$$

where θ is the orientation angle between the x–y and 1–2 axes. For a perfectly restrained laminate the resultant forces, N^T, under thermal loading is written as,

$$\{N^T\} = \begin{Bmatrix} N_x^T \\ N_y^T \\ N_{xy}^T \end{Bmatrix} = \int \begin{bmatrix} \overline{Q}_{11} & \overline{Q}_{12} & \overline{Q}_{16} \\ \overline{Q}_{12} & \overline{Q}_{22} & \overline{Q}_{26} \\ \overline{Q}_{16} & \overline{Q}_{26} & \overline{Q}_{66} \end{bmatrix}_k \begin{Bmatrix} -\alpha_x \\ -\alpha_y \\ -\alpha_{xy} \end{Bmatrix}_k T dz \tag{8}$$

and moment resultants,

$$\{M^T\} = \begin{Bmatrix} M_x^T \\ M_y^T \\ M_{xy}^T \end{Bmatrix} = \int \begin{bmatrix} \overline{Q}_{11} & \overline{Q}_{12} & \overline{Q}_{16} \\ \overline{Q}_{12} & \overline{Q}_{22} & \overline{Q}_{26} \\ \overline{Q}_{16} & \overline{Q}_{26} & \overline{Q}_{66} \end{bmatrix}_k \begin{Bmatrix} -\alpha_x \\ -\alpha_y \\ -\alpha_{xy} \end{Bmatrix}_k T z dz \tag{9}$$

The resultant forces, N^T, is zero due to this type of thermal loading. The resultant moments can be written in the matrix form as,

$$\{M^T\} = [D]\{\kappa\} \tag{10}$$

The curvatures are obtained by an inverse manipulation;

$$\{\kappa\} = [D]^{-1}\{M^T\} \tag{11}$$

The stress components are written at any point, z, as,

$$\begin{Bmatrix} \sigma_x \\ \sigma_y \\ \tau_{xy} \end{Bmatrix} = \begin{bmatrix} \overline{Q}_{11} & \overline{Q}_{12} & \overline{Q}_{16} \\ \overline{Q}_{12} & \overline{Q}_{22} & \overline{Q}_{26} \\ \overline{Q}_{16} & \overline{Q}_{26} & \overline{Q}_{66} \end{bmatrix} z \begin{Bmatrix} \kappa_x \\ \kappa_y \\ \kappa_{xy} \end{Bmatrix} \tag{12}$$

The stress components in the principal material directions have to be determinated in order to find plastic yielding

$$\begin{Bmatrix} \sigma_1 \\ \sigma_2 \\ \tau_{12} \end{Bmatrix} = \begin{bmatrix} m^2 & n^2 & 2mn \\ n^2 & m^2 & -2mn \\ -mn & mn & m^2 - n^2 \end{bmatrix} \begin{Bmatrix} \sigma_x \\ \sigma_y \\ \tau_{xy} \end{Bmatrix} \tag{13}$$

where $m = \cos\theta$, $n = \sin\theta$, θ is the orientation angle between x–y and 1–2 axes.

PLASTIC SOLUTION

Elastic–plastic solution is carried out for small plastic deformations. Tsai–Hill theory is used as a yield criterion due to the same yield strengths of the composite layers in tension and compression. X, Y are the yield points in 1 and 2 directions and S is the shear strength in 1–2 plane. It is assumed that the yield strength in the third direction to be equal to the yield strength (Y) in the transverse direction. The shear strengths in the 1–3 and 2–3 planes are assumed to be equal to S. The equivalent strength in the first principal material direction can be written as,

$$\bar{\sigma}^2 = \sigma_1^2 - \sigma_1\sigma_2 + \sigma_2^2 \frac{X^2}{Y^2} + \tau_{12}^2 \frac{X^2}{S^2} \tag{14}$$

When the equivalent stress reaches the yield strength X, plastic yielding begins. The strain increments are obtained by the potential function as [16],

$$\begin{Bmatrix} d\varepsilon_1^p \\ d\varepsilon_2^p \\ d\varepsilon_{12}^p \end{Bmatrix} = \begin{Bmatrix} \dfrac{\partial f}{\partial \sigma_1} d\lambda \\ \dfrac{\partial f}{\partial \sigma_2} d\lambda \\ \dfrac{\partial f}{\partial \sigma_3} d\lambda \end{Bmatrix} \tag{15}$$

where $f = \bar{\sigma} - \sigma_Y(\varepsilon_p)$, $d\lambda$ is equal to the equivalent plastic strain increment. The stress–strain relation is given by Ludwik equation as,

$$\sigma_Y = \sigma_0 + K\varepsilon_p^n \tag{16}$$

where σ_0 is equal to X and K is the plasticity constant, n is the strain hardening parameter.

The total strain increments in the principal material directions are written as,

$$\begin{aligned} d\varepsilon_1 &= a_{11}d\sigma_1 + a_{12}d\sigma_2 + \frac{2\sigma_1 - \sigma_2}{2\bar{\sigma}}d\varepsilon_p + \alpha_1 dT \\ d\varepsilon_2 &= a_{12}d\sigma_1 + a_{22}d\sigma_2 + \frac{-\sigma_1 + 2\sigma_2(X^2/Y^2)}{2\bar{\sigma}}d\varepsilon_p + \alpha_2 dT \\ d\varepsilon_{12} &= \frac{a_{16}}{2}d\tau_{12} + 2\tau_{12}\frac{X^2/S^2}{2\bar{\sigma}}d\varepsilon_p \end{aligned} \tag{17}$$

They can be transformed to the x–y axes by using the transformation formula,

$$\begin{Bmatrix} d\varepsilon_x \\ d\varepsilon_y \\ d\varepsilon_{xy} \end{Bmatrix} = \begin{bmatrix} m^2 & n^2 & -2mn \\ n^2 & m^2 & 2mn \\ mn & -mn & (m^2 - n^2) \end{bmatrix} \begin{Bmatrix} d\varepsilon_1 \\ d\varepsilon_2 \\ d\varepsilon_{12} \end{Bmatrix} \tag{18}$$

where $m = \cos\theta$, $n = \sin\theta$. ε_x, ε_y and ε_{xy} are zero due to the perfectly restrained boundary conditions of the laminated plate. As a result of this, $d\varepsilon_x$, $d\varepsilon_y$ and $d\varepsilon_{xy}$ are equal to zero. They are written as

$$\begin{aligned} d\varepsilon_x &= (a_{11}m^2 + a_{12}n^2)d\sigma_1 + (a_{12}m^2 + a_{22}n^2)d\sigma_2 - a_{66}mnd\tau_{12} \\ &\quad + \left(\frac{2\sigma_1 - \sigma_2}{2\bar{\sigma}}m^2 + \frac{-\sigma_1 + 2\sigma_2(X^2/Y^2)}{2\bar{\sigma}}n^2 - \frac{4\tau_{12}(X^2/Y^2)}{2\bar{\sigma}}mn\right)d\varepsilon_p \\ &\quad + \left(\alpha_1 m^2 + \alpha_2 n^2\right)dT = 0 \\ d\varepsilon_y &= (a_{11}n^2 + a_{12}m^2)d\sigma_1 + (a_{12}n^2 + a_{22}m^2)d\sigma_2 + a_{66}mnd\tau_{12} \\ &\quad + \left(\frac{2\sigma_1 - \sigma_2}{2\bar{\sigma}}n^2 + \frac{-\sigma_1 + 2\sigma_2(X^2/Y^2)}{2\bar{\sigma}}m^2 + \frac{4\tau_{12}(X^2/S^2)}{2\bar{\sigma}}mn\right)d\varepsilon_p \\ &\quad + \left(\alpha_1 n^2 + \alpha_2 m^2\right)dT = 0 \\ d\varepsilon_{xy} &= (a_{11} - a_{12})mnd\sigma_1 + (a_{12} - a_{22})mnd\sigma_2 + \frac{a_{66}}{2}(m^2 - n^2)d\tau_{12} \\ &\quad + \left[\frac{2\sigma_1 - \sigma_2}{2\bar{\sigma}}mn - \frac{-\sigma_1 + 2\sigma_2(X^2/Y^2)}{2\bar{\sigma}}mn + \frac{2\tau_{12}(X^2/S^2)}{2\bar{\sigma}}(m^2 - n^2)\right]d\varepsilon_p \\ &\quad + (\alpha_1 - \alpha_2)mndT = 0 \end{aligned} \tag{19}$$

The yield criterion can be evaluated in the differential form,

$$(2\sigma_1 - \sigma_2)d\sigma_1 + \left(-\sigma_1 + 2\sigma_2\frac{X^2}{Y^2}\right)d\sigma_2 + 2\tau_{12}\frac{X^2}{S^2}d\tau_{12} - 2K\bar{\sigma}n\varepsilon_p^{n-1}d\varepsilon_p = 0 \tag{20}$$

The solution of these equations may be undeterminable. Therefore, the solution is carried out by using a numerical method. They are written in the differential and symbolic form as,

$$\begin{aligned}
\Delta\varepsilon_x &= a_1\Delta\sigma_1 + b_1\Delta\sigma_2 + c_1\Delta\tau_{12} + d_1\Delta\varepsilon_p + e_1\Delta T = 0\\
\Delta\varepsilon_y &= a_2\Delta\sigma_1 + b_2\Delta\sigma_2 + c_2\Delta\tau_{12} + d_2\Delta\varepsilon_p + e_2\Delta T = 0\\
\Delta\varepsilon_{xy} &= a_3\Delta\sigma_1 + b_3\Delta\sigma_2 + c_3\Delta\tau_{12} + d_3\Delta\varepsilon_p + e_3\Delta T = 0\\
& a_4\Delta\sigma_1 + b_4\Delta\sigma_2 + c_4\Delta\tau_{12} + d_4\Delta\varepsilon_p = 0
\end{aligned} \tag{21}$$

The above equations can be written in the matrix form,

$$\begin{bmatrix} a_1 & b_1 & c_1 & d_1\\ a_2 & b_2 & c_2 & d_2\\ a_3 & b_3 & c_3 & d_3\\ a_4 & b_4 & c_4 & d_4 \end{bmatrix}\begin{Bmatrix} \Delta\sigma_1\\ \Delta\sigma_2\\ \Delta\tau_{12}\\ \Delta\varepsilon_p \end{Bmatrix} = \begin{Bmatrix} -e_1\\ -e_2\\ -e_3\\ 0 \end{Bmatrix}\Delta T \tag{22}$$

or symbolically as $[A]\{\Delta\sigma\} = \{C\}$.

$\triangle T$ is chosen to be a small value per load step during the solution. $\triangle\sigma_1$, $\triangle\sigma_2$, $\triangle\tau_{12}$ and $\triangle\varepsilon_p$ are obtained by using the inverse of the matrix as, $\{\Delta\sigma\} = [A]^{-1}\{C\}$.

The strain components and the equivalent plastic strain are calculated for 1000 load steps in different temperatures,

$$\begin{aligned}
\sigma_1^{(i)} &= \sigma_1^{(i-1)} + \Delta\sigma_1^{(i)}\\
\sigma_2^{(i)} &= \sigma_2^{(i-1)} + \Delta\sigma_2^{(i)}\\
\tau_{12}^{(i)} &= \tau_{12}^{(i-1)} + \Delta\tau_{12}^{(i)}\\
\varepsilon_p^{(i)} &= \varepsilon_p^{(i-1)} + \Delta\varepsilon_p^{(i)}
\end{aligned} \tag{23}$$

where i is the number of the load step.

RESIDUAL STRESSES

To find the residual stresses it is necessary to superpose on the stress system due to $+T$, a completely elastic system due to temperature $-T$. The load obtained during the plastic solution is applied in the opposite direction in order to find the complete elastic solution. The residual stresses have to be in static equilibrium due to the zero external forces. The resultant moments per unit length after plastic solution are written as,

$$\begin{Bmatrix} M_x^p \\ M_y^p \\ M_{xy}^p \end{Bmatrix} = \int \begin{Bmatrix} \sigma_x^p \\ \sigma_y^p \\ \tau_{xy}^p \end{Bmatrix}_k z dz \tag{24}$$

The resultant moments at the beginning of plastic yielding are written as,

$$\begin{Bmatrix} M_x^e \\ M_y^e \\ M_{xy}^e \end{Bmatrix} = \int \begin{Bmatrix} \sigma_x^e \\ \sigma_y^e \\ \tau_{xy}^e \end{Bmatrix}_k z dz \tag{25}$$

These two moments, in Equations (24) and (25), are similar when the temperature is released or it can be said that the slope of the loading and unloading curves is the same. When the temperature at the upper and lower surfaces attains to zero degree, the elastic stress components are calculated as,

$$\begin{aligned} \sigma_x &= \frac{(\sigma_x)^e M_x^p}{M_x^e} \\ \sigma_y &= \frac{(\sigma_y)^e M_y^p}{M_y^e} \\ \tau_{xy} &= \frac{(\tau_{xy})^e M_{xy}^p}{M_{xy}^e} \end{aligned} \tag{26}$$

where

$$\begin{Bmatrix} (\sigma_x)^e \\ (\sigma_y)^e \\ (\tau_{xy})^e \end{Bmatrix}_k = \begin{bmatrix} Q_{11} & Q_{12} & Q_{16} \\ Q_{12} & Q_{22} & Q_{26} \\ Q_{16} & Q_{26} & Q_{66} \end{bmatrix}_k \begin{Bmatrix} \kappa_x \\ \kappa_y \\ \kappa_{xy} \end{Bmatrix} z \tag{27}$$

The superposition of the elastic stresses and plastic stresses gives the residual stress components as,

$$\begin{aligned} \sigma_x^r &= \sigma_x^p - \sigma_x^e \\ \sigma_y^r &= \sigma_y^p - \sigma_y^e \\ \tau_{xy}^r &= \tau_{xy}^p - \tau_{xy}^e \end{aligned} \tag{28}$$

These stresses satisfy the static equilibrium in the laminated plates.

A SAMPLE AND DISCUSSION

In the present study, symmetric steel fiber-reinforced thermoplastic laminates are used. The mechanical properties of a layer are given in Table 1, where t is the thickness of a layer. The melting point of the material is 190°C. The laminate is composed of four layers in the symmetric form. The solution is performed for the strain hardening case. It is assumed that the mechanical properties do not change with increasing the temperature. The stress components at the yield point are given at Table 2. It is seen in this table that plastic yielding occurs in all the layers at the same temperature, as 27.06°C. The incremental solution is carried out for 1000 thermal integration intervals in the $(0°/90°)_s$, $(30°/-30°)_s$, $(45°/-45°)_s$ and $(60°/-60°)_s$ stacking sequences. During the solution, the distance between the middle surface and the boundary of the plastic region (z_0) is chosen as 3.5, 3.0, 2.5, 2.0, 1.5, 1.0 mm.

Table 1. Mechanical properties and yield strengths of a composite layer.

E_1 (MPa)	E_2 (MPa)	G_{12} (MPa)	ν_{12}	Axial strength X (MPa)	Transverse strength Y (MPa)	Shear strength S (MPa)	t (mm)	n	K (MPa)	Thermal expansion coefficient (1/°C)	
										α_1	α_2
38000	1300	360	0.28	37	5	13	2	0.630	99	13E-06	131E-06

Table 2. Stress components at the beginning of plastic yielding.

Orientations	T (°C)	σ_x (MPa)	σ_y (MPa)	τ_{xy} (MPa)
$(0°/90°)_s$	27.06	−14.55	−4.73	0.00
$(30°/-30°)_s$	27.06	−12.09	−7.19	−4.25
$(45°/-45°)_s$	27.06	−9.64	−9.64	−4.91
$(60°/-60°)_s$	27.06	−7.19	−12.09	−4.25

Table 3. Elastic–plastic and residual stress components and equivalent plastic strain at the upper surface.

				Plastic stresses			Residual stresses		
θ Orientation	z_0 (mm)	T (°C)	$\varepsilon_p \times 10^{-3}$	$(\sigma_x)_p$ (MPa)	$(\sigma_y)_p$ (MPa)	$(\tau_{xy})_p$ (MPa)	$(\sigma_x)_r$ (MPa)	$(\sigma_y)_r$ (MPa)	$(\tau_{xy})_r$ (MPa)
$(0°/90°)_s$	3.5	30.92	0.1	−15.49	−4.74	0.00	0.90	0.57	0.00
	3.0	36.07	0.2	−16.59	−4.72	0.00	1.74	1.14	0.00
	2.5	43.29	0.3	−17.94	−4.70	0.00	2.52	1.74	0.00
	2.0	54.11	0.5	−19.60	−4.66	0.00	3.24	2.41	0.00
	1.5	72.15	0.9	−21.64	−4.62	0.00	4.04	3.19	0.00
	1.0	108.22	1.6	−24.10	−4.62	0.00	5.12	4.15	0.00
$(30°/-30°)_s$	3.5	30.92	0.1	−12.80	−7.42	−4.66	0.83	0.64	0.15
	3.0	36.07	0.2	−13.62	−7.69	−5.14	1.63	1.23	0.29
	2.5	43.29	0.3	−14.63	−8.01	−5.73	2.43	1.77	0.40
	2.0	54.11	0.5	−15.86	−8.39	−6.47	3.28	2.28	0.47
	1.5	72.15	0.9	−17.38	−8.87	−7.37	4.30	2.78	0.53
	1.0	108.22	1.6	−19.23	−9.49	−8.44	5.72	3.34	0.65
$(45°/-45°)_s$	3.5	30.92	0.1	−10.11	−10.11	−5.38	0.73	0.73	0.17
	3.0	36.07	0.2	−10.66	−10.66	−5.94	1.43	1.43	0.33
	2.5	43.29	0.3	−11.32	−11.32	−6.62	2.10	2.10	0.46
	2.0	54.11	0.5	−12.13	−12.13	−7.47	2.78	2.78	0.54
	1.5	72.15	0.9	−13.13	−13.13	−8.51	3.54	3.54	0.62
	1.0	108.22	1.6	−14.36	−14.36	−9.74	4.53	4.53	0.75
$(60°/-60°)_s$	3.5	30.92	0.1	−7.42	−12.80	−4.66	0.64	0.83	0.15
	3.0	36.07	0.2	−7.69	−13.62	−5.14	1.23	1.63	0.29
	2.5	43.29	0.3	−8.01	−14.63	−5.73	1.77	2.43	0.40
	2.0	54.11	0.5	−8.39	−15.86	−6.47	2.28	3.28	0.47
	1.5	72.15	0.9	−8.87	−17.39	−7.37	2.78	4.30	0.53
	1.0	108.22	1.6	−9.49	−19.23	−8.44	3.34	5.72	0.65

The elastic–plastic, residual stresses and the equivalent plastic strain at the upper surface are given at Table 3. The temperature and the equivalent plastic strain are the same for the same plastic expansion of all the laminates. It is seen that the stress components increase with the increase of the temperature. They are maximum at the lower and upper surfaces and at the boundary of the elastic and plastic regions. The temperature at the upper and lower surfaces ($+T_0$ or $-T_0$) is the same in all the laminated plates for the same boundary of the plastic zone (z_0). The equivalent stress in the principal material directions for the plastic stresses is found to be the same at the same temperature for all the stacking sequences. It is also found that the equivalent plastic strain is the same per each temperature for all the stacking sequences. When the plastic region is further expanded, the magnitudes of the stress components become higher. The equivalent stress

of the residual stress components in the principal material directions is obtained to be the highest for the cross-ply, $(0°/90°)_s$, laminated plate since it possesses the most different material properties between layers in the x and y directions. As a result of this, the most different material properties such as stiffnesses and thermal expansions between layers produce the highest equivalent stress when the temperature is released. The elastic–plastic and residual stresses and the equivalent plastic strain are given at Table 4 for $(15°/0°)_s$, $(30°/0°)_s$, $(45°/0°)_s$, $(60°/0°)_s$, and $(75°/0°)_s$,

Table 4. Elastic–plastic and residual stress components, and equivalent plastic strain at the upper surface for, $(\theta°/0°)_s$, orientations.

				Plastic stresses			Residual stresses		
θ Orientation	z_0 (mm)	T (°C)	$\varepsilon_p \times 10^{-3}$	$(\sigma_x)_p$ (MPa)	$(\sigma_y)_p$ (MPa)	$(\tau_{xy})_p$ (MPa)	$(\sigma_x)_r$ (MPa)	$(\sigma_y)_r$ (MPa)	$(\tau_{xy})_r$ (MPa)
$(15°/0°)_s$	3.5	30.92	0.1	−14.77	−5.46	−2.69	0.90	0.57	0.09
	3.0	36.07	0.2	−15.80	−5.52	−2.97	1.79	1.07	0.19
	2.5	43.29	0.3	−17.05	−5.58	−3.31	2.69	1.51	0.29
	2.0	54.11	0.5	−18.60	−5.66	−3.73	3.68	1.86	0.40
	1.5	72.15	0.9	−20.50	−5.76	−4.26	4.92	2.13	0.57
	1.0	108.22	1.6	−22.80	−5.92	−4.87	6.70	2.31	0.84
$(30°/0°)_s$	3.5	30.92	0.1	−12.80	−7.42	−4.66	0.83	0.63	0.16
	3.0	36.07	0.2	−13.62	−7.69	−5.14	1.65	1.20	0.32
	2.5	43.29	0.3	−14.63	−8.01	−5.73	2.49	1.69	0.50
	2.0	54.11	0.5	−15.86	−8.39	−6.47	3.41	2.11	0.70
	1.5	72.15	0.9	−17.39	−8.87	−7.37	4.54	2.47	0.98
	1.0	108.22	1.6	−19.23	−9.49	−8.44	6.14	2.80	1.46
$(45°/0°)_s$	3.5	30.92	0.1	−10.11	−10.11	−5.38	0.74	0.72	0.18
	3.0	36.07	0.2	−10.66	−10.66	−5.94	1.48	1.38	0.37
	2.5	43.29	0.3	−11.32	−11.32	−6.62	2.22	1.96	0.58
	2.0	54.11	0.5	−12.13	−12.13	−7.47	3.05	2.48	0.81
	1.5	72.15	0.9	−13.13	−13.13	−8.51	4.04	2.97	1.13
	1.0	108.22	1.6	−14.36	−14.36	−9.74	5.40	3.54	1.68
$(60°/0°)_s$	3.5	30.92	0.1	−7.42	−12.80	−4.66	0.65	0.81	0.16
	3.0	36.07	0.2	−7.69	−13.62	−5.14	1.31	1.56	0.32
	2.5	43.29	0.3	−8.01	−14.63	−5.73	1.97	2.24	0.50
	2.0	54.11	0.5	−8.39	−15.86	−6.47	2.70	2.86	0.70
	1.5	72.15	0.9	−8.87	−17.39	−7.37	3.58	3.50	0.98
	1.0	108.22	1.6	−9.49	−19.23	−8.44	4.72	4.32	1.46
$(75°/0°)_s$	3.5	30.92	0.1	−5.46	−14.77	−2.69	0.59	0.88	0.09
	3.0	36.07	0.2	−5.52	−15.80	−2.97	1.19	1.69	0.19
	2.5	43.29	0.3	−5.58	−17.05	−3.31	1.80	2.44	0.29
	2.0	54.11	0.5	−5.66	−18.60	−3.73	2.48	3.14	0.40
	1.5	72.15	0.9	−5.76	−20.50	−4.26	3.28	3.89	0.57
	1.0	108.22	1.6	−5.92	−22.80	−4.87	4.28	4.90	0.84

orientations. It is seen that all the temperatures and the equivalent plastic strains are the same as those in Table 3. It is also found that when the difference between the 0° and the other orientation angle is increased, the equivalent stress in the principal material directions reaches high values, due to different material properties between the layers. The equivalent stress is the highest for, $(75°/0°)_s$, orientation.

The distribution of the plastic stress components of σ_x and σ_y in the symmetric cross-ply, $(0°/90°)_s$, laminated plate along the cross sections per z_0 (1, 2, 3 mm) is shown in Figure 2. As shown in this figure, the magnitude of the equivalent stress of the plastic stresses is the highest at the upper and lower surfaces. However, the magnitude of the equivalent stress of the residual stress components is the highest at the upper and lower surfaces, and at or around the boundary of the elastic and plastic regions, as shown in Figure 3. When the plastic zone is further expanded, the magnitudes of the residual stress components of σ_x and σ_y increase. It is seen from Figures 2 and 3 that the stresses have a jump across the interface of the layers with different orientation angles, especially cross-ply laminated plate, since the stiffness of each ply is different. On the other hand, the analysis is shown continuous linear stress variation along the cross section of angle-ply laminated plate.

The distribution of the residual stress components of σ_x and σ_y in the symmetric angle-ply, $(30°/-30°)_s$, laminated plate is shown in Figure 4.

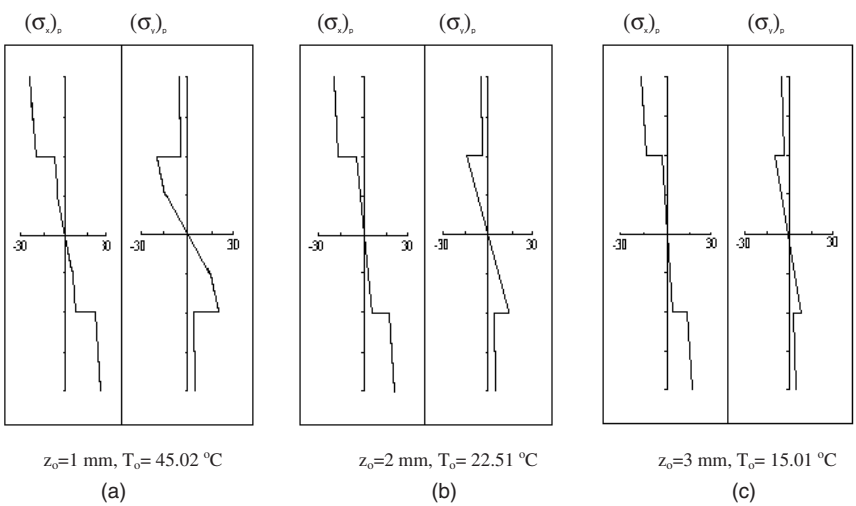

Figure 2. *The distribution of the plastic stress components of σ_x and σ_y for the cross-ply orientation, $(0°/90°)_s$.*

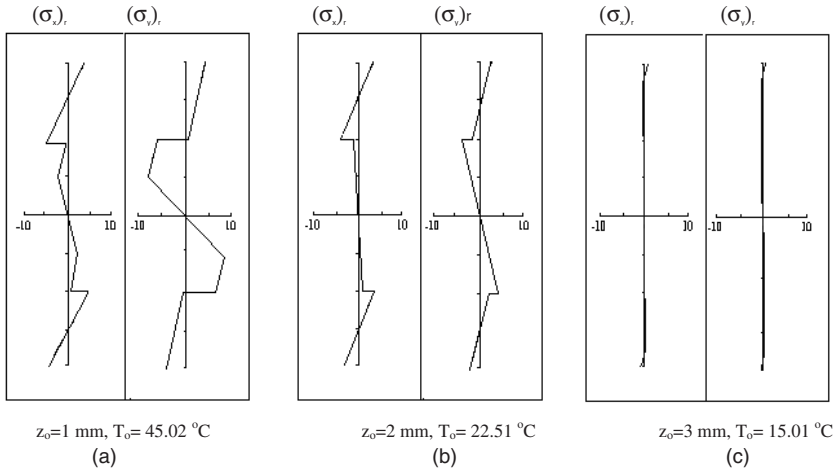

Figure 3. *The distribution of the residual stress components of σ_x and σ_y for the cross-ply orientation, $(0°/90°)_s$.*

The magnitude of the equivalent stress of the residual stress components in the principal material axes is the highest at the lower and upper surfaces and at or around the boundary of the elastic and plastic regions. If plastic region is further expanded, its magnitude increases.

The distribution of the residual stress components of σ_x and σ_y in the symmetric angle-ply, $(45°/-45°)_s$, laminated plates along the cross sections is illustrated in Figure 5. The intensity of the equivalent stress of the residual stresses in the principal material axes is the highest at the lower and upper surfaces and at or around the boundary of the elastic and plastic regions. When the plastic zone is further expanded, its magnitude increases.

The distribution of the residual stress components of σ_x and σ_y along the thickness for the symmetric angle-ply, $(60°/-60°)_s$, laminated plate is shown in Figure 6. The magnitude of the equivalent stress of the residual stresses in the principal material axes is the highest at the lower and upper surfaces and at or around the boundary of the elastic–plastic regions.

It is seen in all the figures that the equivalent stress of the residual stress components of the cross-ply $(0°/90°)_s$, laminated plates in the principal material axes is higher than those of the angle-ply laminated plates due to the most different material properties between layers in the cross-ply laminated plate. On the other hand, the mentioned angle-ply laminated plates possess the nearly same properties such as stiffnesses and thermal expansions in x and y directions.

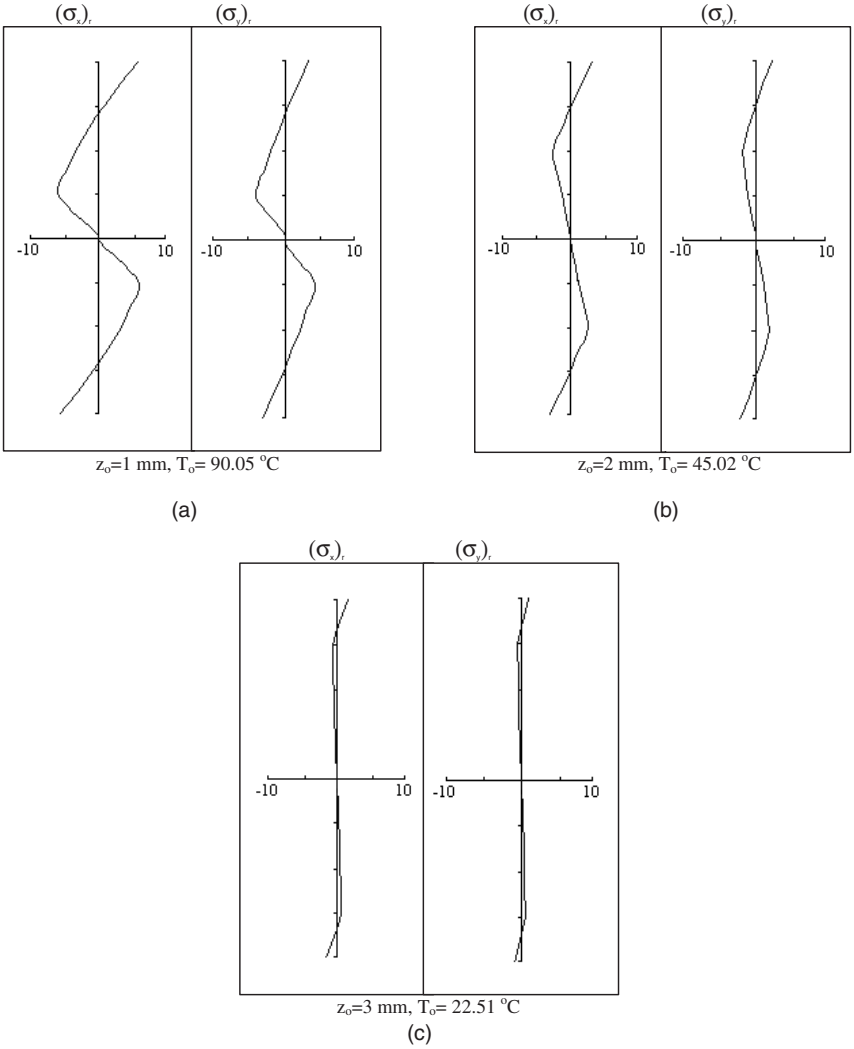

Figure 4. *The distribution of the residual stress components of σ_x and σ_y for the angle-ply orientation, $(30^\circ/-30^\circ)_s$.*

CONCLUSIONS

1. The temperature starting plastic yielding in layers for the symmetric cross-ply and angle-ply laminated plates is the same for all the stacking-sequences.

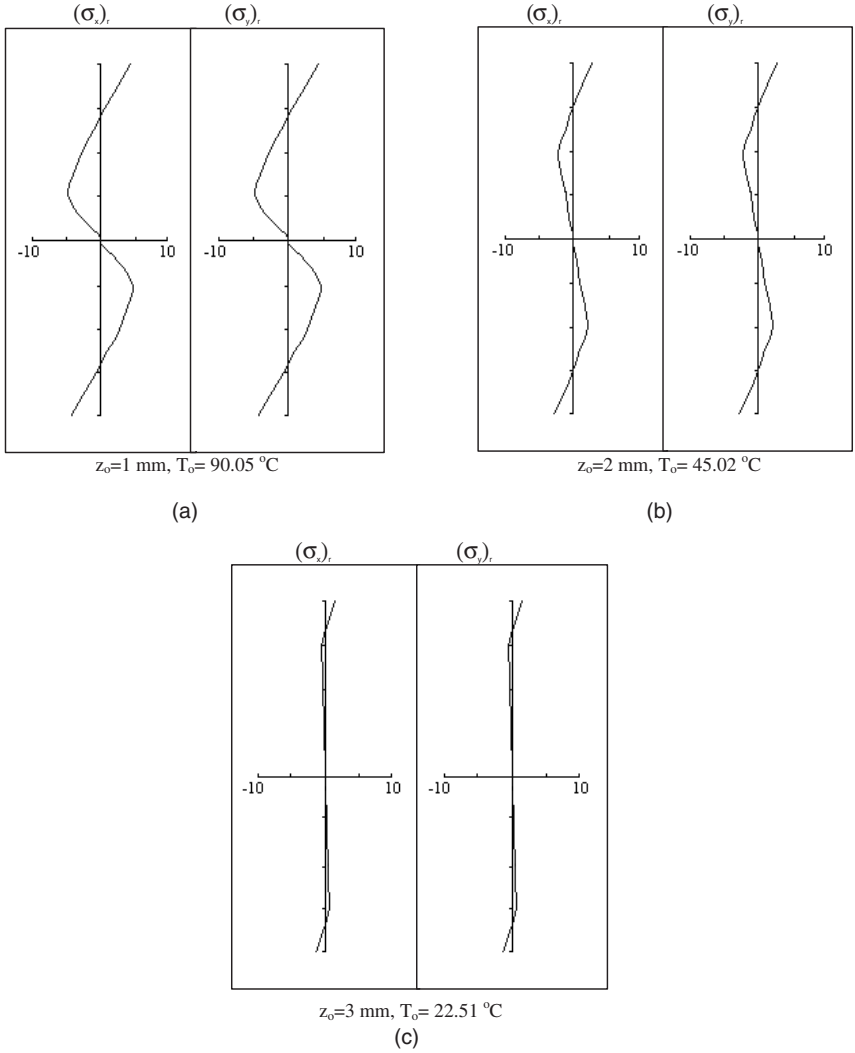

Figure 5. *The distribution of the residual stress components of σ_x and σ_y for the angle-ply orientation, $(45°/-45°)_S$.*

2. The magnitude of the equivalent stress of the residual stress components in the principal material directions in all stacking-sequences occurs the highest at the upper and lower surfaces and at or around the boundary of the elastic and plastic regions.
3. The magnitude of the equivalent plastic strain is the same in all the stacking-sequences for the same temperature.

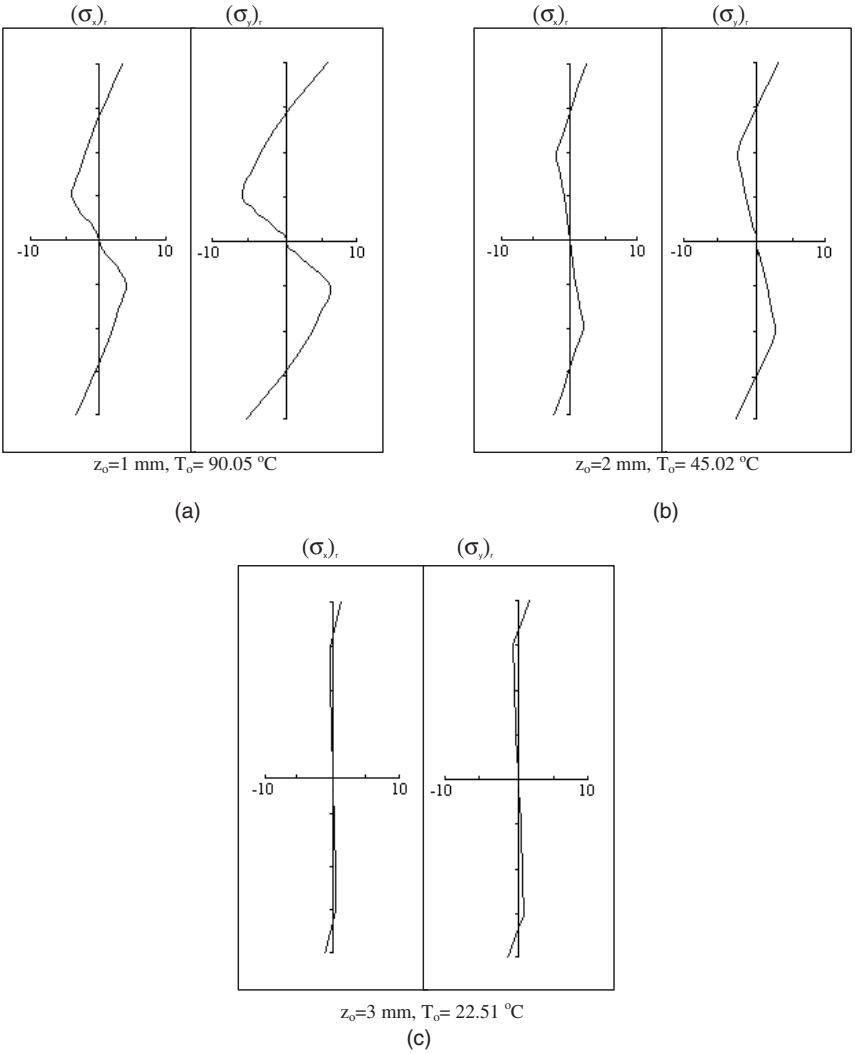

Figure 6. *The distribution of the residual stress components of σ_x and σ_y for the angle-ply orientation, $(60°/-60°)_s$.*

4. σ_x, σ_y and τ_{xy} residual stress components are found to be highest for $(30°/-30°)_s$, $(60°/-60°)_s$, $(45°/-45°)_s$, respectively.
5. The analysis shows that the stresses have a jump across the interface of the layers with different orientation angles since the stiffness of each ply is different.

6. The equivalent stress of the residual stress components in the principal material axes is the highest for the cross-ply $(0°/90°)_s$ orientation in comparison with the other mentioned orientations.

   For $(\theta°/0°)_s$ orientations,

7. The equivalent stress of the residual stress components in the principal material axes is found to be the highest for, $(75°/0°)_s$, stacking-sequences.
8. σ_x, σ_y and τ_{xy} residual stress components are, respectively, found to be highest for $(15°/0°)_s$, $(75°/0°)_s$, $(45°/0°)_s$.

REFERENCES

1. Noda, N., Hetnarski, R.B. and Tanigawa, Y. (2000). Thermal Stresses in Plates, *Thermal Stresses*, pp. 323, Lastran Corporation Rochester, NY, U.S.A.
2. Avila, A.F. and Tamma, K.K. (1988). Integrated Micro/Macro Thermo-Elastic-Viscoplastic Analysis of Laminate Metal-Matrix Composites, *Journal of Thermal Stresses*, **21**: 897–917.
3. Kim, T., Steadman, D., Hanagud, S.V. and Atluri, S.N. (1997). On the Feasibility of Using Thermal Gradients for Active Control of Interlaminar Stresses in Laminated Composites, *Journal of Composite Materials*, **31**(16): 1556–1573.
4. Barnes, J.A. (1993). Thermal Expansion Behavior of Thermoplastic Composites, Part II, *Journal of Materials Science*, **28**: 4974–4982.
5. Wang, C.H., Rose, L.R.F., Callinan, R. and Baker, A.A. (2000). Thermal Stresses in a Plate with a Circular Reinforcement, *International Journal of Solids and Structures*, **37**: 4577–4599.
6. Hu, G.K. and Weng, G.J. (1998). Influence of Thermal Residual Stresses on the Composite Macroscopic Behavior, *Mechanics of Materials*, **27**: 229–240.
7. Trende, A., Aström, B.T. and Nilsson, G. (2000). Modelling of Residual Stresses in Compression Moulded Glass-Mat Reinforced Thermoplastics, *Composites: Part A*, **31**: 1241–1254.
8. Akay, M. and Özden, S. (1994). Measurement of Residual Stresses in Injection Moulded Thermoplastics, *Polymer Testing*, **13**: 323–354.
9. Jeronimidis, G. and Parkyn, A. T. (1998). Residual Stress in Carbon Fibre Thermoplastic Matrix Laminates, *Journal of Composite Materials*, **22**(5): 401–415.
10. Unger, W.J. and Hansen, J.S. (1998). A Method to Predict the Effect of the Thermal Residual Stresses on the Free-Edge Delamination Behavior of Fibre Reinforced Composite Laminates, *Journal of Composite Materials*, **32** (5): 431–459.
11. Sayman, O. and Zor, M. (2000). An Analytical Elastic-Plastic Stress Analysis in a Woven Steel Reinforced Thermoplastic Cantilever Beam Loaded Uniformly, *Composites: Part B*, **31**: 277–284.
12. Sayman, O. and Çallıoğlu, H. (2000). An Elastic-Plastic Stress Analysis of Thermoplastic Composite Beams Loaded by Bending Moments, *Composite Structures*, **50**: 199–205.
13. Sayman, O. and Kayrici, M. (2000). An Analytical Elastic-Plastic Stress Analysis in a Thermoplastic Composite Cantilever Beam, *Composites Science and Technology*, **60**: 623–631.

14. Bektaş, N.B. and Sayman, O. (2001). Elasto-Plastic Stress Analysis in Simple Supported Thermoplastic Laminated Plates Under Thermal Loads, *Composites Science and Technology*, **61**: 1695–1701.
15. Gibson, R.F. (1994). Analysis of Laminates, *Principles of Composite Material Mechanics*, pp. 226. McGraw-Hill, Singapore.
16. Owen, D.R.J. and Hinton, E. (1980). Elasto-Plastic Problems in Two Dimensions, *Finite Elements in Plasticity*, pp. 223. Pineridge Press, Swansea.