HAL
open science

Positive and Negative Expressions Classification Using the Belief Theory

Khadoudja Ghamen, Alice Caplier

To cite this version:

Khadoudja Ghamen, Alice Caplier. Positive and Negative Expressions Classification Using the Belief Theory. International Journal of Tomography and Statistics, 2011, 17 (S11), pp.72-87. hal-00565679

HAL Id: hal-00565679

https://hal.science/hal-00565679

Submitted on 14 Feb 2011

HAL is a multi-disciplinary open access archive for the deposit and dissemination of scientific research documents, whether they are published or not. The documents may come from teaching and research institutions in France or abroad, or from public or private research centers.

L'archive ouverte pluridisciplinaire **HAL**, est destinée au dépôt et à la diffusion de documents scientifiques de niveau recherche, publiés ou non, émanant des établissements d'enseignement et de recherche français ou étrangers, des laboratoires publics ou privés.

An Efficient Method to Classify Positive and Negative Expressions

Khadoudja Ghanem[1], Alice Caplier[2]
[1]*Laboratory Lire, Mentouri University , Rue Ain El Bey, Constantine, Algeria*
[2]Gipsa Laboratory, 46 avenue Félix Viallet, F-38031 Grenoble, France

gkhadoudja@yahoo.fr alice.caplier@gipsa-lab.inpg.fr

Abstract: In this paper, we present a new method to classify expressions into positive, negative or neutral classes.. The pre processing step is based on transient features analysis. By detecting the presence or not of such transient features, into some facial regions, the considered expression is classified as negative or positive. Otherwise, the method is performed, and permanent features are then studied to classify the expression into neutral, positive or negative classes. Expression classification into negative or positive classes is done in only few nanoseconds when the pre processing step is performed , this leads to be used in realtime applications. Obtained results are given to prove the efficiency of the proposed method.

Key Words: Facial expression, classification, negative expression, positive expression, transient features, permanent features.

1 Introduction

Recognizing human facial expression by computer is an interesting and challenging problem. From the time where researches in this field started, the most common approaches were interested in classifying a given expression as one of the six universal expressions postulated by Ekman namely: Joy, Disgust, Anger, Sadness, Surprise and Fear. Much progress has been made in the last decade, and a thorough survey of the exiting work can be found in [18,19]. [……..].However in the 90s, Ekman expanded his list of basic emotions, including a range of positive and negative emotions not all of which are encoded in facial muscles [21]. The newly included emotions are Amusement, Contempt, Contentment, Embarrassment, Excitement, Guilt, Pride in achievement, Relief, Satisfaction, Sensory pleasure, Shame.
As it is difficult to distinguish between all these emotions, we propose in this paper, to classify expressed emotions in Positive, Negative or Neutral classes just to know whether the person is in a good mood, or in a bad mood.
Many different approaches reported in the psychological literature have led to the proposal of dimensions underlying emotional concepts [1]. Different researches propose two essential dimensions: *activation* (from active/aroused to passive/relaxed) and *evaluation* (from negative/bad to positive/ good), sometimes complemented by a third dimension: *power* (from powerful/dominant to weak/submissive). One concrete proposal for an emotion dimension model is the activation-evaluation space, proposed by Cowie et al. [2].

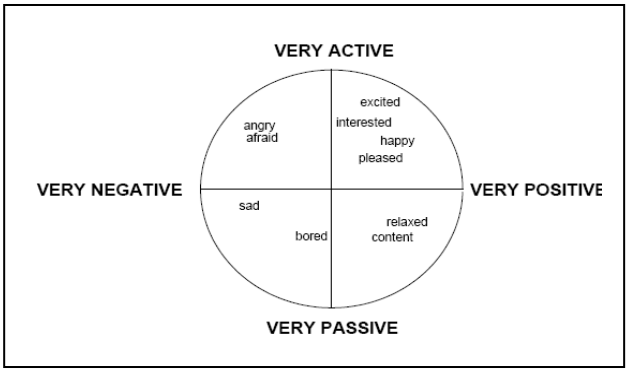

Fig. 1 The two-dimensional disk-shaped activation-evaluation space proposed by Cowie et al.

In [3] the positive-negative asymmetry hypothesis is reported, in [4] John counts features of negative and positive expressions to deduce that negative faces are particularly effective at capturing attention to the global face level. Husvar [5] studied the effects of gender and facial expressions in human interaction and Miura [6] used velocity from image sequences and optical flow to know if an expression is positive, negative or neutral.

In this paper we present a new method to classify facial expressions in three classes namely positive, negative or neutral using two types of features: transient features or wrinkles analyzed in the pre processing step and permanent features deformations in the main core of the process.

In section 2, the proposed approach is presented. Obtained results are given in section 3. We also evaluate across-dataset generalization using another database in Section 4. Finally, Section 5 concludes the paper.

2 Overview of the proposed Method:

In a first step, only transient features are considered. The detection of transient features on three facial regions : nasal root, mouth corners and chin (Fig.3), is done. If wrinkles appear in one of these regions, our expert system yields to the conclusion that the considered expression is negative. The nasolabial region is also considered. In the case of the presence of transient features on this region, we compute the angle formed by the nasolabial furrows in order to classify the expression as negative or positive.

If no transient features are detected on the corresponding regions of interest, and given that the absence of transient features on the different regions of the face does not necessarily mean that we have a neutral face, a second step is then performed. It is based on permanent features deformations (eyes, mouth, brows). Geometric distances are measured to know if the face is or not in the neutral state. If it is not the case, some of the measured distances are used to classify the face as positive or negative.

2.1 The Pre Processing Step:

As it is not the aim of our work, facial features detection is not automatically done. 18 characteristic points of permanent features are manually extracted (Fig:2). These characteristic points represent mouth corners, bottom and top of leaves, eye corners, bottom and top of eyelids , the centers of irises and finally eye brows corners. Selected points allow calculating the biometric distances as well as automatically determining regions of interests where transient features can appear (Fig:3). The selection step is then followed by a segmentation of the two facial images, to detect the presence or absence of transient features on the determined regions of the face (Fig:3).

Different kinds of transient features occur with facial expressions. Sometimes on one region and in other times on several regions. Here six regions are considered (see Fig.3): the nasal root, the two nasolabial regions, the two regions surrounding the mouth, and finally the chin. The Canny edge detector [7] associated to a thresholding stage [8] is used to detect the presence or absence of transient features. We compare the number of edge pixels in a wrinkle area in case of an expressive face with the number of edge pixels in the same area in case of a neutral face (Fig.3). If the ratio is larger than a threshold, the furrows are determined to be present. Otherwise they are absent.

Fig. 2: Selected characteristic points

-a- -b-

Fig.3 : (a): Face without transient features (b): Face with transient features in the nasolabial areas

Transient features on four regions of interest which are : The nasal root, mouth corners and on the chin are used to determine the negativity of the expression, however transient features of nasolabial regions convey another type of information allowing to classify the expression in negative or positive classes. For this raison, we study these features separately.

2.1.1 Presence or absence of transient features with different facial expressions: learning stage

In this training stage, we investigate the relation between some specific transient features and negative expressions or positive expressions.

To determine which wrinkle corresponds to which class of expressions (Negative or Positive), we train our program on 2520 images of Joy, Disgust, Surprise and Neutral expressions coming from Hammal_Caplier database [9], on 462 of Joy, Disgust, Anger, Sadness, Fear, Surprise and Neutral images coming from EEbase database [10] and on 2400 images of the same expressions coming from Dafex database [11]. Using the Canny edge detector, we detect all transient facial features appearing with each facial expression. Results are presented in Table 1. If transient features appear at least in one of the considered regions of interest (see Fig 3) for a given expression, the “1” value is associated , otherwise the ”0” value is associated. This procedure ensures a validation of the presence or absence of wrinkles with each class of facial expressions across different databases.

Transient features	JOY	SURPRISE	DISGUST	ANGER	SADNESS	FEAR
Chin	(0)	(0)	(0)	(1 OR 0)	(1 OR 0)	(1 OR 0)
Mouth corners	(0)	(0)	(0)	(0)	(1 OR 0)	(1 OR 0)
Nasolabial	(1 OR 0)	(0)	(1 OR 0)	(1 OR 0)	(1 OR 0)	(1 OR 0)
Eyes corners	(1 OR 0)	(0)	(1 OR 0)	(1 OR 0)	(0)	(0)
Nasal root	(0)	(0)	(1 OR 0)	(1 OR 0)	(1 OR 0)	(1 OR 0)
Forehead	(0)	(1 OR 0)	(0)	(1 OR 0)	(1 OR 0)	(1 OR 0)

Table 1: Presence or absence of transient features on each region for each facial expression.

On table 1, columns represent the six universal expressions and the lines represent the different regions where wrinkles can appear. For example with surprise we can get wrinkles only in the front head and with joy we can get wrinkles in nasolabial regions and/or in eye corners regions.

The study of Table 1 shows that some transient features are associated with negative expressions only. The considered wrinkles are: on the chin due to AU17, wrinkles can appear with Anger, Sadness or Fear, around mouth corners due to AU15, wrinkles can appear with Sadness or Fear and on the nasal root due to AU4, wrinkles can appear with Disgust, Anger, Sadness or Fear (Fig.6).

Presence of mouth corner wrinkles due to AU15 | Presence of wrinkles on chin due to AU17. | Presence of wrinkles on the nasal root due to AU4.

Figure 6: Transient features formed with negative expressions.

To validate these results, we generalize with another publicly available database: the JAFFE database [12]. This database contains (212 images) 10 Asiatic female subjects with seven expressions namely: Joy, Anger, Sadness, Fear, Disgust, Surprise and Neutral, each expression with different intensities. Results are presented in Table 2:

	Wrinkles on Chin	Wrinkles around mouth corners	Wrinkles in the nasal root
Joy	/	/	/
Disgust	/	/	60%
Anger	60%	/	30%
Sadness	20%	20%	40%
Fear	/	/	50%

Table 2: Wrinkles on chin, around mouth corners and in the nasal root according to each facial expression of the JAFFE database.

Using results on table 2, we can conclude that all images from the studied database with transient features on the chin, or on the mouth corners or on the nasal root correspond to the negative expressions which are Anger, Sadness, Fear and Disgust.

We computed the statistical correlation between the presence of transient features and the 6 expressions in the different used emotion databases as a similarity measure:

$$\mathrm{cor}(X, Y) \equiv \frac{\mathrm{cov}(X, Y)}{\sigma_X \sigma_Y}, \qquad (1)$$

where σ_X denotes standard deviation and $\mathrm{cov}(X, Y)$ is the covariance of these two variables.
This measure achieves the generalization performance of ~1 for the presence of transient features with negative expressions and performance of ~0 for the presence of these features with positive expressions.

Decision: As a generalization, we can say that if wrinkles appear on the chin due to AU17, around mouth corners due to AU15 or in the nasal root due to AU4, the corresponding expression is Negative. These findings are in perfect conformity with those of [20] where Sayette et al. found good to excellent reliability of Emotion-specified expressions, which are defined in terms of specific combinations of AUs, included both those thought to represent discrete emotions and more molar categories of positive and negative emotion. They found that Negative expressions are characterized by the absence of AU 12 and the presence of at least one of the following AUs: 9 (nose wrinkle); 10 (upper lip raise); 14 (unilateral dimpler); 15 (lip corner depress); 20 (lip stretch), and 1+ 4 (pulling the medial portion of the eyebrows upwards and together). These AUs are thought to appear during the expression of negative emotion (Ekman & Friesen, 1982; 1986; Ekman et al, 1980; Gosselin, Kirouac, & Dore, 1995; Rozin, Lowery, & Ebert, 1994; Soussignan & Schaal, 1996; Vrana, 1993). Ekman called them Negative Action Units.

2.1.2 Classification of positive and negative expressions based on the nasolabial furrows: Learning stage

Nasolabial furrows can appear with positive expressions like Joy as well as with Anger, Disgust and sometimes with Sadness or Fear. But these furrows are not due to the same action units. Joy nasolabial furrows appear by the activation of AU12. In case of Disgust, Anger, Sadness or Fear, nasolabial furrows appear by the activation of AU9 (Nose wrinkle) or AU10 (Upper lip raiser) (Fig.7). As a result the angle between the line approximating the nasolabial furrow and the horizontal line connecting both mouth corners, formed when AU12 is activated, is lower than the angle formed when AU9 is activated (Fig.8) [13].

Fig.7: on the left AU9 (Nose wrinkle) and AU10 (Upper lip raiser), on the right AU12 (Lip corner puller)

Fig.8: Angle formed by the nasolabial furrows with from left to right: Anger (72.6°), Disgust (71.2°) and Joy (43.4°).

To validate this idea, we measure the angle formed by the nasolabial furrows for all images with Disgust, Anger and Joy expressions of the two databases EEbase and Dafex. Calculated angles are normalized with respect to the angle 90° (the highest possible angle reached in case of the activation of AU9 or AU10). Because of the lake of Fear and Sadness images with nasolabial furrows, we did not calculate angles for these two expressions. After that, we calculate thresholds, according to each intensity (Medium or High), for each expression because the intensity criterion allows us to recognize if the expression is positive without any doubt or if it can be a positive or negative expression. The highest thresholds are computed as the average of the highest values corresponding to each expression intensity and the lowest thresholds are the average of the lowest ones. These thresholds are represented on (Fig.9) where abscissa represents thresholds values and ordinate represents arbitrary values used to separate the different expressions.

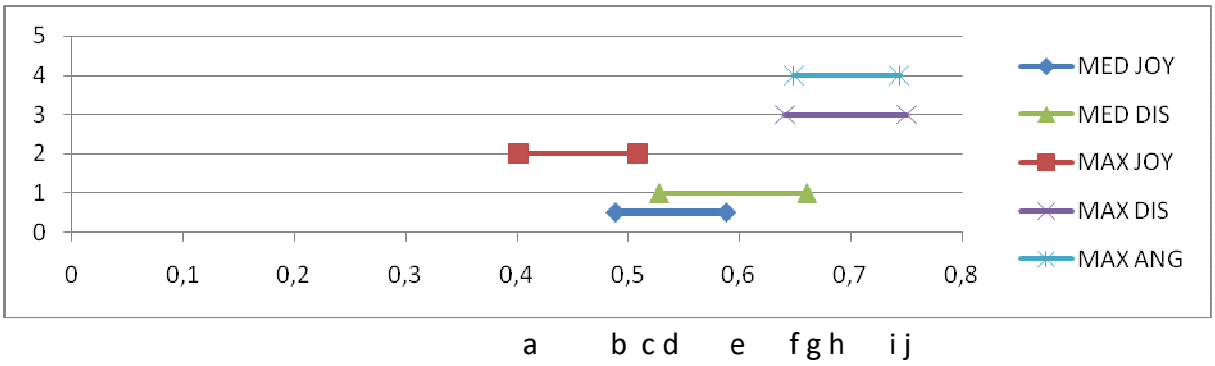

Fig. 9: Thresholds for Joy, Disgust and Anger expressions

From this figure we can see that the angle formed by the nasolabial furrows with Joy expression is lower than the angle formed with Disgust or Anger, so we deduce the rules of Table 3:

Considered intervals	Positive Expressions	Positive Exp. OR Negative Exp.	Negative Expressions
[a,d]	X		
[d,e]		X	
[e,j]			X

Table 3: Classification of positive and negative expressions based on the nasolabial furrows.

a is the minimum threshold corresponding to Joy expression with high intensity.

d is the minimum threshold corresponding to Disgust expression with medium intensity.
e is the minimum threshold corresponding to Joy expression with medium intensity.
j is the maximum threshold corresponding to Disgust expression with high intensity.

Decision: In the case of transient features in the nasolabial regions, the calculated angle formed by the nasolabial furrows is compared with thresholds computed in the training step. If the calculated angle is in the interval [a,d], the considered expression is considered as positive, if the angle is in the interval [d,e], there is a doubt between positive and negative expression, and if the angle is in the interval [e,j], the expression is considered as negative.

2.2 **The Proposed Method :** To classify an expression in positive, negative or neutral classes without being concerned by the presence or no of transient features, automated software measurements of facial actions were supplemented with Facial Action Coding System (FACS) (Ekman & Friesen, 1978) which is widely acknowledged to be the most comprehensive and objective system available.
The method is based mainly on permanent features where five distances are measured and normalized with respect to the static distance between the two irises. Computed distances are then compared with thresholds calculated in a precedent work [22] to determine if the distance increase or decrease. The aim of the use of results obtained in the previous work is that to avoid comparing the expressive face to the neutral one in case of a lake of data.

2.2.1 **Recognition of Neutral state**: To know if the face is in the neutral state, we compute the distance between eyes and brows (D2), between lids (D1), between lips (D4), between mouth corners (D3) and between eye and mouth (D5), then compare them with the corresponding distances in the neutral face (Fig.10). If these distances have not changed , the face is considered as neutral. Otherwise the expression is classified as positive or negative.

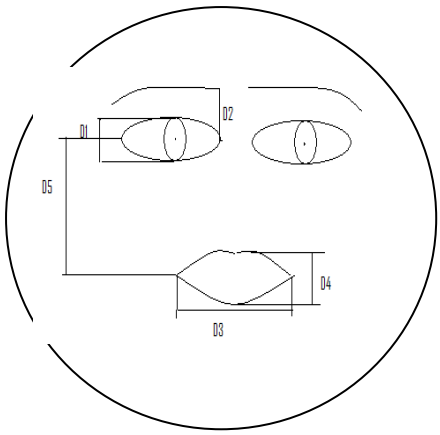

Fig.10 : Computed facial distances

2.2.2 **Classification in positive or negative classes**: By studing permanent features deformations when expressing an emotion, and by considering the lower face action units table deduced by Eckman et al, we can note that the half bottom part of the face is the most important part to know if the face expresses good mood (AU 12,13,14) or bad mood (AU 15,16,17..)

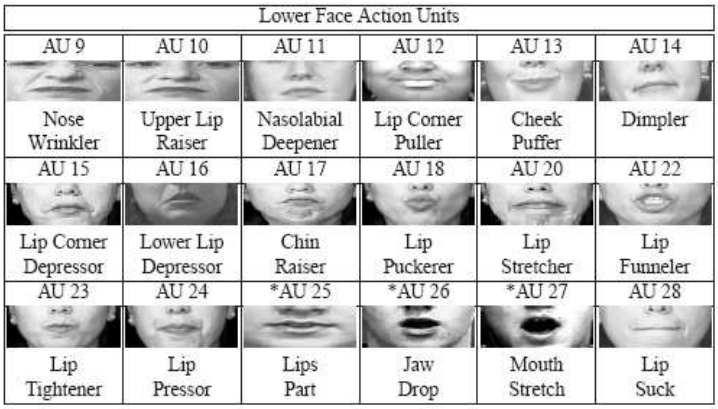

Figure 10 : Lower face action Units Table [13].

The most Aus of this part of the face correspond to negative faces. According to Ekman (Ekman & Friesen, 1982; 1986; Ekman et al, 1980; Gosselin, Kirouac, & Dore, 1995; Rozin, Lowery, & Ebert, 1994; Soussignan & Schaal, 1996; Vrana,1993), the following AUs: 9 (nose wrinkle); 10 (upper lip raise); 14 (unilateral dimpler); 15 (lip corner depress); 20 (lip stretch), and 1+ 4 (pulling the medial portion of the eyebrows upwards and together) are supposed to appear during with a negative emotion.

Since all these Aus are considered as negative Aus, we study the effect of activation of each AU to facial deformations and thus on the calculated distances on the neutral state.

With the activation of AU9 and AU10, the distance between mouth corners (D3) does not change, but the face is not no more in the neutral state (D5 : the distance between mouth and eye corners decreases) so the specified expression is negative.

With the activation of AU15 or AU16, the distance between mouth corners does not change but the distance between mouth and eye corners increases, so the specified expression is negative too.

With the activation of AU20, the distance between mouth corners increases like with joy, but the distance between mouth and eye corners increases, here the specified expression is negative.

Another type of activation effect of some other Aus like AU17, AU18, AU22, AU23, AU26 and AU27 shows that the distance between mouth corners decreases and the expressed emotion is negative.

Positive emotions are expressed by the activation of AU12, AU13 or AU14. In this case, the distance between mouth corners increases and the distance between mouth and eye corners decreases.

In the other cases, we can not be sure that expression is negative or positive so we are in a doubt between positive and negative expressions.

Sometimes upper action units express negative emotions and lower action units express positive ones, the reality is that smiles are used to mask or to control negative emotions.

Table 4 presents the rules in term of distance modifications according to positive or negative expressions.

		Negative expression (E-)	Positive expression (E+)	Pos.Exp OR Neg.Exp (E+ OR E-)
First case	Distance between mouth corners :D3	Relaxe=C OR Decreases=C-		
	Distance between mouth and eyes:D5	/		
Second case	Distance between mouth corners:D3	Increases=C+		
	Distance between mouth and eyes:D5	Increases=C+		

Third case	Distance between mouth corners:D3		Increases=C+	
	Distance between mouth and eyes:D5		Decreases=C-	
Fourth case	Distance between mouth corners:D3			Increases=C+
	Distance between mouth and eyes:D5			Relaxe=C

Table 4: Rules for each expression classes based on
the two facial distances (mouth cornersD3, mouth and eyesD5).

The Dempster-Shafer [23] theory has been used to fuse the data from multiple sensing modalities in various applications. The uncertainty of the measurements is modeled with the probability mass function, which defines a value between zero and one (basic probability assignment) to indicate the degree of support for a proposition. In the framework provided by DS theory, the frame of discernment (θ) consists of 2 θ singletons, which are based on θ mutually exclusive and exhaustive propositions. In practical applications, such proposition is expressed as a discrete value or pre-defined class number to describe certain condition or status.

In our case we define the following:

If an expression is positive we associate to it the state E+, if it is negative we associate it E-. Our aim is to characterize each type of expression with a specific combination of state distances.

If a distance increases, we associate to a state variable Vi associated to the distance Di the state “C+”, and if the distance decreases, we associate to it the state “C-“ and we associate “C” if the distance do not change.

A mass of evidence mDi =1 is associated to the distance Di if this distance changes.

In another hand, we formulate state distances by type expressions, we get :

mD3(C+)=mD3(E+UE-)

mD5(C-)=mD5(E+)

mD5(C+)=mD5(E-)

mD5(C)=mD5(E+UE-)

To make a decision about the classification of the studied expression , and as we have in most cases more than one sensor, we use the Dempster-Shafer fusion low for two characteristic distances Di and Dj , the conjunctive combination (orthogonal sum) between these two distances is defined as :

$$\boxed{\begin{aligned} & m = m_1 \oplus m_2 \\ & m(A) = \sum_{B \cap C = A} m_1(B).m_2(C) \end{aligned}} \qquad (2)$$

Where A, B and C denote the propositions and B ∩ C denotes the conjunction (intersection) between the propositions B and C.

3 **Results:** We evaluate our proposed method on different databases which are: Hammal_Caplier database [9], EEbase database [10] Dafex database [11], JAFFE database [12] and [16] positive and negative database.

In our experiments, we evaluated the preprocessing procedure on all images with transient features appearing on facial regions of interest which correspond to negative class (Deduced

from the training step). In the case of the presence of nasolabial transient features, we cropped the nasolabial region and calculated the formed angle. This angle is compared to thresholds (computed in the training step) to classify the expression into positive or negative classes.
Then we evaluated the performance of the proposed method on the remainder images without transient features, and also on images where the result presented a doupt between classes. Table 5 presents obtained classification rates correspending to the pre processing procedure and to the proposed method.

		Neutral	Neg.Exp	Pos.Exp
	Neutral	/	/	/
Pre processing	Neg.Exp.		**58,29%**	
	Pos. Exp.			**72,28%**
	Neg.OR Pos.		0,89%	10,87%
The Processing	Neutral	60,77%	5,70%	1,09%
	Neg.Exp.	39,23%	**35,12%**	
	Pos.Exp.			**10,87%**
	Neg.OR Pos			4,89%
Total Pos/Neg			**93,41%**	**83,15%**
Total		100%	100%	100%

Table 5: Classification rates obtained on the four databases.

By summing rates obtained on the pre processing step and on the processing one, we can note that classification rates of negative expressions are higher than classification rates of positive ones, it means that negative faces are particularly effective at capturing attention to the global face level as it has been proved by John in [4]. However both classification rates can be considered as good.
Sometimes, classification rates are given to the recognition of doubt between positive and negative expressions, this is due to the fact that Joy which is a positive expression is generally confused with Disgust which is a negative expression. This confusion has been exhibited in different analysis systems such as in [14], [15].
We can see that more than half of images of tested databases are classified in the pre processing step. Finally, we note that the Neutral state can be recognized only by analyzing permanent features, because the absence of transient features does not always mean that it is a neutral face.

4 Generalization to Cohn and Kanade database [24]

We also evaluated the proposed approach on the Cohn and Kanade database. The Cohn and Kanade database includes 97 university students. They ranged in age from 18 to 30 years. Sixty-five percent are female, 15 percent are African-American, and three percent are Asian or Latino. Subjects were instructed by an experimenter to perform a series of 23 facial displays that included single action units (e.g., AU 12, or lip corners pulled obliquely) and combinations of action units (e.g., AU 1+2, or inner and outer brows raised). Six of the displays are based on descriptions of prototypic basic emotions (i.e., joy, surprise, anger, fear, disgust, and sadness). Image sequences from neutral to target display were digitized into 640 by 480 or 490 pixel arrays with 8-bit precision for grayscale values.

		Neg.Exp	Pos.Exp

Pre processing	Neg.Exp.	**49,76%**	
	Pos. Exp.	0, 95%	**54,65%**
	Neg.OR Pos.		
Processing	Neg.Exp.	**45,9%**	
	Pos.Exp.	0,48%	**39,5%**
	Neg.OR Pos	2,91%	5,85%
Total Pos/Neg		**95,66%**	**94,15%**
Total		100%	100%

Obtained rates with Cohn and Kanade database are better than those with the other databases, this can be explained by the fact that the Cohn and Kanade database is larger than the others. Recognition rates of positive expressions are still lower than those of negative ones.

The rates after the preprocessing step with the other datasets are better than those with Cohn and Kanade database. This can be explained by the fact that images of the other databases were collected in a uniformly controlled environment. With Cohn and Kanade, images were collected with variations in image conditions like different lightening. When the lightening is intense, transient features can not be reliably detected even if they exist and the preprocessing procedure can not be performed. So these images are treated by the proposed method.

5 Conclusion

In this work, we presented a logical process to classify expressions into negative, positive or neutral classes. The main process consists in a preprocessing step based on transient features and on a processing step based on permanent features. The pre processing step which allows classifying more than the half of images of used databases avoid following method's steps.

Our method follows the rules that we defined, however, these rules have common criterions with FACS coding system. The dempster fusion low was used to perform the fusion of all available data. One limitation of this work is that the recognition is performed by using static images without exploiting temporal behaviors of facial expressions. Another limitation of the current work is that we do not consider some variations, such as pose variations and occlusions. In our future work, all these gaps will be addressed. We hope also to refine the classification by proposing other classes like excited positive, calm positive, dangerous negative (like Anger) and neutral negative (like Sadness).

References:

1. M. Schroder. Speech and emotion research: An Overview of Research Frameworks and a Dimensional Approach to Emotional Speech Synthesis. PhD thesis, Vol. 7 of Phonus, Research Report of the Institute of Phonetics, Saarland University, 2004.

2. R. Cowie, E. Douglas-Cowie, S. Savvidou, E. McMahon, M. Sawey, and M. Schroder. 'FEELTRACE': An Instrument for Recording Perceived Emotion in Real Time. In Proceedings of the ISCA Workshop on Speech and Emotion, pages 19–24, Northern Ireland, 2000.

3. Guido peters et al : Positive-Negative Asymmetry in the Identification of Faces in the Basis of Descriptions of Happy and Sad Facial Expressions . European review of Applied psychology , second trimester, vol 49 n°2 pp107-112.

4. John d. Eastwood :Negative Facial Expression Captures Attention and Disrupts Performance. Perception et psychophysics, 65 (3) pp 352-358, 2003.

5. Brian Husvar, : The Effects of Gender and Facial Expressions in Human Interaction. Journal of Undergraduate Psychological Research, Vol. 1,2006

6. Kazuyuki Miura : Discrimination of Facial Expressions using Velocity Estimation from Image Sequence. Proceedings of The First International Workshop on Kansei……..

7. Y.Li Tian, T.Kanade et J.F.Cohn : Recognizing Action Units for Facial Expression Analysis. IEEE Trans. Pattern analysis and machine intelligence, vol 23, N°2, p.97-114, feb.2001.

8. Otsu.N. : A Threshold Selection Method from Gray Level Histograms. IEEE Transaction on systems, Man and cybernetics, 9(1):62-66, 1979 .
9. Hammal_Caplier data base :
http://www.lis.inpg.fr/pages_perso/caplier/english/emotionnelle.html.en/emotionnelle_2.html.en.html
10. EEBase Database: http://www.cs.cmu.edu/afs/cs/project/cil/ftp/html/v-images.html
11. Dafex Database: http://tcc.itc.it/research.i3p/dafex/index.html
12. JAFFE database: http://www.kasrl.org/jaffe_download.html
13. P.Ekman, Wallace V. Friesen, Joseph C. Hager :Facial Action Coding System : A Technique for the Measurement of Facial Movement. Psychology, Physiological 1978, 2002. ISBN 0-931835-01-1 1.
14. Hammal Z., Caplier A. and Rombaut M. :A Fusion Process Based on Belief Theory Classification of Facial Basic Emotions. Proc. the 8th International Conference on Information fusion, (ISIF), Philadelphia, PA, USA, 2005.
15. K.Ghanem, A.Caplier :Estimation of Facial Expression Intensity Based on the Belief Theory. VISAPP 2008: Proc. the Third International Conference on Computer Vision Theory and Applications, Funchal, Madeira,Portugal, - Volume 1,p 452-460,2008.
16. I. Cohen and colleagues :Facial Expression Recognition from Video Sequences. Computer Vision and image understanding , volume 91, Issue 1-2, ISSN;1077 3142 pages: 160-187, 2003.
17. L. S. Chen.: Joint Processing of Audio-visual Information for the Recognition of Emotional Expressions in Human-computer Interaction. PhD thesis, University of Illinois at Urbana-Champaign, 2000……..
[18] M. Pantic, L. Rothkrantz, Automatic analysis of facial expressions: the state of art, IEEE Transactions on Pattern Analysis and Machine Intelligence 22 (12) (2000) 1424–1445.
[19] B. Fasel, J. Luettin, Automatic facial expression analysis: a survey, Pattern Recognition 36 (2003) 259–275.
[20] : Michael A. Sayette, Jeffrey F. Cohn, Joan M. Wertz, Michael A. Perrott, and Dominic A Psychometric Evaluation of the Facial Action Coding System for Assessing Spontaneous Expression J. Parrott Journal of Nonverbal Behavior, ISSN 0191-5886 (Print) 1573-3653 (Online)volume 25 number 3, pp.167-186. 2001
[21] : Paul Ekman (1999). Basic Emotions. In T. Dalgleish and M. Power (Eds.). Handbook of Cognition and Emotion. Sussex, U.K.: John Wiley & Sons, Ltd.
[22]: K.Ghanem, A.Caplier “Estimation of Facial Expression Intensity Based on the Belief Theory” VISAPP 2008: Proc. the Third International Conference on Computer Vision Theory and Applications, Funchal, Madeira,Portugal, - Volume 1, 452-460,2008.
[23] A. Dempster. “A generalization of Bayesian inference”. Journal of the royal statistical society, Vol30, ages 205-245, 1968.
[24]: Kanade,T., Cohn,J. F., & Tian, Y. “Comprehensive databse for facial expression analysis”; Proceedings of the fourth IEEE International Conference on Automatic Face and Gesture recognition(FG’00), Grenoble, France 46-53.