HAL
open science

Hybrid Systems for Solar Hydrogen: a selection of case-studies

G. Zini, P. Tartarini

To cite this version:

G. Zini, P. Tartarini. Hybrid Systems for Solar Hydrogen: a selection of case-studies. Applied Thermal Engineering, 2009, 29 (13), pp.2585. 10.1016/j.applthermaleng.2008.12.029 . hal-00539082

HAL Id: hal-00539082

https://hal.science/hal-00539082v1

Submitted on 24 Nov 2010

HAL is a multi-disciplinary open access archive for the deposit and dissemination of scientific research documents, whether they are published or not. The documents may come from teaching and research institutions in France or abroad, or from public or private research centers.

L'archive ouverte pluridisciplinaire **HAL**, est destinée au dépôt et à la diffusion de documents scientifiques de niveau recherche, publiés ou non, émanant des établissements d'enseignement et de recherche français ou étrangers, des laboratoires publics ou privés.

Accepted Manuscript

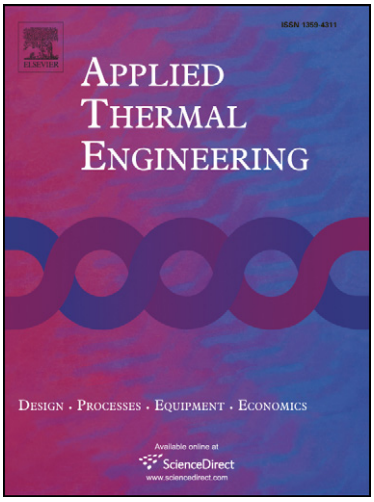

Hybrid Systems for Solar Hydrogen: a selection of case-studies

G. Zini, P. Tartarini

PII: S1359-4311(08)00508-5
DOI: 10.1016/j.applthermaleng.2008.12.029
Reference: ATE 2713

To appear in: *Applied Thermal Engineering*

Received Date: 26 May 2008
Revised Date: 16 December 2008
Accepted Date: 29 December 2008

Please cite this article as: G. Zini, P. Tartarini, Hybrid Systems for Solar Hydrogen: a selection of case-studies, *Applied Thermal Engineering* (2009), doi: 10.1016/j.applthermaleng.2008.12.029

This is a PDF file of an unedited manuscript that has been accepted for publication. As a service to our customers we are providing this early version of the manuscript. The manuscript will undergo copyediting, typesetting, and review of the resulting proof before it is published in its final form. Please note that during the production process errors may be discovered which could affect the content, and all legal disclaimers that apply to the journal pertain.

ACCEPTED MANUSCRIPT

Hybrid Systems for Solar Hydrogen: a selection of case-studies

G. Zini and P. Tartarini

DIMeC, University of Modena and Reggio Emilia, Via Vignolese 905, I-41100 Modena

Corresponding author: Prof. Paolo Tartarini, DIMeC, University of Modena and Reggio Emilia - Via Vignolese 905, I-41100 Modena, Italy - e-mail: paolo.tartarini@unimo.it, Tel: +39-(0)59-2056146, Fax: +39-(0)59-2056126/6129

Abstract

Twelve case-studies on systems that generate, store and use hydrogen from photovoltaic energy are hereby presented and discussed. Hydrogen generated from direct sunlight is often called *solar hydrogen*, and the whole process is characterized by having very low CO_2 and pollutants emissions. Such systems, comprising of several sub-systems of different technologies, are called *hybrid systems*. All case-studies are briefly analyzed and the most prominent conclusions reported. Results show that production of solar hydrogen and its subsequent use in fuel cells is technically viable but costs still need to be reduced for widespread adoption. A comparison is given and need for further work highlighted; in particular, researchers should investigate carbon structures as a potential alternative to pressurization or metal hydrides; a complete analysis of the intangible costs and benefits involved should be performed, together with Discounted Cash Flow and Life Cycle Assessment analysis to understand the true nature of such investments and their sustainability in the near future. Performing such a rigorous and complete economical analysis would, for instance, enable governments to design better incentive schemes and propel such technology in real life usage.

Keywords: Solar Hydrogen; Hydrogen Economy; Fuel Cells; Photovoltaics.

ACCEPTED MANUSCRIPT

1. Introduction

In order to cope with the growing concerns for the future of energy supplies and the environmental impact of fossil fuel combustion [1], energy production in the near future will likely come from systems employing, mostly or exclusively, renewable energy sources (RES). A change from the actual economy based on fossil fuels to one based on RES would represent a radical change capable of altering not only the social and political landscape, but also of modifying everyday life as we know it [2-9].

The most prominent disadvantage of RES is their variability (e.g. lack of wind in aero-generators, lack of solar radiation for photovoltaics). Energy availability without time constraints would hence requests energy storage. Small power needs cater for the use of batteries or accumulators that show the drawback of low capacity and discharge also when not connected to the load, are not environment-friendly, have high maintenance costs, short life span, and a limited numbers of charge-discharge cycles [10]. For greater power needs, internal combustion engines are used to provide higher power and longer times, but their use, which emits CO_2, often consumes fuel also if RES are available, limiting potential fuel savings to only 20% when used in combination with RES systems [11]. Energy storage by means of hydrogen (H_2) could represent the solution capable of guaranteeing long storage times, high capacities, and smoothing of intermittent and discontinuous RES. Hydrogen is indeed a very good energy vector since it can substitute for fossil fuels in several applications or be burnt in fuel cells to produce electricity and heat with very low environmental impact [12]. For instance, hydrogen could be obtained by conversion of wind energy or direct sunlight; in this case, generated H_2 is often referred to as s*olar hydrogen* [13].

ACCEPTED MANUSCRIPT

We would hence lay the foundation of an hydrogen economy defined as *"the industrial system in which one of the universal energy carriers is hydrogen (the other is electricity) and hydrogen is oxidized to water that may be reused by applying an external energy source for dissociation of water into its component elements hydrogen and oxygen"* [14].

An hydrogen economy that would also be environmentally sustainable should be qualified by low production costs, low emissions of climate-changing gases and pollutants, high conversion efficiencies, safe operations and maintenance [15, 16]. The advantages would be numerous: production of a highly usable energy vector; low environmental impact; high system reliability, scalability, long life cycles.

An hydrogen-based energy system is only one of the possible options that can actually prove to be successful in the future. For instance, Lund and colleagues [17, 18, 19] point out that, for a country like Denmark, an energy system could be based mostly on biomass with farming areas capable of guaranteeing energy as well as food production; hydrogen as energy vector would play a lesser role if a combination of wind, wave and solar energy were employed alongside biomass. New relocation strategies between energy production and demand could be devised, hence creating the possibility for different scenarios to emerge [20]; for instance, local conversion of electricity to heat by means of CHP, heat pumps and electrical boilers could lead to the design of more integrated and flexible energy nets with high conversion efficiencies. Furthermore, other elements like silicon or aluminum could also be employed as energy carriers [21, 22].

In this paper we define *hybrid systems* the combination of systems of different technologies for the production, management, storage, use of different energy vectors

ACCEPTED MANUSCRIPT

(electricity and hydrogen). An hybrid system for solar hydrogen employs photovoltaic technology (PV) to convert direct sunlight energy in electrical energy, used as input to an electrolyzer (EL) which splits water into hydrogen and oxygen by water electrolysis; hydrogen is then stored until it is used as fuel in a combustion reaction with oxygen that takes place in fuel cells (FC). Energy can then be provided to *stationary* applications (e.g. industrial or residential plants) or *non-stationary* applications (e.g. Transportation). Such systems can be, as usual, *grid-connected* or *stand-alone*.

In the following pages we will discuss a selection of case-studies relevant to hybrid systems for solar hydrogen; we will consider computer simulations as well as real systems. General considerations will be drawn, main take-aways outlined, some criticalities and possible research areas highlighted.

2. Computer Simulations

To study and optimize the technical and economical performance of hybrid systems, a number of mathematical models have been developed due to their convenience in designing and simulating real systems. They have also proved useful to profile and orient decision-making processes prior to actual system construction.

The model described in [23, 24] develops a set of equations where PV can be either fixed or tracking. It consists of different sub-models, each one necessary to completely characterize the single sub-systems; these are meant to define the *(I, V)* curves of the PV generator, the *(I, V)* of the EL, the solar radiation energy from hourly data, V_{OC} and I_{SC} of PV modules so to optimize system management and estimate costs.

ACCEPTED MANUSCRIPT

Fig. 1

The PV can be fixed or tracking, a Maximum Power Point Tracker (MPPT) delivers the highest possible power to the downstream DC/DC converter which then drives directly the EL (Fig. 1).

The PV (I,V) is defined by the following [25]:

$$V = -IR_s + \Lambda^{-1}\ln\left(\frac{I_{ph} - \beta I - (V / R_{sh})}{I_0} + 1\right) \tag{1}$$

$$I = I_{ph} - I_0\left(\exp\left(\Lambda\left(V + IR_s\right)\right) - 1\right) - \frac{V + IR_s}{R_{sh}} \tag{2}$$

where R_s series resistance, R_{sh} shunt resistance, Λ completion factor, $\beta = 1 + R_s/R_{sh}$, I_0 inverse saturation current, I_{ph} cell current. This (I, V) relationship can be defined by means of n I-V points that can be obtained either experimentally or through some selected values like V_{OC}, I_{SC}, I and V at maximum power point, together with the slopes of the curve where V or I each are null. In any case, the solutions of Eqs. (1) and (2) can be obtained iteratively. If V_{OC}, I_{SC}, $(dI/dV)_{I=0}$, $(dI/dV)_{V=0}$, Max(I, V) are used, from the previous equations 5 non-linear equations are derived [26]; they can be solved with Newton-Raphson iterative algorithms, hence obtaining the (I, V) curve. I_{ph} and I_0 can be computed from the given I_{SC} and V_{OC} using Lagrange interpolation at different solar irradiation values:

$$I_{ph} = \beta I_{sc}\ ,\ I_0 = \frac{\beta I_{sc} - (V_{OC} / R_{sh})}{\exp(\Lambda V_{OC})} \tag{3}$$

Solar irradiation can be determined by usual techniques [25, 27] that consider direct, diffused and reflected irradiation contributions:

ACCEPTED MANUSCRIPT

$$H_T = H_b R_b + H_d \frac{1+\cos(s)}{2} + \rho(H_b + H_d)\frac{1-\cos(s)}{2} \quad (4)$$

where H_T is the total irradiation, H_b is the direct irradiation, R_b is the correction factor, H_d is the diffused irradiation, s is the PV tilt angle, ρ is the albedo. Optimal operating point for each value of solar irradiation is computed with an MPPT algorithm.

Hydrogen production is proportional to current I as in v=1.22*10^{-7}I, where v is expressed in m^3/s [28], while production costs C, that take into consideration purchasing, commissioning, operations, on/off hours, maintenance, life-cycle, present value and capital rates are given by [29]:

$$C = (F_c + F_{om})C_{su} / E_a \ , \ C_{su} = (1+i_{dc})(1+r_{dc})^n C_t \quad (5)$$

$$F_{om} = F_{om_i} \frac{\sum (1+r_i)^y (1+j_i)^{-y}}{\sum (1+j_i)^{-y}} \quad (6)$$

where C_{su} is the start-up investment, F_c is the cost of capital, F_{om} is the annual cost factor for O&M, F_{omi} is the initial O&M cost factor (assumed as the 2% of $C_{su)}$, E_a is the annual hydrogen production in GJ, i_{dc} the interest rate during construction, r_{dc} is the inflation rate during construction, C_t are the total estimated system costs, j_i is the annual interest rate, r_i is the annual inflation rate.

The simulation is run for fixed and tracking systems. In Fig. 2 (left) efficiencies as a function of yearly solar irradiation are shown. System efficiency η is defined as the yearly Hydrogen HHV over total yearly irradiation on PV modules. Cost estimates (Fig. 2, right) have a strong correlation with yearly solar irradiation (r^2=0.98). A minimum cost of 44.5 USD/GJ (using forecasts for 2010) is reached when yearly H_T is higher than 8 GJ/m^2/year.

Fig. 2

ACCEPTED MANUSCRIPT

Fig. 3 plots hydrogen energy and production costs as a function of H_T and $(P_{PV}+P_{EL})/H_T$, where P_{PV} and P_{EL} are the prices of the PV and EL system; computed hydrogen costs range from 27 to 285 USD/GJ.

Fig. 3

Along the same irradiation interval, the hybrid system efficiency η_T and EL productivity *v* range respectively from around 8.5% to 9.5%, and 0.2 to 0.28 $m^3/h/kW_p$.

Bilgen [30] gives a quick but significant estimate for a non-stationary application: solar hydrogen production to supply an advanced hydrogen car for a yearly coverage of 12000 km. If the car consumption is 85.7 km/kg_{H2} (as is the case for the Honda FCX) we would need around 140 kg H_2 . With an EL with 5 to 10 kW power and 80% efficiency, the PV system should hence be dimensioned in order to be able to supply 6900 kWh per year. In the near future, with lower PV costs, increased PV efficiencies and lower car consumption rates, a domestic installation will be able to supply not only electrical energy for daily in-house use, but also for all our mobility needs.

To understand which solution between a direct connection or an MPPT connection of a PV field to an EL has the higher efficiency, Ahmad [31] employs specific data-loggers to measure solar radiation, hydrogen flow rate, ambient and module temperatures, voltage and current. EL and overall system efficiencies are:

$$\eta_{electrolyzer} = \frac{QE}{V_L I_L}, \quad \eta_{overall} = \frac{QE}{HA_m} \tag{7}$$

where Q is the H_2 flow rate (in ml/s), E is H_2 heating value (J/ml), V_L the load voltage (V), I_L the load current (A), H the solar radiation intensity (W/m^2) and A_m is the PV area

ACCEPTED MANUSCRIPT

surface (m^2). The overall efficiency of MPPT is 50% higher than the direct coupling system.

3. Real Systems

The FIRST Project. A stand-alone system to convert direct solar energy in hydrogen has been studied at CIEMAT (Madrid, Spain) within the project *FIRST* (*Fuel cell Innovative Remote System for Telecoms*) [32, 33]. The system (Fig. 4) has been designed to supply a power of 200 W_e without interruption from a 1.4 kW_p PV field (thin-film technology, 9.9% conversion efficiency). The electrical energy produced is stored in batteries (20 kWh capacity) to smooth RES fluctuations. A PEM EL produces hydrogen (at 30 bar with temperature ranges within 0° and 40°C) which is stored in a set of 7 metal-hydride tanks, 10 Nm^3 each.

Hydrogen is converted back to energy in a 275 W_e PEM FC. A software manages the operations of the system and a data-logger acquires data like PV conversion efficiency, battery charge, electrical current and voltages of the various sub-systems, operating temperatures and storage pressures. In Table 1, the average values of some of the most interesting data are listed as recorded by the data-logger during a summer monitoring.

Fig. 4

Table 1

ACCEPTED MANUSCRIPT

The energy conversion from PV is 6%, less than initial 9.9% due to all conversion losses downstream the PV field. This energy is anyway enough to keep batteries at a high charge rate (87% average), and is also capable of producing H_2 while driving the load with 2.5 A per day. The 0.33 Nm^3 daily production provides at the end of spring-summer season a month-long autonomy, enough to guarantee total energy independence to the connected load for the rest of the year.

Fig. 5 shows test results on a time-frame of two typical summer days, with and without H_2 production. If the system is working in path 1 mode, the energy management system must avoid battery surcharge, hence all available PV power is lost from 12h00 onwards since it cannot be stored. RES conversion efficiency is therefore fairly low, being only around 4.1% of all incident solar energy. In mode 2 configuration, a great part of the converted electrical energy from 12h00 is used for H_2 production, hence avoiding RES energy loss and converting up to 6.5% of incident solar energy. During the summer, such energy can drive the load (2.7 kWh/day at 2.5 A) and the EL with no need to integrate power by switching on the FC. The EL is working mostly during daily hours when solar irradiation is high. In the pressure tanks, storage pressure increases linearly from minimum to maximum in about 5 hours, then it decreases very slowly when the energy management system reduces to the minimum the converted energy due to slow adsorption kinetics of the metal hydride tanks.

Fig. 5

FC activation starts when battery state of charge reaches down to 35%, supplying power until the state of charge rises over 70%. Conversion efficiency is computed as:

ACCEPTED MANUSCRIPT

$$\eta_T = \frac{E_C}{E_S} = \frac{\eta_{PV} E_{PV} + \eta_H E_H}{E_{PV} + E_H + E_0} \tag{8}$$

where E_C is the energy supplied to the load, E_S is the total energy from incident solar radiation, η_{PV} is path 1 conversion efficiency, η_H is path 2 conversion efficiency, E_{PV} is path 1 input energy, E_H is path 2 input energy and finally E_0 is the input energy which is not converted.

Fig. 6

The system management software must minimize E_0 by increasing the energy that enters path 1 and 2. η_T has reached, in test conditions, values around 6-7%, while η_H has been computed as 2.3%. To complete the picture, in Fig. 6 a one year H_2 production and FC energy deliverance is shown.

The Cooper Union Project. The hybrid system developed at the *Cooper Union* (U.S.A.), comprised originally of a wind generator that was soon substituted with a 150 W_p PV field, considered as being safer and more reliable. No FCs have been introduced to make use of the stored H_2. RE-generated current directly powers the ELs which are capable of a maximum productivity of 0.014 Nm^3/h. While oxygen is vented, H_2 is treated and stored, without compression, in two metal hydride tanks [34].

To help with sub-systems dimensioning, the authors have developed a simulation software which receives as input the PV field data, hourly temperatures, solar irradiation, storage tanks data, load power curves; as output, the software yields voltage, current, power from PV; quantity and flow of H_2 produced; pressures, quantity of stored H_2 in each tank; water temperature for H_2 charge/discharge; voltage, current, and H_2 flow.

ACCEPTED MANUSCRIPT

Test results show that, given the fluctuations and variability of solar irradiation, H_2 production is correlated with solar irradiation (through its correlation with PV converted electrical energy), but not correlated with EL and storage pressures.

The ENEA Project. In Italy, the *Ente Nazionale per le Energie Alternative* has started a research project to understand the technical aspects of hydrogen generation from PV systems [35]; between project goals are the evaluation of the reliability and efficiency over the long period and the issues related to safe operations and maintenance.

The set-up they devised and installed comprised of a PV field of 5.6 kW_p (180 modules, mono-crystalline), a bipolar alkaline EL of 5 kW (water-cooled, 80°C, high-pressure, 20 bar output), and a mixed metal hydride and pressure tank storage sub-system (storage capacity: 18 Nm^3). The control system is based on a PLC (Programmable Logic Controller) and controls electrolyte temperatures, current ranges, water conductivity, pressures, gas leakages and impurities, and stops the system depending on type of alarm. After three years of operation though, the EL has shown a marked decrease in performance.

As a way to increase overall system efficiencies, the storage system releases H_2 at 20°C between 2 and 4 bar, hence avoiding the need to supply heat to the downstream FC. The FC is a 3 kW PEM operating at 72°C. H_2 and air are supplied at constant pressure and are consumed evenly and proportionally to the varying load conditions. Water is either retrieved to cool down the system and moisten input gases or vented in a controlled way. Part of the heat produced during operations is recovered in a water-air heat exchanger. These satellite sub-systems and the control system together absorb around one tenth of the power produced by the overall system. System output is 2.75 kW at 125 A, 22 V. At maximum operating conditions, cell efficiency is 53,6%.

ACCEPTED MANUSCRIPT

The plant has been designed by taking into proper consideration all the safety issues related to management of inflammable gases: walls and doors are fire-grade, electrical wirings and components are specific for environments with high risk of explosion, and sensors have been installed to immediately signal emergency conditions.

The Zollbruck Full Domestic System. A domestic system has been set up in Zollbruck, Switzerland, by the owner who has operated it manually since 1991 [36].

The PV field is a 5 kW_p, covering a roof area of 65 m^2, with an average efficiency around 8.4%. Other assemblies, located in two 10 m^2 rooms, are a DC-DC converter (95% efficiency), an alkaline EL of 5 kW (62% average efficiency), a H_2 purifying unit, a compressor, two metal hydride tanks of which one of 15 Nm^3 for household appliances (a oven and a washing machine), and one of 16 Nm^3 used to supply power to a mini-van running on H_2. Thermal energy is lost into atmosphere. Connection to the grid is maintained to supply systems which are not directly connected to the experimental set-up. Prior to storage in the metal hydride tanks, a compressor is used to store H_2 in a pressurized tank. The authors note that storage capacity is more than 10 times less than what would be needed in order to gain complete energy independence from the grid, which would be gained if storage capacity be increased to at least 200 Nm^3.

Fig. 7

System performance has been measured over three summer days. In Fig. 7, solar radiation, H_2 production, current and temperatures are shown. After a morning with clear sky conditions, the first clouds in the afternoon caused strong current variations in the EL. Around 5 pm, the EL switched off for the first time, then it switched back on briefly until

ACCEPTED MANUSCRIPT

final shutdown at 5.30 pm. More than half of the H_2 production was not stored due to the absence of a temperature control system that would drive adsorption kinetics inside the metal hydride tanks allowing to employ all available storage volume. Table 2 summarizes the most relevant data from the three-day period.

Table 2

An energetic balancing of the system shows that the 293 GJ received in one year by the PV field would become: 24.5 GJ electrical energy before DC-DC conversion or 23.4 GJ after DC-DC conversion (efficiency 8.4%); of these, only 18.6 GJ are used by the EL while the remaining 4.9 GJ are sent to the grid or used to charge auxiliary batteries (3 GJ per year); 11.5 GJ are stored as H_2 (1148 Nm^3) with a 62% EL efficiency; of these, only 10.6 GJ remain after the H_2 treatment and purification stage. Net yearly H_2 production then amounts to 16 Nm^3/m^2 which are equivalent to 300 l fuel. Yearly system efficiency consolidates around 8.4% (PV conversion efficiency) * 51% equal to 4.3% (Fig. 8).

Fig. 8

To improve overall system efficiency, an automatic control system should be added in order to manage system operations avoiding inconsistencies of manual operations; a treatment stage that avoided H_2 losses would increase by 8% its quantity available for storage; lastly, increasing capacity to 200 Nm^3 would make the system completely independent from the grid. Also, recovery of wasted thermal energy would increase system performance.

ACCEPTED MANUSCRIPT

The Schatz Solar Hydrogen Project. Started in 1989 at Humboldt State University Telonicher Marine Laboratory (California, USA), the project has the goal of verifying the feasibility of solar hydrogen in a real operating context; the system was indeed used for aquarium aeration [37].

Power is sourced from a 9.2 kW_p PV field. The EL is a medium pressure bipolar alkaline PEM. Hydrogen exits at a pressure of 790 kPa (7.9 bar) and is stored in 3 tanks, total capacity 5.7 Nm^3. The FC can generate with the H_2 stored around 133 kWh (at H_2 HHV) and supply a load of 0.6 kW for 110 hours (with 50% efficiency). Electrical energy obtained from the PV can directly drive the load, while every power excess is used to produce H_2. If solar radiation is not enough, the FC is switched on. All such operations are managed by an automatic control system.

Efficiencies are computed with the formulas:

$$\textit{Faraday efficiency} = \textit{Actual vs. Theoretical } H_2 \textit{ production} \quad (9)$$

$$\textit{EL efficiency} = \textit{Rate of } H_2 \textit{ production / Input power} \quad (10)$$

$$\textit{PV efficiency} = \textit{PV power used by the system / Solar radiation} \quad (11)$$

$$H_2 \textit{ production efficiency} = \textit{PV efficiency} * \textit{EL efficiency} \quad (12)$$

Average values are 76.7% (EL) and 6.2% (H_2 production). Concerning EL, cumulated average daily efficiencies are satisfactory for an 11-month period, hence showing good results with nearly all kinds of solar radiation profiles; for instance, EL efficiency is higher than 75% for more than 70% of daily averages, with current densities ranging from 15 to 400 mA/cm^2 and electrolyte temperatures from 10 to 70°C.

Also PV daily average efficiencies and H_2 production efficiencies are good (Fig. 9): PV efficiency is over 7.8% more than 70% of daily averages, while H_2 production efficiency overcomes 6% the 70% of the daily averages.

ACCEPTED MANUSCRIPT

Fig. 9

Results of a single day of operations are shown in Fig. 10, where we can appreciate how the Faraday Efficiency had been very good apart from starting and ending hours, when EL cycled on and off due to insufficient input current.

Fig. 10

In Fig. 11 system operations have been plotted during a day with variable meteo conditions; it is easy to see how the control sub-system supplies the load with a very good quality of service (QoS).

Fig. 11

Since this hybrid system is working in a real setting, all precautions have been taken in order to assure risk-free operations. Designers have attempted to take all possible risks into account by adopting a tree analysis; all hardware and software have been extensively tested and debugged; lab people have been trained to quickly react to risky conditions; a fail-safe strategy has been adopted and a software switches automatically the load to grid through different steps depending on fault conditions. To provide safety and reliability, a detailed maintenance plan has been developed and enforced so that inspections and interventions are scheduled weekly, monthly, yearly depending on maintenance manuals of all sub-systems. After several months, the solar hydrogen system has proved to be very reliable and safe.

ACCEPTED MANUSCRIPT

ACCEPTED MANUSCRIPT

GlashusEtt. The "Glass house one" is a building in Stockholm, Sweden, used as an exposition and information center for sustainable life-styles and renewable energies financed and supported by some local financial and industrial institutions; the solar hydrogen system has been set-up together with a traditional heating and electrical systems, thus granting researchers the possibility to understand differences by direct comparison [38].

The system (Fig. 12), which is the first installed in a residential setting in Sweden, integrates PV, Biogas, EL and FC and is open to the public.

Fig. 12

The 3 kW_p PV field is a multi-crystalline covering a roof area of 25 m^2. The FC has the possibility to use H_2 from a reformer or directly from the H_2 tank storage. A water tank is used as a heat accumulator to recover the heat from the FC; actually, its small size (500 l) is too small to act as a heat sink, hence most of the heat from FC is dispersed in the room. A better dimensioned heat recovery system would improve overall system efficiency.

EL is connected to both the PV field and the electrical grid, so that it can work both in DC and AC mode. H_2 production is confined under the roof where also the 50 l storage tanks are directly connected, no compressor needed, to the EL. The system is monitored by a control unit and a data-logger. The data recorded are H_2 mass flow, electricity, heat produced or used by the different sub-systems, meteorological data from sensor installed over the building roof. First measures have been used to compute electrical and thermal efficiencies. FC efficiency has resulted in a 13% electrical and 56% thermal,

ACCEPTED MANUSCRIPT

while EL efficiency is around 43%. Approximately the 5% of input energy is assumed to be lost in the exhaust, while heat and power losses amount to 25.6%.

To evaluate different automatic control strategies, the authors have developed a computer simulation based on load profiles, investment costs, electrical prices and solar radiation in order to evaluate efficiencies and economical results like total costs and costs per kWh. Thermal and electrical load profiles have been obtained by applying, over real measures, hourly fluctuations as in the work of Aronsson [39]. Simulation results show that the system is not capable of guaranteeing building energetical independence: H_2 storage is emptied in only 4 hours, while filling occurs in 34 hours. The biogas heater cycles frequently from on to off, but a lot of heat is lost in the environment.

4. Highly Integrated Systems

The SWB industrial plant. An industrial-wide plant, representative of all the work that is undergoing to understand issues in high power and highly integrated systems, has been built in Neunburg vorm Wald (Germany) by Solar Wasserstoff Bayern GmbH (SWB), joint venture of Bayernwerk AG, Siemens AG, BMW AG and Linde AG [40]. The goal is the design, integration and operation of several different technologies to achieve high QoS from RES in a dedicated industrial plant.

Several different PV technologies are in place (mono, multi and amorphous), in different sizes ranging from 6 to 135 kW_p. Other sub-systems are: DC/DC and DC/AC

ACCEPTED MANUSCRIPT

converters; DC and AC bus-bars; two low pressure ELs of 111 kW_e and 100 kW_e capable of H_2 productivity of 47 m^3/h; compressors and gas treatment stages, heaters (running on mixed gas and H_2); refrigerating units (running on H_2) of 16.6 kW_{th}; three FCs, one alkaline of 6.5 kW_e and 42.2 kW_{th} (fuel: H_2), a second one (phosphoric acid) of 79.3 kW_e and 13.3kW_{th}, the third a 10 kW_e air PEM used to power an hydrogen-operated forklift; finally, a filling station for cars.

In every kind of plant, and even more for big-sized plants like this one, the safety specifications and correct risk management are extremely important. Prevention hence is crucial to avoid every source of danger that can cause the creation of explosive mixtures of H_2 with air or oxygen. First, confine and control gases within the industrial process following state-of-the-art design techniques like appropriate construction and plant layout, venting, alarm and leakage control systems. Second, eliminate every potential triggering of detonation by: avoiding free flames all around the industrial process, use of anti-sparking components in electrica1 or mechanical systems, allowing for safety distances between different building areas, earthing of all machines, motors, devices, power systems and all electrical wirings. Third, minimize damages caused by any incident that might occur; this would mean, to name just a few, installing fire-resistant walls and doors and automatic fire extinguishing systems. Finally, when managing plants with many people involved, adopt collective measures like emergency rescue and fire-fighting training, evacuation plans, perform a rigorous maintenance and periodical checks of all emergency and fire-fighting devices.

The work done at Neunburg has shown how, for plant-wide hybrid systems like this, the know-how gained in the usual fields of process engineering, safety design, plant operations management techniques is still valid.

ACCEPTED MANUSCRIPT

The Trois Rivière Plant. The stand-alone system designed by the *University of Québec Trois-Rivière* employs both wind and direct sunlight to provide electrical power to telecommunications stations [41]. Excess energy is used to produce and store H_2 when RES do not provide enough power to the load. The hybrid system comprises of a 10 kW wind generator installed on a 30 meter high tower and a 1 kW_p PV field; a set of batteries acting as a power buffer to a DC bus-bar; a 5 kW EL producing 1 Nm^3/h of purified H_2 at 7 bar; a compressor to achieve a 10 bar H_2 pressure; a 3.8 m^3 (liquid) tank that can store up to 125 kWh H_2 energy; a 5 kW PEM FC; a DC/AC inverter to supply 115 V at 60 Hz to the load.

At an average speed of 6 m/s, the aero-generator provides an average power of 2 kW and a H_2 production rate of 0.4 Nm^3/h. Production starts at wind speeds of 3.4 m/s and reaches the maximum of 10 kW with wind speeds at 13 m/s. The output voltage from wind and PV is than conditioned and converted to 48 V on a DC bus-bar, whose voltage is stabilized by means of batteries. The power generation system (aero-generator, PV and the FC), the EL, compressor and the load are connected to the bus-bar.

In Fig. 13 the power output and H_2 production over a five-day test period are plotted.

Fig. 13

EL efficiency is 65% at 23°C and 71% at 55°C. FC efficiency is higher than 45% at 4 kW, with a total efficiency over 42%. Efficiency is computed as the ratio of cell output power and its theoretical power P_{th} as a function of load current in case oxygen and air are used as oxidants:

$$P_{th} = (\mathrm{HHV} \cdot \mathrm{N_{cells}} \cdot I) / (2e^- \cdot \mathrm{F}) \quad (13)$$

ACCEPTED MANUSCRIPT

where HHV = 287 kJ mol^{-1}, N_{cells} = 35 (stack number of cells), *I* load current, F = 9.6487 10^{-7}, Faraday's constant. The system is capable of very quick responses to changing load conditions.

The HaRI Project. The system developed under the *Hydrogen and Renewable Integration* project in Loughborough, UK, has been built to provide electrical and thermal power to offices and residential units [42]. This system (Fig. 14) employs several different power sources that make it an interesting example of complex integration between different technologies: a wind generator with two turbines of 25 kW; two PV fields (mono and multi-crystalline) of 6 kW_p overall; two hydroelectric turbines (1 kW and 2.7 kW); a CHP system with 15 kW_e and 38 kW_{th}, diesel-powered (but authors envision its substitution with H_2 in the near term). A grid-connection is maintained, although the set-up is actually an independent stand-alone system.

Fig. 14

The EL is an alkaline 34 kW at 25 bar with a hourly production rate of 8 Nm^3/h. To avoid damages to the EL (which can occur through internal contaminations due to excessive on/off cycles), batteries are connected to the DC bus-bar to smooth fluctuations and reduce the risk of cycling the EL on and off too frequently. The batteries are high-density (1000 Wh/kg) and high-temperature (300°C) and can be connected in series to form high voltage strings in order to raise bus-bar voltage to 620 V with a capacity of 32 Ah corresponding to 20 h autonomy.

The H_2 tanks store a capacity of 22.8 m^3 and can operate up to 137 bar for a maximum capacity of 2856 Nm^3. The two FCs are PEM, one capable of CHP mode (2

ACCEPTED MANUSCRIPT

kW_e at 24 V, 2 kW_{Th}), the other one is only electrical at 5 kW_e.

An important issue in combining many different sub-systems is the need to design a control system capable of keeping the bus-bar voltage inside a range that is safe for all the various connected sub-systems. The authors hence decided to perform a computer simulation that, using as control parameter the battery state of charge and data-sets like wind velocity, solar radiation, load profiles, run over a period of time of one year to find the criticalities of the overall system.

Simulation variables are the on/off state of charge levels and hysteresis, which is run by keeping constant the set-points of the systems connected to the bus-bar. The battery state of charge is not as impactful on the on/off EL cycling as much as the hysteresis which, if set to 20%, causes 500 on/offs while, if set to 5%, soar on/offs to 11000. Hysteresis must hence be kept the highest possible while carefully considering the generator needs and the battery storage levels.

The simulation shows that the most important sub-system to be controlled is the EL, whose limited number of on/off cycles brings about a higher energy loss due to the minimum power level at which the EL needs to operate. In Fig. 15, one hour operation is outlined; the EL switches on when the state of charge reaches 75%, as planned by the control system, and stops when reaching 68%.

The authors note that piping selection and installation need to be carefully chosen in order to avoid hydrogen leakages. Furthermore, simultaneous operations of different sub-systems makes it impossible to reach optimal working conditions for each of them [43]; this reduces overall efficiencies, causes higher maintenance costs, and can shorten life cycles for each of the of the single sub-systems except for the RES which work without any constraint from upstream systems.

ACCEPTED MANUSCRIPT

Fig. 15

5. Conclusions

The main results from the case-studies we have considered are hereafter briefly outlined.

1) Hybrid system performance and hence hydrogen costs are strongly correlated with total yearly solar irradiation; if PV cost is reduced to 1 USD/Wp, solar hydrogen production will be competitive and sustainable in areas where horizontal irradiation is not less than 8 GJ/m^2/year [23].

2) Economic feasibility is a function of PV, EL costs and solar irradiation, and up to date it seems only feasible if governmental incentive policies are in place [30].

3) Environmentally, the use of PV is one of the best choices. Typical conditions on installation site (irradiation, ambient temperature, module temperature) have an important impact on system performance and hydrogen production rates [31].

4) Energy conversion through a PV-EL-Storage-FC chain is much more complex than direct load supply, but avoids energy surplus losses and can store energy with high capacity for long periods therefore increasing energy availability [32]; an automated energy management system is crucial to obtaining an optimal overall system performance [32, 42].

5) RES fluctuations are smoothed by the downstream hybrid system [34] and PV-EL combination is extremely reliable [37]. Since EL can be switched on and off frequently if input current is highly variable, some back-up systems should be considered to

ACCEPTED MANUSCRIPT

stabilize EL input power in order to increase overall system performance [42].

6) The bigger the overall system dimension and integration, the higher the importance of satellite systems to assure safe and reliable operations. In big plants it's always a good idea to install in safe areas (nearly always outside the main buildings) the sub-systems that can increase risk factors in normal operations. Such systems can anyway be operated with a very high safety levels if correctly designed and maintained by professional teams [40].

7) It's very easy and feasible to combine other RES (biogas [38], wind, hydroelectric [41, 42]) with PV. Results show that efficiencies are close but lower than nominal. Electrical efficiency of a FC is lower than nominal, while thermal can be nominal [38], but FC has the capability to respond quickly and efficiently to changes in load conditions [41].

In Table 3 we summarize a comparison of the analyzed case-studies; reported efficiencies are in the range of 2.3% to 10,8% depending on system design and the number of conversion stages.

While most hydrogen storage is in compressed tanks, a few case-studies have employed metal hydride storage, while none considered storage in carbon nanostructures like nanotubes or activated carbons. Some employed back-up energy (from grid or batteries) to avoid low QoS to the load. No papers evaluated RES storage in the form of heat.

Only a few cases treated, although not extensively, issues related to legal norms and safety, which are absolutely of primary importance in systems where the energy vector is potentially dangerous and subject to technical as well as safety restrictions. Also leakage and embrittlement problems in piping systems has been nearly completely

ACCEPTED MANUSCRIPT

neglected, thus not permitting to correctly evaluate the collateral issues related to hydrogen transport.

When the economics of the systems are considered, no studies have taken into any consideration the impact, which will be of extreme prominence, of intangible costs and benefits (pollution reduction, better quality of life, higher GDP, stable energy supply, energetic independence...). Finally, we point out that no rigorous *Capital Budgeting* [44, 45] techniques are applied for correct investment analysis. Fully pondering the results of such analysis could result in different hybrid system design.

Understanding the complete economic picture could heavily change governmental incentive policies and modify the way people perceive the environmental and energy issue, providing for greater thrust in the development of a new energy system for the whole world.

ACCEPTED MANUSCRIPT

ACCEPTED MANUSCRIPT

References

[1] M.A.K. Lodhi, Photovoltaics and hydrogen: future energy options, Energy Convers Manage 18 (38) (1997) 1881-1893.

[2] M.A.H. Abdallah, S.S. Asfour, T.N. Veziroglu, Solar-hydrogen energy system for Egypt, Int J Hydrogen Energy 24 (1999) 505-517.

[3] F. Chen, N.Duic, L.M. Alves, M. de G. Carvalho, Renewislands – Renewable energy solutions for islands, Renewable & Sustainable Energy Reviews 11 (2007) 1888-1902.

[4] M.W. Melaina, Initiating hydrogen infrastructures: preliminary analysis of a sufficient number of initial hydrogen stations in the US, Int J Hydrogen Energy 28 (2003) 743 – 755.

[5] M.W. Melaina, Turn of the century refueling: A review of innovations in early gasoline refueling methods and analogies for hydrogen, Energy Policy 35 (2007) 4919-4934.

[6] J. Rifkin, The hydrogen economy, Penguin, 2002.

[7] J. Romm (ed.), The hype about hydrogen: fact and fiction in the race to save the climate, Island Press, 2004.

[8] H. Scheer, Solare Weltwirtschaft, Verlag Antje Kunstmann GmbH, Muenchen, 1999.

[9] H. Scheer, Energieautonomie – Eine neue Politik fuer erneuerbare Energien, Verlag Antje Kunstmann GmbH, Muenchen, 1999.

[10] M.A. Green, Solar cells: operating principles, technology and system applications, University of New South Wales, New South Wales, 1998.

[11] T. Jensen, Renewable Energy on small islands: forum for energy and development, 2000.

ACCEPTED MANUSCRIPT

[12] R. Kothari, D. Buddhi, R.L. Sawhney, Study of the effect of temperature of the electrolytes on the rate of production of hydrogen, Int J Hydrogen Energy 30 (2005) 251-263.

[13] J.R. Bolton, Solar photoproduction of hydrogen: a review, Solar Energy 1 (57) (1996) 37-50.

[14] S.S. Penner, Steps toward the hydrogen economy, Energy 31 (2006) 33–43.

[15] J.W. Halloran, Carbon-neutral economy with fossil fuel-base hydrogen energy and carbon materials, Energy Policy 35 (2007) 4839-4846.

[16] K.S. Lackner, A guide to CO2 sequesterization, Science 300 (2003) 1677-1678.

[17] H. Lund, B.V. Mathiesen, Energy system analysis of 100% renewable energy systems - The case of Denmark in years 2030 and 2050, Energy, article in press

[18] H. Lund, Renewable energy strategies for sustainable development, Energy, 6 (32) (2007) 912-919

[19] H. Lund, E. Münster, Integrated transportation and energy sector CO2 emission control strategies, Transport Policy, 5 (13) (2006) 426-433

[20] M.B. Blarke H. Lund, The effectiveness of storage and relocation options in renewable energy systems, Renewable Energy 7 (33) (2008) 1499-1507

[21] N. Auner, S. Holl, Silicon as energy carrier — Facts and perspectives, Energy 31 (2006) 1395–1402

[22] M. Milani, L. Montorsi, V. Golovitchev, Combined Hydrogen Heat Steam and Power Generation System, The 16 ISTVS Int. Conference, Turin November 25-28 2008

[23] E. Bilgen, Solar hydrogen from photovoltaic-electrolyzer systems, Energy Convers Manage 42 (2001) 1047-1057.

[24] A. Hammache, E. Bilgen, Photovoltaic hydrogen production for remote communities

ACCEPTED MANUSCRIPT

in Northern latitudes, Solar & Wind Technology 2 (4) (1987) 139-144.

[25] J.D. Duffie, W.A. Beckman, Solar engineering of thermal processes, New York, Wiley Interscience, 1980.

[26] K.L Kennerud, A technique for identifying the cause of performance degradation in cadmium sulfide solar cells, 4th IECEC, 561-566, 1969.

[27] B.Y.H. Liu, R.C. Jordan, The long term average performance of flat plate solar energy collectors, Solar Energy 7 (1963) 53–70.

[28] K.E. Cox, K.D. Williamson, Hydrogen: its technology and implications, Vol. 1, Boca Raton (FL, USA), CRC Press, 1977.

[29] C. Bilgen, E. Bilgen, An assessment on hydrogen production using central receiver solar systems, Int J Hydrogen Energy 9 (3) (1984) 197-204.

[30] E. Bilgen, Domestic hydrogen production using renewable energy, Solar Energy 77 (2004) 47-55.

[31] G.E. Ahmad, E.T. El Shenawy, Optimized photovoltaic system for hydrogen production, Renewable Energy 31 (2006) 1043-1054.

[32] A.M. Chaparro, J. Soler, M.J. Escudero, L. Daza, Testing an isolated system powered bysolar energy and PEM FC with hydrogen generation, FCs Bullettin, 10-12, November 2003.

[33] A.M. Chaparro, J. Soler, M.J. Escudero, E.M.L. de Ceballos, U. Wittstadt, L. Daza, Data results and operational experience with a solar hydrogen system, Journal of Power Sources 144 (2005) 165-169.

[34] J.W. Hollenberg, E.N. Chen, K. Lakeram, D. Modroukas, Development of a photovoltaic energy conversion system with hydrogen energy storage, Int. J. Hydrogen Energy 3 (20) (1995) 239-243.

ACCEPTED MANUSCRIPT

[35] S. Galli, M. Stefanoni, Development of a solar-hydrogen cycle in Italy, Int. J. Hydrogen Energy 5 (22) (1997) 453-458.

[36] P. Hollmuller, J.M. Joubert, B. Lachal, K. Yvon, Evaluation of a 5 kWp photovoltaic hydrogen production and storage installation for a residential home in Switzerland, Int. J. Hydrogen Energy 25 (2000) 97-109.

[37] P. A. Lehman, C. E. Chamberlin, G. Pauletto and M. A. Rocheleau, Operating experience with a photovoltaic-hydrogen energy system, Int. J. Hydrogen Energy 5 (22) (1997) 465-470.

[38] L. Hedström, C. Wallmark, P. Alvfors, M. Rissanen, B. Stridh, J. Ekman, Description and modelling of the solar–hydrogen–biogas-FC system in GlashusEtt, Journal of Power Sources 131 (2004) 340–350.

[39] S. Aronsson, Fjärrvärmekunders värme-och effektbehov, Teknologtryck, Chalmers, Göteborg, 1996.

[40] A. Szyszka, Ten years of solar hydrogen demonstration project at Neunburg vorm Wald, Germany, Int. J. Hydrogen Energy 10 (23) (1998) 849-860.

[41] K. Agbossou, R. Chahine, J. Hamelin, F. Laurencelle, A. Anouar, J.M. St-Arnaud, T.K. Bose , Renewable energy systems based on hydrogen for remote applications, Journal of Power Sources 96 (2001) 168-172.

[42] M. Little, M. Thomson, D. Infield, Electrical integration of renewable energy into stand-alone power supplies incorporating hydrogen storage, International Journal of Hydrogen Energy 32 (2007) 1582–1588.

[43] M. Little, M. Thomson, D. Infield, Control of a DC-interconnected renewable-energy-based stand-alone power supply, presented at Universities Power Engineering Conference, Cork, 2005.

ACCEPTED MANUSCRIPT

[44] R.A. Brealey, S.C. Myers, Capital investment and valuation, McGraw-Hill, 2003.

[45] R.N. Anthony et al., Management Control Systems, McGraw-Hill, 2003.

ACCEPTED MANUSCRIPT

ACCEPTED MANUSCRIPT

Figure Captions

Fig. 1 System schematics [23].

Fig. 2 System efficiency for fixed and tracking PV (left). System costs and yearly irradiation on a horizontal plane (right) [23].

Fig. 3 H_2 energy in GJ per kW_p produced yearly as a function of solar irradiation on a horizontal plane (left). Costs as a function of PV and EL system prices over solar irradiation (right) [30].

Fig. 4 Hybrid system layout with conversion energy paths: (1) PV direct to load, (2) with H_2 production, storage and use [33].

Fig. 5 Converted PV power as logged from a two summer days test (path 1 solid line, path 2 dotted line) [32].

Fig. 6 H_2 production and FC energy delivered between May 2003 and May 2004 [33].

Fig. 7 Relevant data during one day of test [36].

Fig. 8 Energy losses and storage in percentages for the overall system [36].

Fig. 9 Daily average cumulated efficiencies of the PV and H_2 production from January 1st to November 30th, 2003 [37].

Fig. 10 Efficiencies during a day operations with sunny conditions [37].

Fig. 11 Load power and solar radiation during a day with variable meteo conditions [37].

Fig. 12 Hybrid system schematics [38].

Fig. 13 Output power and H_2 flow over a five-day period [41].

Fig. 14 West Beacon Farm plant schematic [42].

Fig. 15 EL operations from wind power [43].

ACCEPTED MANUSCRIPT

ACCEPTED MANUSCRIPT

Tables

Table 1 Average values during a summer monitoring [33].

Data	Average Value
Energy from solar radiation	81.9 kWh
PV converted energy	4.9 kWh
EL energy	1.5 kWh
H_2 produced	0.33 Nm^3 (1kWh, LHV)

Table 2 Measurements over the three-day period [36].

Solar radiation (kWh/m^2)	PV gross (kWh)	PV net (kWh)	H_2 gross (Nm^3)	H_2 net (Nm^3)
6.1	-	27.8	6.2	5.9
1.6	7.2	6.4	1.5	1.4
3.0	13.1	11.4	2.7	2.5

ACCEPTED MANUSCRIPT

Table 3 Comparison of the case-studies.

Project	Simulated vs Real	Stand Alone	Grid Connect	Stationary vs Non Stationary	PV	Electrolyzer	Back-up Battery	Pressure Tank	Hydride	Carbon	Fuel Cell	Control	Modelling	Legal & Safety Analisys	Piping & Materials	Overall Efficiency %	Cost Analysis (H_2 cost)	NPV & Intangible Costs Analysis
Bilgen 2001	Sim.	√		Stat.	√	√							√			9.3-10.3 (fixed) 9.9-10.8 (tracking)	√ (44.5 USD/GJ)	
Bilgen 2004	Sim.	√		Non Stat.	√	√							√			8.6-9.3	√ (26-268 USD/GJ)	
Ahmad 2006	Real	√		Stat.	√	√						MPPT				2.3		
FIRST 2003	Real	√		Stat.	√	√	√		√		√	Energy Mgmt, Data-Log				6-7		
Cooper Union 1995	Sim. & Real	√		Stat.	√	√		√	√		√		√					
ENEA 1997	Real	√		Stat.	√	√		√	√		√	Energy Mgmt		√				
Zollbruck 2000	Sim. & Real		√	Stat. & Non Stat.	√	√	√	√	√		√					4.2 (prior to FC)		
Schatz 1997	Real	√	√	Stat.	√	√		√			√	Energy Mgmt		√		6.2 (H2 Production)		
SWB 1998	Real		√	Stat. & Non Stat.	√	√		√			√	Industry-level		√				
GlashusEtt 2004	Sim. & Real		√	Stat.	√	√		√			√	Energy Mgmt, Data-Log	√				√	
HRI 2001	Real	√		Stat.	√ + Wind	√	√	√			√							
HaRI 2007	Real		√	Stat.	√ + Wind, Water, CHP	√	√	√			√							

ACCEPTED MANUSCRIPT

ACCEPTED MANUSCRIPT

FIGURES

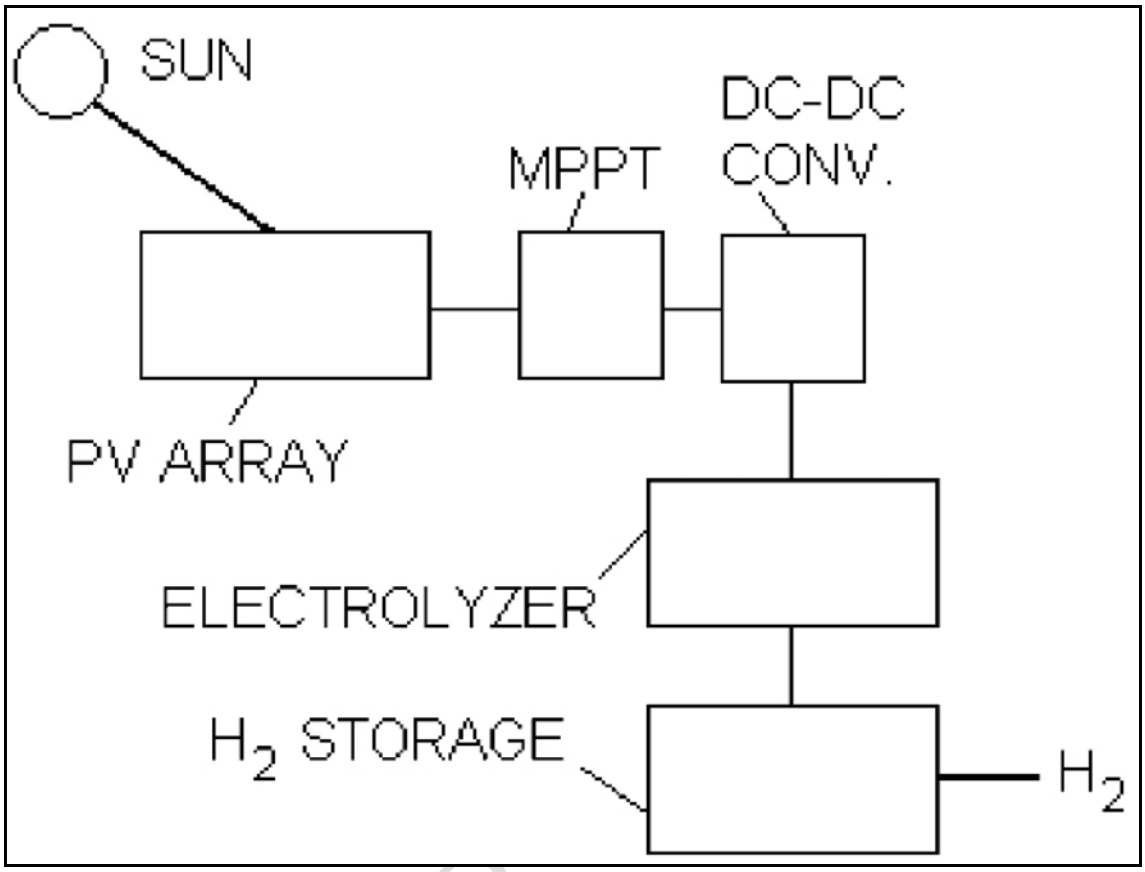

Fig. 1 - System schematics [23].

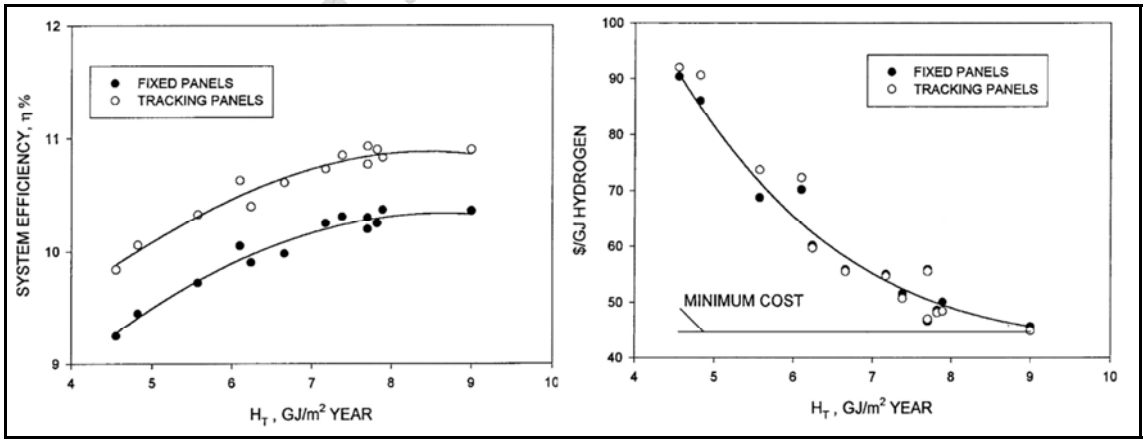

Fig. 2 - System efficiency for fixed and tracking PV (left). System costs and yearly irradiation on a horizontal plane (right) [23].

ACCEPTED MANUSCRIPT

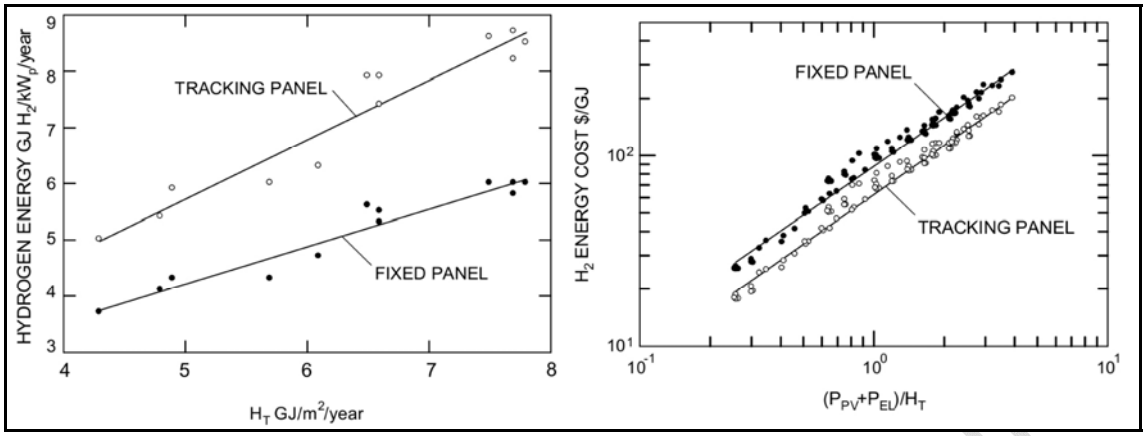

Fig. 3 - H_2 energy in GJ per kW_p produced yearly as a function of solar irradiation on a horizontal plane (left). Costs as a function of PV and EL system prices over solar irradiation (right) [30].

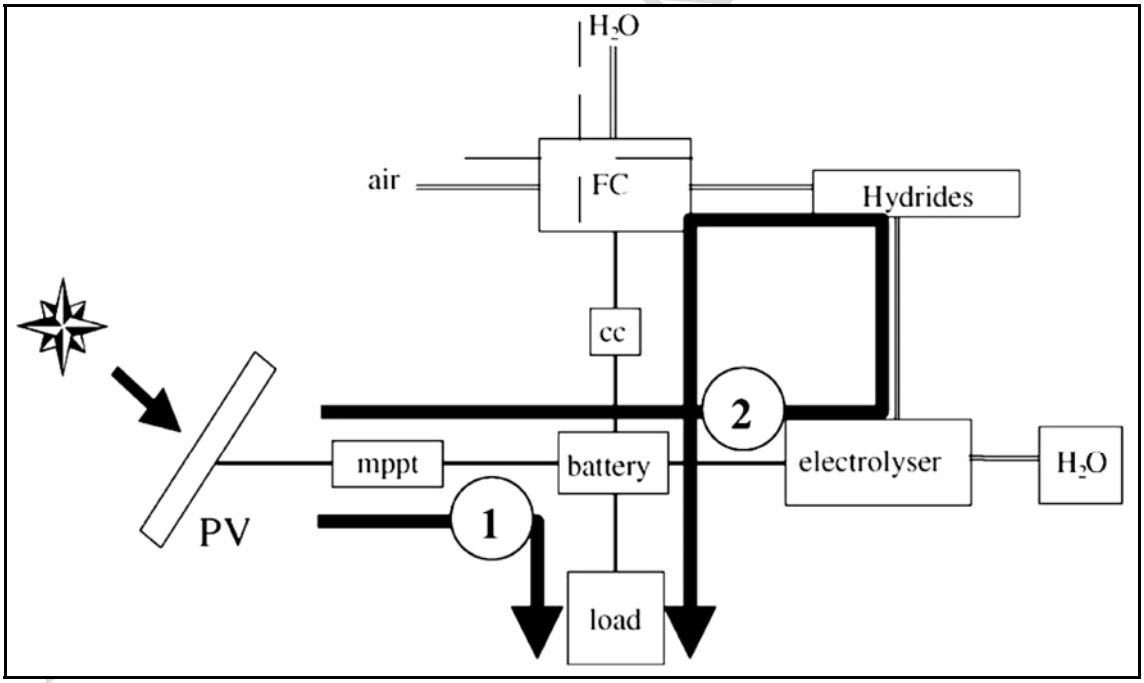

Fig. 4 - Hybrid system layout with conversion energy paths: (1) PV direct to load, (2) with H_2 production, storage and use [33].

ACCEPTED MANUSCRIPT

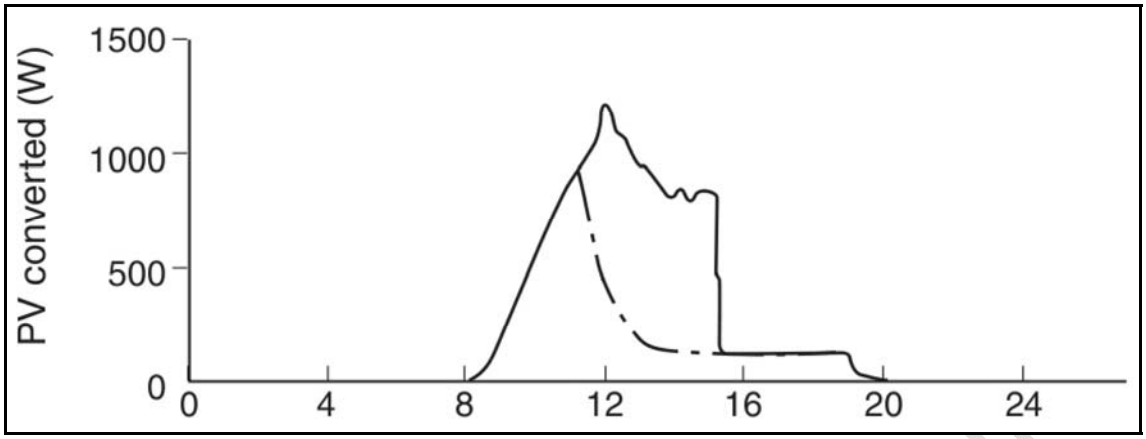

Fig. 5 - Converted PV power as logged from a two summer days test (path 1 solid line, path 2 dotted line) [32].

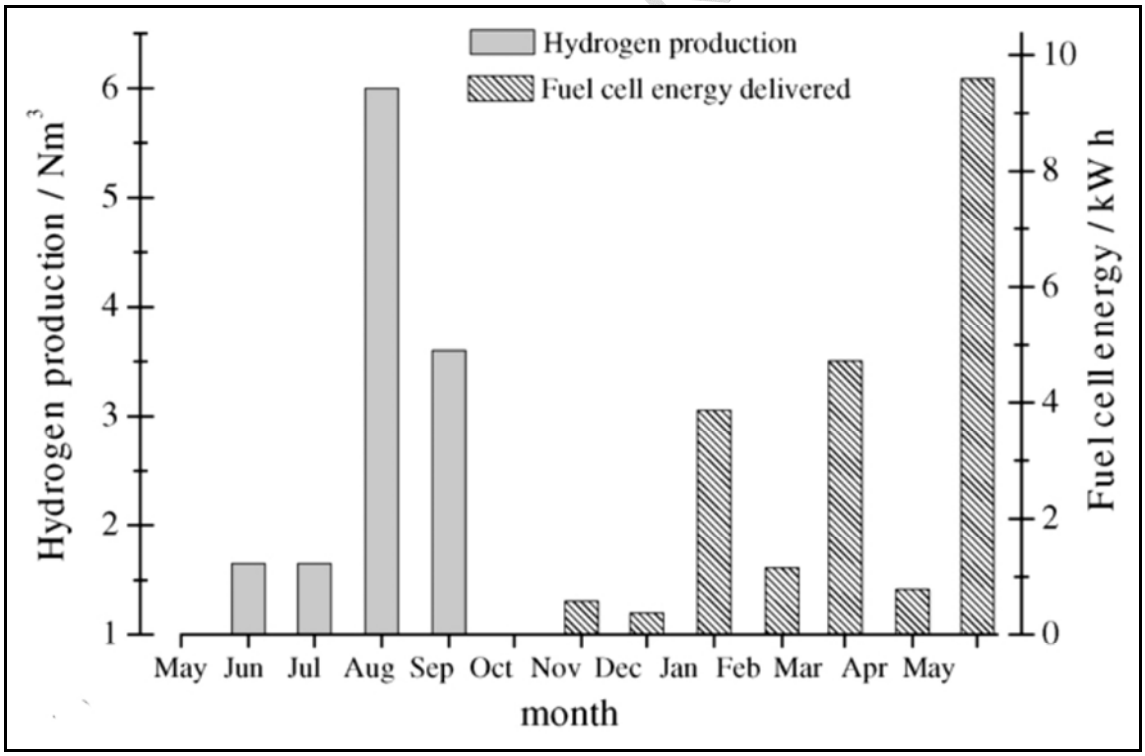

Fig. 6 - H_2 production and FC energy delivered between May 2003 and May 2004 [33].

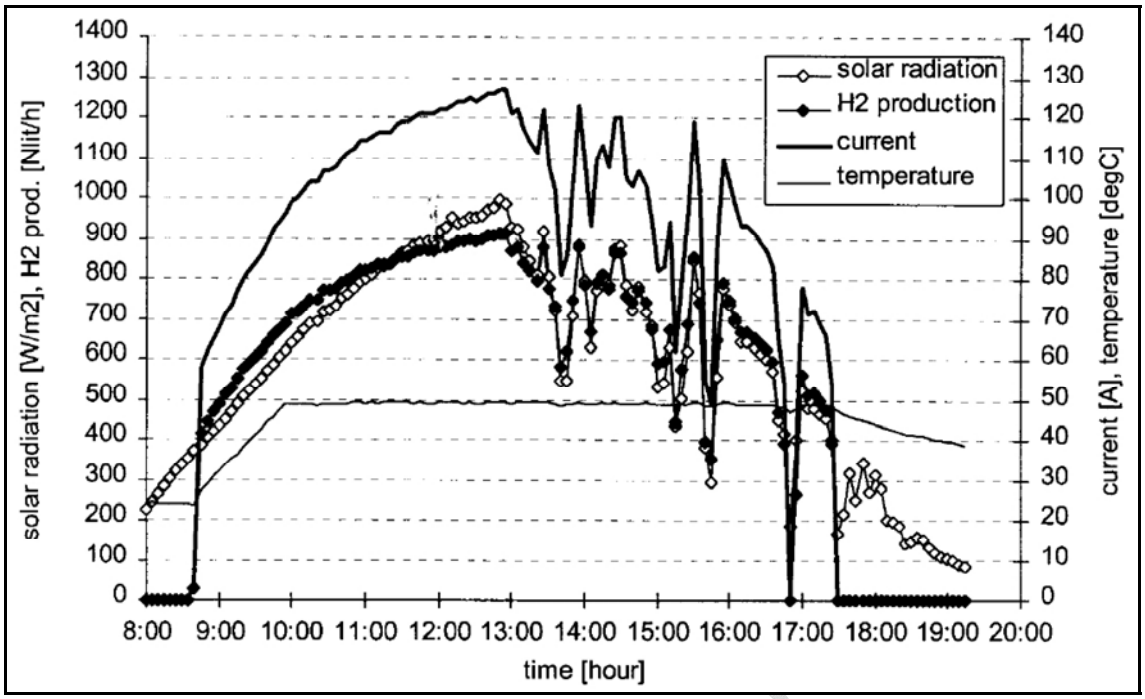

Fig. 7 - Relevant data during one day of test [36].

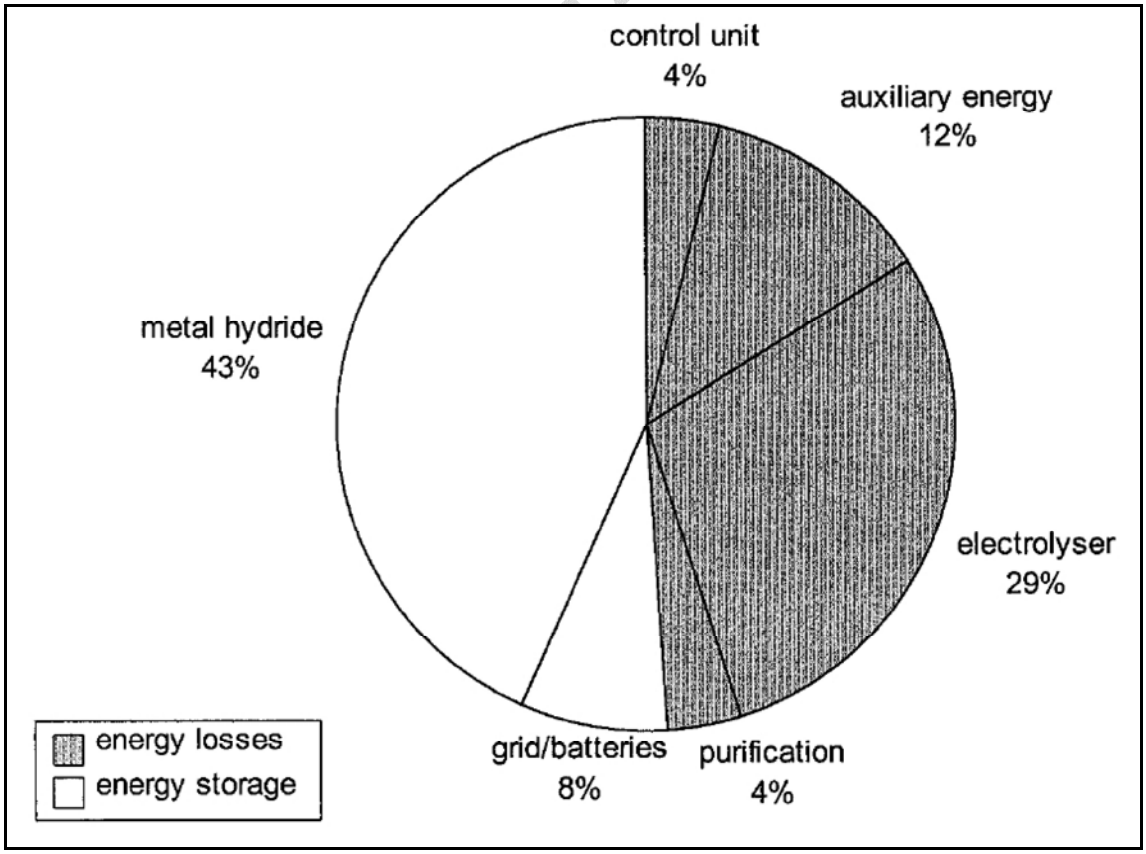

Fig. 8 - Energy losses and storage in percentages for the overall system [36].

ACCEPTED MANUSCRIPT

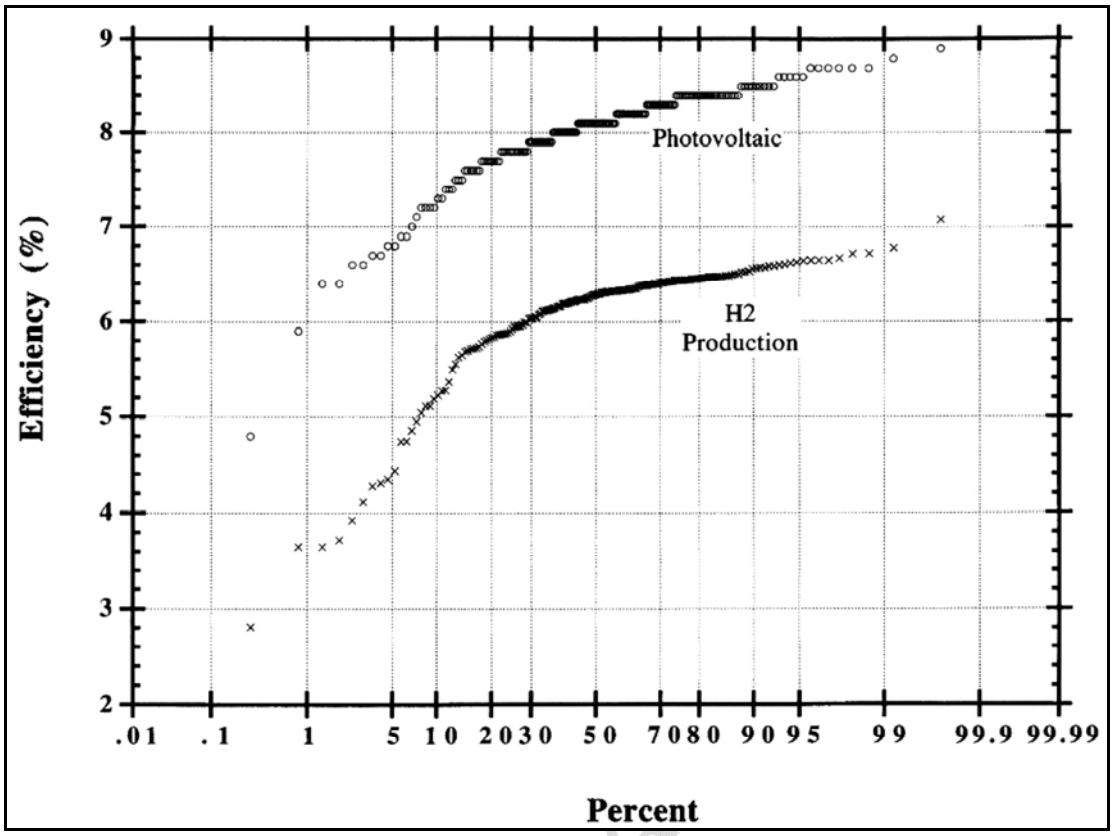

Fig. 9 - Daily average cumulated efficiencies of the PV and H_2 production from January 1st to November 30th, 2003 [37].

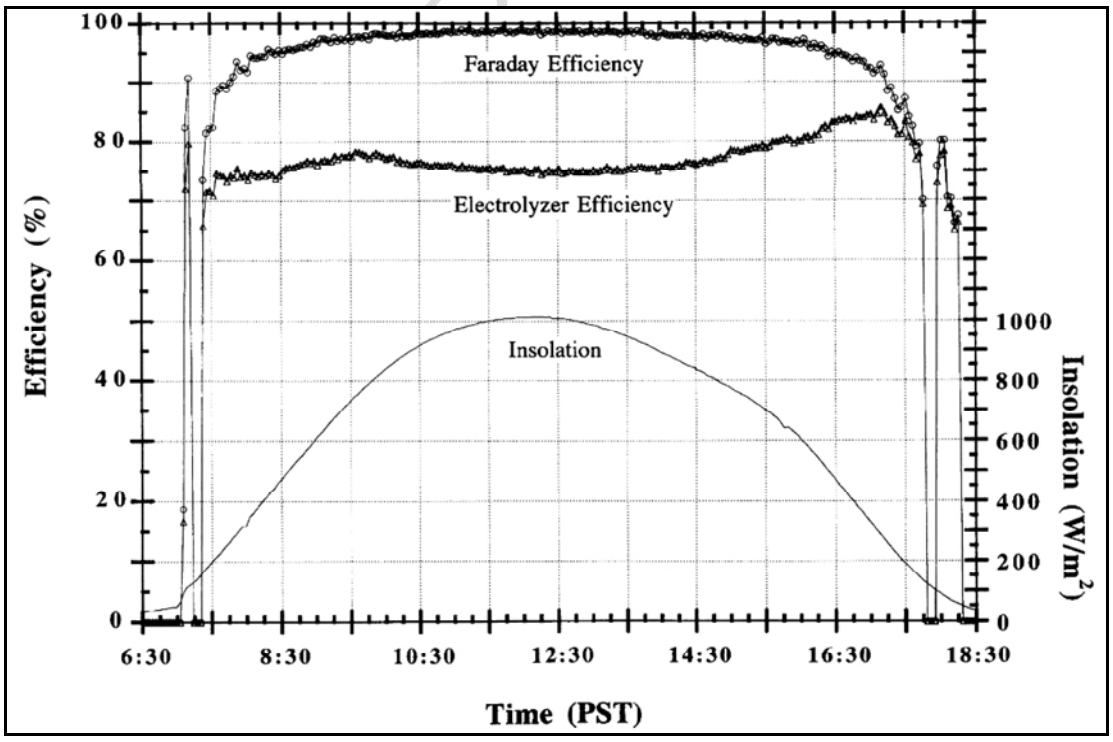

Fig. 10 - Efficiencies during a day operations with sunny conditions [37].

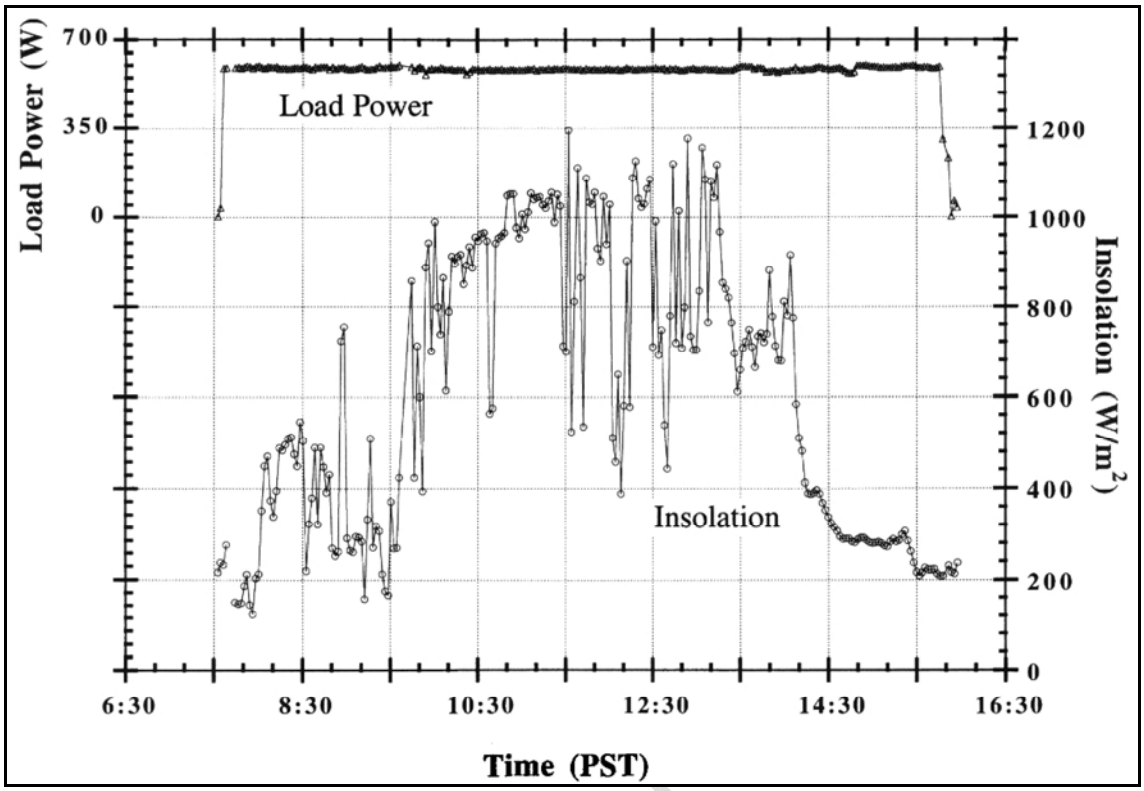

Fig. 11 - Load power and solar radiation during a day with variable meteo conditions [37].

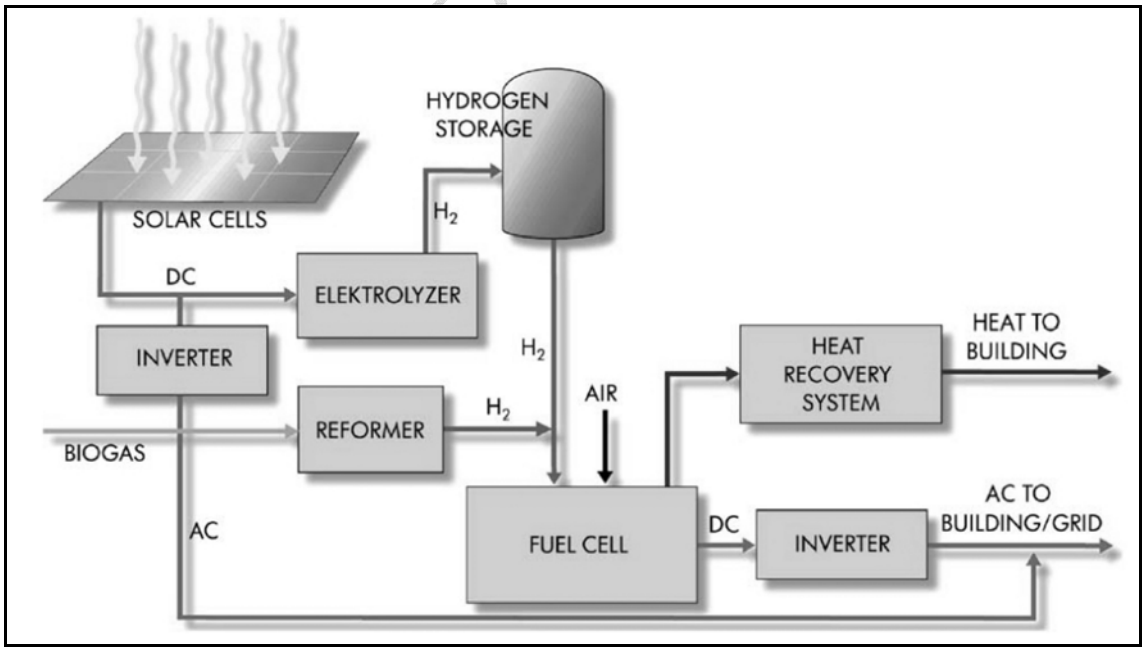

Fig. 12 - Hybrid system schematics [38].

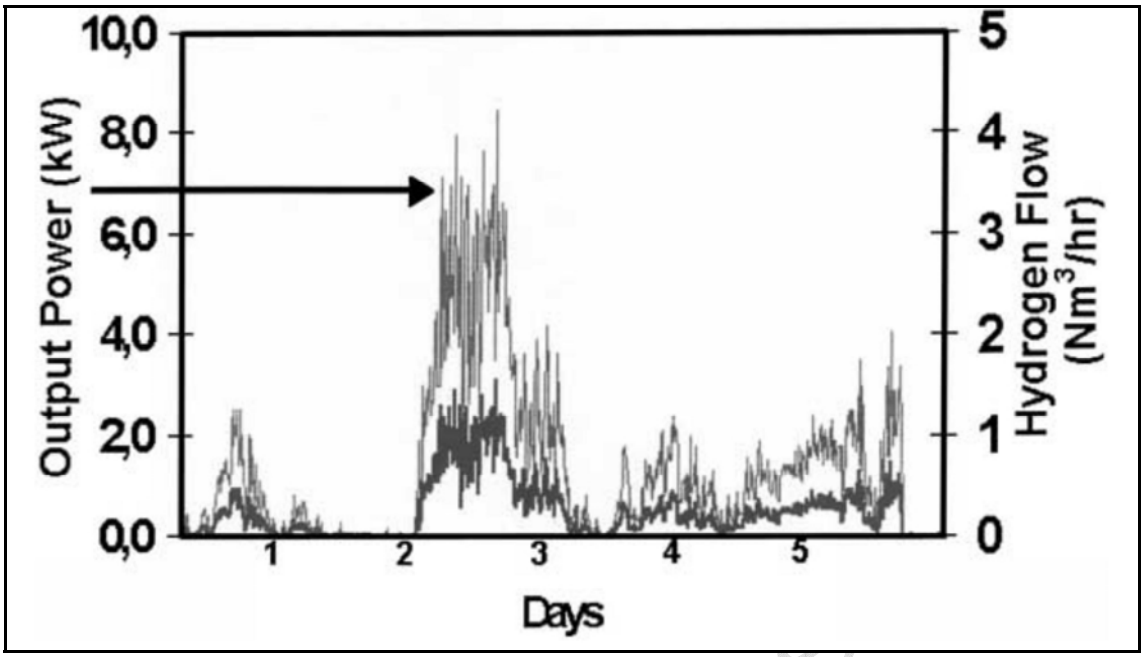

Fig. 13 - Output power and H_2 flow over a five-day period [41].

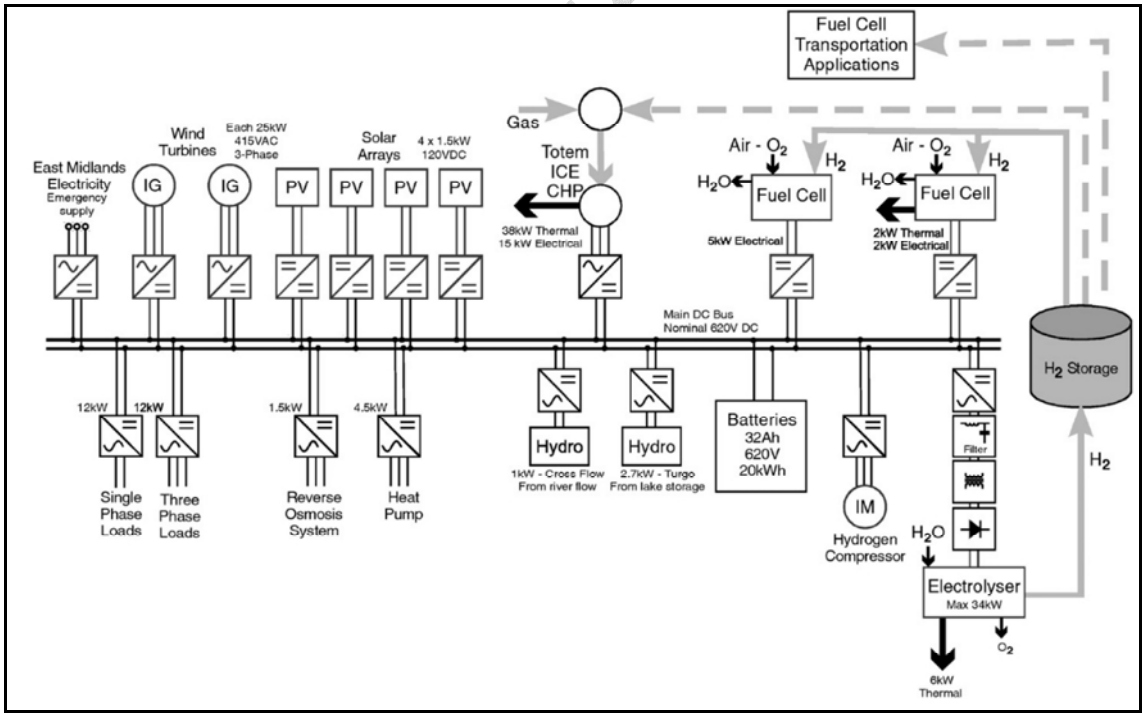

Fig. 14 - West Beacon Farm plant schematic [42].

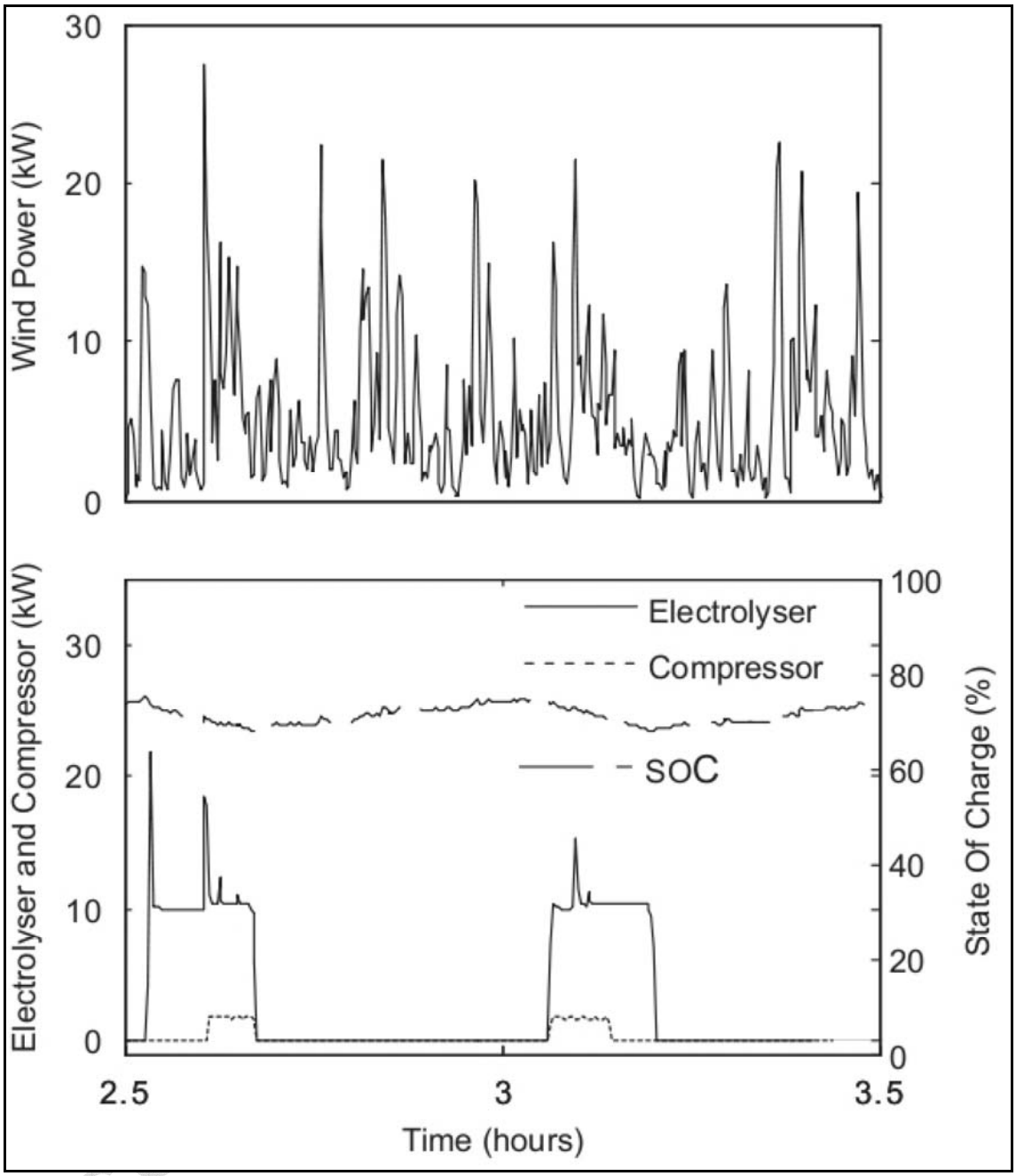

Fig. 15 - EL operations from wind power [43].