HAL open science

Minimal-time bioremediation of natural water resources

Pedro Gajardo, Jérôme Harmand, Hector Ramirez Cabrera, Alain Rapaport

To cite this version:

Pedro Gajardo, Jérôme Harmand, Hector Ramirez Cabrera, Alain Rapaport. Minimal-time bioremediation of natural water resources. Automatica, 2011, 47 (8), pp.1764-1769. 10.1016/j.automatica.2011.03.001 . hal-00521118v2

HAL Id: hal-00521118

https://hal.science/hal-00521118v2

Submitted on 20 May 2011

HAL is a multi-disciplinary open access archive for the deposit and dissemination of scientific research documents, whether they are published or not. The documents may come from teaching and research institutions in France or abroad, or from public or private research centers.

L'archive ouverte pluridisciplinaire **HAL**, est destinée au dépôt et à la diffusion de documents scientifiques de niveau recherche, publiés ou non, émanant des établissements d'enseignement et de recherche français ou étrangers, des laboratoires publics ou privés.

Minimal-time bioremediation of natural water resources

P. Gajardo[1], H. Ramírez[2], A. Rapaport[3*] and J. Harmand[4*]

[1] Departamento de Matemática, Universidad Técnica Federico Santa María. Avda. España 1680, Valparaíso, Chile.
Email: pedro.gajardo@usm.cl
[2] Departamento de Ingeniería Matemática and Centro de Modelamiento Matemático (CNRS UMR 2807)
Universidad de Chile. Avda Blanco Encalada 2120, Santiago, Chile.
E-mail: hramirez@dim.uchile.cl
[3] UMR 'MISTEA' Mathématiques, Informatique et STatistique pour l'Environnement et l'Agronomie
(INRA/SupAgro) 2, place P. Viala, 34060 Montpellier, France.
E-mail: rapaport@supagro.inra.fr
[4] Laboratoire de Biotechnologie de l'Environnement, Route des Etangs, 11100 INRA Narbonne, France.
E-mail: harmand@supagro.inra.fr

Abstract

We study minimal time strategies for the treatment of pollution of large volumes, such as lakes or natural reservoirs, with the help of an autonomous bioreactor. The control consists in feeding the bioreactor from the resource, the clean output returning to the resource with the same flow rate. We first characterize the optimal policies among constant and feedback controls, under the assumption of a uniform concentration in the resource. In a second part, we study the influence of an inhomogeneity in the resource, considering two measurements points. With the help of the Maximum Principle, we show that the optimal control law is non-monotonic and terminates with a constant phase, contrary to the homogeneous case for which the optimal flow rate is decreasing with time. This study allows the decision makers to identify situations for which the benefit of using non-constant flow rates is significant.
Keywords. Environmental engineering, biotechnology, waste treatment, continuous systems, minimum-time control.

1 Introduction

The fight against eutrophication of lakes and natural reservoirs (excessive development of phytoplankton associated with an excess of nutrients) constitutes a major challenge. Such an ecological question has given rise to many studies over the last 30 years (see, for instance, the surveys [8] or [25] and references herein). To remediate to eutrophication, many techniques such as bio-manipulation or ecological control have been proposed with mitigated results. A common point of the proposed remediation approaches is that they are usually based on "biotic" actions on the lake trophic chain dedicated to the restoration of the equilibrium of the local ecosystems. To do so, most studies are based on empirical knowledge. However, since the seventies, the use of eutrophication models (from heuristic data-based models at steady state to more recent dynamical mass-balance based models) together with optimal control techniques have been proposed (cf. [6] and references herein).

In the present paper, an alternative to these techniques is studied using a very simple model of the lake. It is assumed that a small bioreactor is available to treat the polluted water in removing a substrate considered as being in excess in the lake water. More particularly, we consider a natural water resource of volume V polluted with a substrate of concentration S_l. As underlined above, typical examples of such

*A. Rapaport and J. Harmand are with the Equipe-projet INRA-INRIA 'MODEMIC' (Modélisation et Optimisation des Dynamiques des Ecosystèmes MICrobiens)

natural water resources to be treated are lakes or water tables that have been contaminated with diffused pollutant as organic matter or nutrients. The objective of the treatment is to make the concentration of such pollutant/contaminant S_l decreasing down, as fast as possible, to a prescribed value $\underline{S_l}$, with the help of a continuous stirred bioreactor of volume V_r. The reactor is fed from the resource with a flow rate Q, and its output returns to the resource with the same flow rate Q, after separation of biomass and substrate in a settler (see Figure 1). The settler avoids the presence of excessive biomass used for the treatment in the natural resource, that could bring undesirable sludge and possibly lead to an increase of the eutrophication. We assume that during the whole treatment, the volume V of the resource does not change.

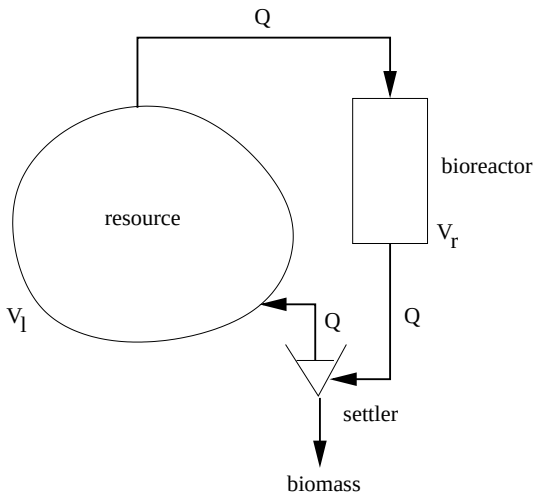

Figure 1: Interconnection of the bioreactor with the resource.

Since the pioneer work by [5], the optimization of bioreactors operation has received a great attention in the literature; see [19, 3, 2] for reviews of the different optimization techniques that have been used in bioprocesses. Among them, the theory of optimal control has proved to be a generic tool for deriving practical optimal rules [10, 23, 22]. Clearly, one can distinguish two different kinds of problems depending on the continuous or discontinuous operation mode of the process. On one hand, if the process is operated in fed-batch, the control objective is usually to optimize trajectories for attaining a prescribed target in finite time or maximizing the production at a given time [9, 15, 12, 11, 14, 21, 29, 18, 28, 7, 17]. On the other hand, the optimal control of continuous processes usually involves a two steps procedure. First, the optimal steady state is determined as a nominal set point, maximizing a criterion [27, 26]. The benefit of operating a periodic control about the nominal point can be analyzed [1, 20]. Then, a control strategy that drives the state about the nominal set point from any initial condition is searched for [13], possibly in the presence of uncertainty on the model using extremum seeking techniques [30, 31, 16, 4]

Concerning these strategies, the problem studied in the present paper exhibits several original points with respect to the contributions available in the literature. Indeed:

- The actual control problem is dedicated to the optimization of transient trajectories - as in the case of fed-batch processes - while it is actually a continuous process. It is due to the fact that in a standard optimal minimal-time problem of a bioprocess, the volume of water to be processed is completely decoupled from the bioreactor. In other terms, the problem is to process, using a biological reactor, a given volume of "substrate" which is finally released in the environment after processing (whatever it is operated continuously or discontinuously). In the present problem, the treated water is immediately recycled into the lake. From the modelling point of view, this introduces an original coupling via the dilution of the treated water with the polluted one.

- The lake and the reactor are isolated in the sense no biomass is supposed to be present in the water resource. The biomass used as a catalyst in the bioreactor is separated from the treated water and withdrawn from the overall process. Thus, in particular, the quantity of available biomass is not a limiting parameter.

We consider the usual chemostat model for describing the dynamics of the bioreactor:

$$\begin{cases} \dot{S}_r &= -\mu(S_r)X_r + \dfrac{Q}{V_r}(S_l - S_r) \\ \dot{X}_r &= \mu(S_r)X_r - \dfrac{Q}{V_r}X_r \end{cases} \tag{1}$$

where S_r and X_r stand for the concentrations of substrate and biomass, respectively. For sake of simplicity, we assume that the yield coefficient of this reaction is equal to one (at the price of changing the unitary value of the biomass concentration, that is always possible). The growth rate function $\mu(\cdot)$ fulfills the properties

Assumption A1.
a. Function $\mu(\cdot)$ is increasing and such that $\mu(0) = 0$.
b. Function $\mu(\cdot)$ is concave.

A reasonable hypothesis is to assume that the volume of the resource is much larger than the bioreactor one: $V >> V_r$, and that the possible variations of the manipulated variable Q are slow compared to the time scale of the bioreactor dynamics. Consequently, one can consider that dynamics (1) is fast and its trajectories at the quasi-steady state $(S_r^\star, X_r^\star) = (S_r(Q), S_l - S_r(Q))$, where $S_r(Q)$ fulfills $\mu(S_r(Q)) = Q/V_r$ (see the usual equilibria analysis of the chemostat [24]).

Problem: The optimization problem consists in driving in minimal time the concentration of the resource down to a prescribed value $\underline{S}_l > 0$, playing with the control variable $Q > 0$. In Section 2, we assume that this concentration is uniform in the resource, while in Section 3 we study the effect of a spatial inhomogeneity. For each case, we characterize the optimal policy $Q^\star$ (resp. $Q^{opt}(\cdot)$) among constant (resp. feedback controls). Section 4 is devoted to numerical simulations and discussions.

2 The homogeneous case

The dynamics of the resource concentration is simply

$$\dot{S}_l = \frac{Q}{V}(S_r(Q) - S_l). \tag{2}$$

Notice that under Assumption A1.a, choosing Q is equivalent to choosing S_r as a control variable:

$$\dot{S}_l = \alpha\mu(S_r)(S_r - S_l), \quad S_r \in (0, S_l) \tag{3}$$

where we denote $\alpha = V_r/V$.

Proposition 1 *Under Assumption A1, the best constant control $Q^\star$ is defined as $Q^\star = V_r\mu(S_r^\star)$, where $S_r^\star$ is the unique minimum of the function*

$$T_f(S_r) = \frac{1}{\alpha\mu(S_r)} \ln\left(\frac{S_l(0) - S_r}{\underline{S}_l - S_r}\right) \tag{4}$$

on the interval $(0, \underline{S}_l)$.

Proof. For a constant control, solutions of (2) can be made explicit:

$$S_l(t) = S_r(Q) + (S_l(0) - S_r(Q))e^{-\frac{Q}{V}t}, \tag{5}$$

as well as the time $T_f(S_r)$, given in (4), for reaching the target with $Q = V_r\mu(S_r)$. The function $T_f(\cdot)$ tends toward $+\infty$ when S_r tends toward 0 or $\underline{S}_l$. Consequently, its infimum is reached on the interval $(0, \underline{S}_l)$. Denote by $T_f^\star$ its minimum, that we fix in the following. Then, for each constant control S_r, one has

$$\begin{aligned}
\frac{dS_l(T_f^\star)}{dS_r} &= 1 - \left[1 + \alpha\mu'(S_r)T_f^\star(S_l(0) - S_r)\right] e^{-\alpha\mu(S_r)T_f^\star} \\
\frac{d^2S_l(T_f^\star)}{dS_r^2} &= \left[2\mu'(S_r) + (\alpha\mu'(S_r)^2T_f^\star - \mu''(S_r)(S_l(0) - S_r^*)\right] \alpha T_f^\star e^{-\alpha\mu(S_r)T_f^\star}
\end{aligned}$$

and one deduces with Assumption A1 that the map $S_r \mapsto S_l(T_f^\star)$ is strictly convex. Notice that one has necessarily $S_l(T_f^\star) \geq \underline{S}_l$ and $S_l(T_f^\star) = \underline{S}_l$ when $S_r = S_r^\star$ realizes the minimum of the function $T_f(\cdot)$. Consequently, the optimal control $S_r^\star$ is unique. □

Proposition 2 *Under Assumption A1, the optimal feedback fulfills $Q^{opt}(S_l) = V_r\mu(S_r^{opt}(S_l))$ with*

$$S_r^{opt}(S_l) \in \underset{S_r \in (0,S_l)}{\operatorname{argmax}}\, \mu(S_r)(S_l - S_r)\ . \tag{6}$$

Moreover, $t \mapsto Q^{opt}(t)$ is decreasing along any optimal trajectory.

Proof. It is straightforward to check that the optimal feedback S_r^{opt} is the one that makes the time derivative of S_l, given by (3), the most negative at any time. A necessary condition is to have have $\mu'(S_r^{opt})(S_l - S_r^{opt}) = \mu(S_r^{opt})$. Deriving this last expression w.r.t. time, one has $\dot{S}_r^{opt}(2\mu'(S_r^{opt}) + \mu''(S_r^{opt})(S_r^{opt} - S_l)) = \mu'(S_r^{opt})\dot{S}_l$ and from Assumption A1, on obtains $\dot{S}_r^{opt} < 0$. □

For usual growth functions, one obtains the expressions:

linear: $\mu(s) = \mu s$,	Monod: $\mu(s) = \dfrac{\mu_{\max} s}{K + s}$,
$S_r^{opt}(S_l) = S_l/2$	$S_r^{opt}(S_l) = \sqrt{K^2 + KS_l} - K$

3 Consideration of a spatial inhomogeneity

The simplest way to introduce a gradient of concentration in the model of the resource is to consider two compartments of volumes V_1, V_2 such that $V = V_1 + V_2$ (see Figure 2), that we assume to be large with respect to V_r. Water is pumped from the first one while the clean one is rejected in the second one.

Denoting $\alpha_i = V_r/V_i$ $(i = 1, 2)$, one obtains the dynamics

$$\begin{aligned}
\dot{S}_1 &= \frac{Q}{V_1}(S_2 - S_1) = \alpha_1\mu(S_r)(S_2 - S_1) \\
\dot{S}_2 &= \frac{Q}{V_2}(S_r(Q) - S_2) = \alpha_2\mu(S_r)(S_r - S_2)
\end{aligned} \tag{7}$$

and can easily check that the domain $\mathcal{D} = \{(S_1, S_2) \in \mathbb{R}_+^2 \,|\, S_1 \geq S_2\}$ is invariant for any control $S_r(\cdot)$ such that $S_r(t) \in (0, S_2(t)]$ for any $t > 0$. We shall consider initial conditions in $\mathcal{D}$ and define the target $\mathcal{T} = \{(S_1, S_2) \in \mathcal{D} \,|\, S_1 \leq \underline{S}_l\}$.

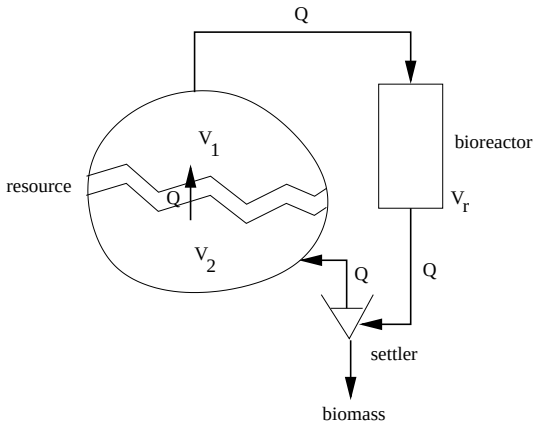

Figure 2: Consideration of non-homogeneity in the resource.

For $p \in [0,1]$ and $\tau \geq 0$, we define the function

$$A(p,\tau) = \left| \begin{array}{ll} e^{-\alpha\tau} & \text{if } p = 0 \\ \dfrac{(1-p)e^{-\frac{\alpha\tau}{1-p}} - pe^{-\frac{\alpha\tau}{p}}}{1-2p} & \text{if } p \in (0, \frac{1}{2}) \\ \left(1 + \dfrac{\alpha}{2}\tau\right) e^{-\frac{\alpha\tau}{2}} & \text{if } p = \frac{1}{2} \\ A(1-p,\tau) & \text{if } p \in (\frac{1}{2}, 1] \end{array} \right.$$

and for $S_0 > \underline{S}_l$ the function

$$B(S_r) = \frac{\underline{S}_l - S_r}{S_0 - S_r} \ , \qquad S_r \in (0, \underline{S}_l) \ .$$

Proposition 3 *Let $p = V_1/V$. For initial conditions such that $S_1(0) = S_2(0) = S_0 > \underline{S}_l$, the best constant control $Q^\star$ and time $T_f^\star$ to reach the target $\mathcal{T}$ are defined by $Q^\star = V_r\mu(S_r^\star)$, where $S_r^\star$ is such that the graph of $B(\cdot)$ touches tangentially the graph of $S_r \mapsto A(p, \mu(S_r)T_f^\star)$ at $S_r = S_r^\star$.*

Proof. The solution of (7) with constant control $S_r \in (0, \underline{S}_l)$ can be made explicit:

$$S_1(t) = S_r + (S_0 - S_r)A(p, \mu(S_r)t) \ ,$$

and the time T_f to reach the target fulfills $A(p, \mu(S_r)T_f) = B(S_r)$. Notice that one has the property

$$S_1(t) \geq \underline{S}_l \quad \Longleftrightarrow \quad A(p, \mu(S_r)t) \geq B(S_r) \ ,$$

from which the statement of the proposition follows. □

If one consider the family of functions $A_T(S_r) = A(p, \mu(S_r)T)$, parametrized by $T > 0$, one has a graphical interpretation of the optimum depicted in Figure 3.

$B(\cdot)$ is a concave function and one can check that $A_T(\cdot)$ are strictly convex for values of S_r large enough (under Assumption A1). Consequently, there cannot exist more than one best constant control $S_r^\star$ in the domain where $A_{T_f^\star}$ is convex.

Remark 1 *Notice that the case of an homogeneous resource can be seen formally as the limiting case $p = 0$ (although cases when p is close to 0 are not compatible with assuming that V_1, V_2 are large with respect to V_r). One can easily check that $A(p,\tau) < A(0,\tau)$ for sufficiently large values of τ. Furthermore, times $T_f^\star$ are increasing with respect to $S_0 - \underline{S}_l$. Consequently, for initial conditions such that S_0 is far from $\underline{S}_l$, the time $T_f^\star$ is larger for an homogeneous resource than for non-homogeneous one, even when the parameter p is unknown and the control $S_r^\star$ is determined for the homogeneous case.*

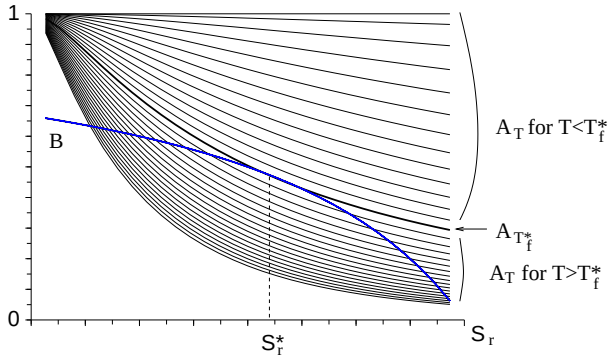

Figure 3: Graphical determination of $S_r^\star$ and $T_f^\star$.

For $S_1 > S_2 > 0$ and $\gamma > 0$, we define

$$\phi(S_1, S_2, \gamma, S_r) = \mu(S_r)\left[1 + \gamma\frac{(S_2 - S_r)}{(S_1 - S_2)}\right] , \tag{8}$$

$$\psi(S_1, S_2, \gamma) = \mu'(S_2) - \gamma\frac{\mu(S_2)}{S_1 - S_2} . \tag{9}$$

The proof of the following lemma is left to the reader.

Lemma 1 *Under Assumption A1, for $S_1 > S_2 > 0$ and $\gamma > 0$, the function $\phi(S_1, S_2, \gamma, \cdot)$ is strictly concave on $[0, S_2]$ and the property*

$$\max_{S_r \in (0,S_2]} \phi(S_1, S_2, \gamma, S_r) = \phi(S_1, S_2, \gamma, S_2)$$

is fulfilled exactly when $\psi(S_1, S_2, \gamma) \geq 0$.

Proposition 4 *Under Assumption A1, from any initial condition in $\mathcal{D} \setminus \mathcal{T}$, the optimal control $Q^{opt}(\cdot)$ consists in reaching a subset $\mathcal{I} \subset \mathcal{D} \setminus \mathcal{T}$ from which the constant control $Q^{opt} = V_r\mu(\underline{S}_2)$ is optimal until $S_1(\cdot)$ reaches $\underline{S}_l$, where $\underline{S}_2$ is the value of S_2 when $\mathcal{I}$ is reached. Moreover, $t \mapsto Q^{opt}(t)$ is increasing when approaching the set $\mathcal{I}$.*

Proof. Recall first that $\mathcal{D}$ is invariant. If $S_1 = S_2 > \underline{S}_l$, the feedback $S_r = S_2$ cannot be optimal (this would imply $\dot{S}_1 = \dot{S}_2 = 0$ at any time). So, any optimal trajectory is such that $S_1(t) > S_2(t)$ for any $t > 0$. Let us write the Hamiltonian, along with the adjoint equations:

$$H = -1 + \max_{S_r \in [0,S_2]} \mu(S_r)\left[\alpha_1\lambda_1(S_2 - S_1) + \alpha_2\lambda_2(S_r - S_2)\right]$$

$$\begin{cases} \dot{\lambda}_1 = \alpha_1\mu(S_r^{opt})\lambda_1 , & \lambda_1(T_{opt}) < 0 \\ \dot{\lambda}_2 = \mu(S_r^{opt})(\alpha_2\lambda_2 - \alpha_1\lambda_1) , & \lambda_2(T_{opt}) = 0 \end{cases}$$

One deduce immediately that $\lambda_1(t) < 0$ for any $t \geq 0$ and can consider the function

$$\gamma(t) = \frac{\alpha_2\lambda_2(t)}{\alpha_1\lambda_1(t)} \tag{10}$$

that fulfills $\dot{\gamma} = \mu(S_r^{opt})\left[(\alpha_2 - \alpha_1)\gamma - \alpha_2\right]$, $\gamma(T_{opt}) = 0$.

Notice that $\gamma = 0$ implies $\dot{\gamma} < 0$ and then one obtains $\gamma(t) > 0$ for any $t \in [0, T_{opt})$.

When $S_1 > S_2$, optimizing the Hamiltonian is equivalent to maximizing $\phi(S_1, S_2, \gamma, \cdot)$ (defined in (8)), and then Lemma 1 provides the uniqueness of S_r^{opt}. A straightforward calculus gives

$$\frac{d}{dt}\left(\frac{\gamma}{S_1 - S_2}\right) = \frac{\alpha_2 \mu(S_r^{opt})}{S_1 - S_2}\left[\gamma\left(1 - \frac{S_2 - S_r^{opt}}{S_1 - S_2}\right) - 1\right].$$

From $\gamma(T_{opt}) = 0$ we deduce the existence of $\tilde{t} \in [0, T_{opt})$ such that $\frac{d}{dt}\left(\frac{\gamma}{S_1 - S_2}\right) < 0$ for all $t \in [\tilde{t}, T_{opt}]$. Then, for ψ given by (9), one has

$$\dot{\psi} = \dot{S}_2\left(\mu''(S_2) - \frac{\gamma}{S_1 - S_2}\mu'(S_2)\right) - \frac{d}{dt}\left(\frac{\gamma}{S_1 - S_2}\right)\mu(S_2),$$

which is positive for $t \in [\tilde{t}, T_{opt}]$. Since $\psi > 0$ at T_{opt}, there exists $t_s \in [\tilde{t}, T_{opt})$ such that $\psi \geq 0$ for $t \geq t_s$. Defining $\bar{t} = \inf\{t_s \in [\tilde{t}, T_{opt}) : \psi \geq 0 \text{ for } t \in [t_s, T_{opt}]\}$, with Lemma 1, one concludes that the optimal S_r^{opt} is constant equal to $\underline{S}_2 = S_2(\bar{t})$ at any time $t \geq \bar{t}$.
When $\bar{t} > 0$, let us write $S_r^{opt} = uS_2$ with $u \in [0, 1]$. The left derivative $\dot{u}(\bar{t}^-)$ has to be positive and $\dot{S}_2(\bar{t}) = 0$. This implies to have $\dot{S}_r^{opt}(\bar{t}^-) > 0$. □

Proposition 5 *Under Assumption A1, for any initial condition in $\mathcal{D} \setminus \mathcal{T}$, the optimal trajectory is unique.*

Proof. We recall, from the proof of Proposition 4, that along any optimal trajectory, one has $S_1(t) > S_2(t)$ and $\gamma(t) > 0$ for any $t \in (0, T_f)$. Then, one has $\dot{S}_1 < 0$ and can re-parametrize the dynamics of variables S_2 and γ, defined in (10), in terms of S_1 instead of time t, and write the non-autonomous dynamics for optimal trajectories:

$$\begin{aligned} \frac{dS_2}{dS_1} &= \frac{\alpha_2}{\alpha_1}\frac{(S_r^{opt} - S_2)}{(S_2 - S_1)}, \qquad S_2(\underline{S}_l) = S_2(T_{opt}) \\ \frac{d\gamma}{dS_1} &= \frac{(\alpha_2 - \alpha_1)\gamma - \alpha_2}{\alpha_1(S_2 - S_1)}, \qquad \gamma(\underline{S}_l) = 0 \end{aligned} \tag{11}$$

where S_r^{opt} is the unique maximum of $\phi(S_1, S_2, \gamma, \cdot)$ on $[0, S_2]$. When $S_r^{opt} < S_2$ and $\gamma > 0$, one has

$$\frac{\partial \phi}{\partial S_r} = \gamma\left(\frac{S_2 - S_r^{opt}}{S_1 - S_2} - \frac{\mu(S_r^{opt})}{S_1 - S_2}\right) + \mu'(S_r^{opt}) = 0 \tag{12}$$

and hence $\dfrac{\partial^2 \phi}{\partial S_r \partial \gamma} = -\dfrac{\mu(S_r^{opt})}{\gamma} < 0$. Fix S_1, S_2 and consider S_r^{opt} as a function of γ. From (12), one has

$$\frac{\partial^2 \phi}{\partial S_r \partial \gamma} + \frac{\partial^2 \phi}{\partial S_r^2}\frac{\partial S_r^{opt}}{\partial \gamma} = 0$$

and from the strict concavity of $\phi(S_1, S_2, \gamma, \cdot)$, given by Lemma 1, one deduces $\frac{\partial S_r^{opt}}{\partial \gamma} \leq 0$.

The Jacobian matrix of system (11) is of the form

$$\begin{bmatrix} \star & \frac{\alpha_2}{\alpha_1(S_2 - S_1)}\frac{\partial S_r^{opt}}{\partial \gamma} \\ -\frac{((\alpha_2 - \alpha_1)\gamma - \alpha_2)}{\alpha_1(S_2 - S_1)^2} & \star \end{bmatrix}$$

from which one observes the non-negativity of off-diagonal terms, because $(\alpha_2 - \alpha_1)\gamma - \alpha_2 = \dot{\gamma}/\mu(S_r^{opt}) < 0$. So, the dynamics (11) is cooperative (in time S_1), and since $\gamma(\underline{S}_l) = 0$, one deduces that two solutions of (11) cannot cross in the (S_1, S_2) plane. Finally, one obtains the uniqueness of the optimal trajectory for a given initial condition in $\mathcal{D} \setminus \mathcal{T}$. □

Remark 2 *When $S_1(0) = S_2(0) = S_l$, from the expression of the Hamiltonian we obtain that the optimal control S_r^{opt} is such that at the beginning it maximizes $\mu(S_r)(S_l - S_r)$. Therefore, it is exactly the same as in the homogeneous case of Proposition 2. Measuring the initial rate of variation of S_2 gives an estimation of the parameter α_2 to fit the model, as one has*

$$\dot{S}_2(0) = \alpha_2 \mu(S_r^{opt})(S_2(0) - S_r^{opt}) \ .$$

If it is close to α, then the model with one compartment should suit.

For $S_1^0 > \underline{S}_l > S_2^0$, we define when $\alpha_1 \neq \alpha_2$:

$$f_0(S_1^0, S_2^0) = \frac{\alpha_2 \left(1 - \left(\frac{S_1^0 - S_2^0}{\underline{S}_l - S_2^0}\right)^{\frac{\alpha_1 - \alpha_2}{\alpha_1}}\right)}{(\alpha_2 - \alpha_1)(S_1^0 - S_2^0)}, \ \beta = \left(\frac{\alpha_1}{\alpha_2}\right)^{\frac{\alpha_1}{\alpha_1 - \alpha_2}}$$

and when $\alpha_1 = \alpha_2$: $f_0(S_1^0, S_2^0) = \dfrac{\ln\left(\frac{S_1^0 - S_2^0}{\underline{S}_l - S_2^0}\right)}{(S_1^0 - S_2^0)}$, $\beta = e$.

Proposition 6 *The set $\mathcal{I}$, where a constant control is optimal, is given by*

$$\mathcal{I} = \{(S_1^0, S_2^0) \in (\underline{S}_l, +\infty) \times (0, \underline{S}_l) \ s.t. \ S_2^0 \leq \bar{S}_2 \ \ or \ \mu(S_2^0) f_0(S_1^0, S_2^0) \leq \mu'(S_2^0) \}$$

where $\bar{S}_2$ is the unique solution in $(0, \underline{S}_l)$ of

$$\mu(\bar{S}_2) = \beta \mu'(\bar{S}_2)(\underline{S}_l - \bar{S}_2) \ . \tag{13}$$

Proof. With control $Q = V_r \mu(S_2^0)$, $S_2(\cdot)$ is equal to S_2^0 and solution $S_1(\cdot)$ can be made explicit. Then, time T_f such that $S_1(T_f) = \underline{S}_l$, and solution $\gamma(\cdot)$ such that $\gamma(T_f) = 0$ can be also made explicit. Let $f(t) = \gamma(t)/(S_1(t) - S_2^0)$. According to Lemma 1, this constant strategy is optimal exactly when

$$\mu'(S_2^0) \geq \mu(S_2^0) f(t) \ , \quad t \in [0, T_f] \ . \tag{14}$$

One can easily check that $\dot{f} = \alpha_2 \mu(S_2^0)(\gamma - 1)/(S_1 - S_2^0)$, and consequently, $\dot{f}$ cannot be null more than one time (recall from the proof of Proposition 4 that γ is non-increasing). One has also $f(0) > 0$, $f(T_f) = 0$, and $f'(T_f) \leq 0$.

If $f'(0) \leq 0$, then condition (14) is equivalent to have (S_1^0, S_2^0) below the graph of the curve $\mathcal{C}$ defined by $\mu(S_2^0) f_0(S_1^0, S_2^0) = \mu'(S_2^0)$. A straightforward but lengthy computation gives $f(0) = f_0(S_1^0, S_2^0))$. One can also check that $f'(0) \leq 0$ is equivalent to have (S_1^0, S_2^0) below the line $\mathcal{L}$ defined by $S_1^0 - S_2^0 = \beta(\underline{S}_l - S_2^0)$. The intersection point $(\bar{S}_1, \bar{S}_2)$ of $\mathcal{C}$ and $\mathcal{L}$ is given by $\bar{S}_2$ solution of (13), its uniqueness being guaranteed by the concavity of μ. One can easily check that $\mathcal{C}$ is below $\mathcal{L}$ for any $S_2 \in [\bar{S}_2, \underline{S}_l]$.
If $f'(0) \geq 0$, on can check that $\max_t f(t) = 1/\beta(\underline{S}_l - S_2^0)$ and then condition (14) is equivalent to have $S_2^0 \leq \overline{S}_2$. Moreover, the straight line $S_2 = \overline{S}_2$ is below the graph of the curve $\mathcal{C}$ in the interval $[\underline{S}_l, \overline{S}_1]$ (see Figure 4). □

For the Monod law, one can find

$$\overline{S}_2 = \frac{1}{2}\left(-K(1+\beta) + \sqrt{K^2(1+\beta)^2 + 4K\beta\underline{S}_l}\right) \ .$$

4 Discussion and numerical simulations

The benefits of our theoretical analysis is to identify efficient pumping strategies and some of their robustness properties. We summarize those contributions in terms of the following rules for the decision makers:

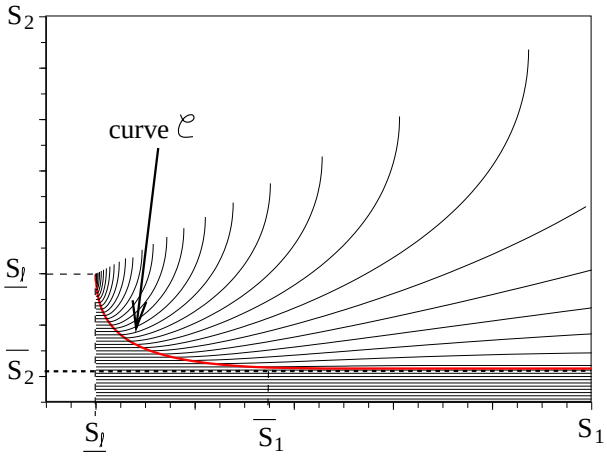

Figure 4: Backward integration of the extremals.

1. The profit of using the optimal feedback strategy compared to the best constant one, can be easily determined numerically (see the simulations below). As expected, the more the resource is initially polluted, the more the improvement of the feedback policy is significant. Depending on the ratio "initial pollution over desired maximal pollution level", the decision maker can then decide whether it worth adopting a time-varying strategy.
2. A spatial inhomogeneity of the pollution concentration improves the treatment time on the condition that the resource is enough polluted. Moreover, applying the best constant strategy as if the resource was perfectly homogeneous is robust with respect to uncertainty on the inhomogeneity parameter in the sense that it provides a guaranteed time (see Remark 1).
3. Measuring the initial speed of variation of concentration at two remote locations in the resource allows to identify the inhomogeneity parameter of the model (see Remark 2). Then, the decision maker can decide if it worth considering a feedback strategy with two measurement points instead of one.
4. The optimal feedback strategy for the inhomogeneous case consists in applying a constant flow rate when the concentration S_2 reaches a prescribed value given by Proposition 6. The concentration S_2 is then maintained constant, without having to measure the concentration S_1 (see Figure 4).

Simulations have been conducted for the Monod law with $\mu_{\max} = 1\,s^{-1}$, $K = 1\,mol.m^{-3}$, and volumes $V = 1000\,m^3$, $V_r = 1\,m^3$. The initial concentration of pollutant has been chosen equal to $1\,mol.m^{-3}$ uniformly. Figure 5 shows the comparison of minimal times for different values of $\underline{S}_l$ (the curves corresponds to different values of the parameter p).

On this example, one can see that for $\underline{S}_l = 0.01$, the minimal time among constant controls is about twice larger than among feedbacks. The influence of inhomogeneity is also quite significant.
The optimal feedback (6) for the homogeneous case is a simple law that provides a decreasing flow rate Q w.r.t. time (cf. Proposition 2), contrary to the inhomogeneous case for which it is non-monotonic (cf. Proposition 4). In Figure 6, we compare the optimal policy $Q^{opt}(\cdot)$ for $p = 0.4$ and $\underline{S}_l = 0.1$ with $Q_1(\cdot)$, resp. $Q_2(\cdot)$ applying the formula (6) on measurement S_1, resp. S_2.

The true optimal feedback control, in the model that consider both measurements, is more sophisticated in the sense that it anticipates the approach to the target, increasing the flow rate and freezing it.
The study has been made assuming that the steady-state characteristics $Q \mapsto S_r(Q)$ of the bioreactor is perfectly known. Uncertainty on this map as well as on measurements will be the matter of a forthcoming work.

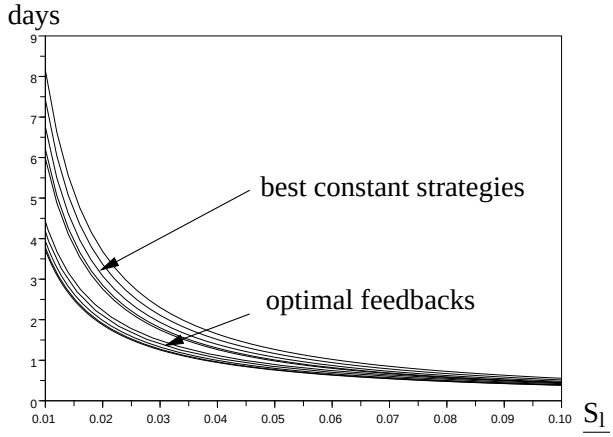

Figure 5: Comparison of optimal times.

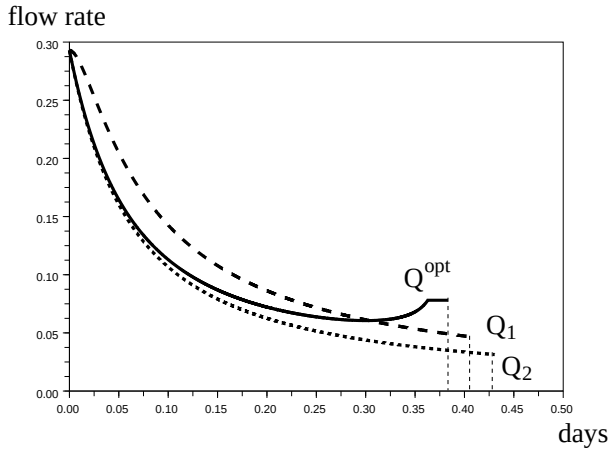

Figure 6: Optimal and sub-optimal policies.

Acknowledgment

This research was developed in the context of DYMECOS INRIA associated team, being partially supported by INRIA-CONICYT French-Chilean cooperation program and MOMARE SticAmsud project . The first and third author thank the support of FONDECYT projects 1080173 and 1070297, and Fondo Basal, Centro de Modelamiento Matematico - U. de Chile.

References

[1] E. Abulesz and G. Lyberatos. Periodic optimization of continuous microbial growth processes. *Biotechnol. and Bioeng.*, 29:1059–1065, 1987.

[2] J. Alford. Bioprocess control: Advances and challenges. *Computers and Chemical Engineering*, 30:1464–1475, 2006.

[3] J. Banga, E. Balsa-Canto, C. Moles, and A. Alonso. Dynamic optimization of bioreactors: a review. *Proceedings of the Indian Academy of Sciences*, 69:257–265, 2003.

[4] G. Bastin, D. Nesic, Y. Tan, and I. Mareels. On extremum seeking in bioprocesses with multivalued cost functions. *Biotechnology Progress*, 25(3):683–689, 2009.

[5] G. D'Ans, D. Gottlieb, and P. Kokotovic. Optimal control of bacterial growth. *Automatica*, 8:729–736, 1972.

[6] V. Estrada, E.R. Parodi, and M. S. Diaz. Addressing the control problem of algae growth in water reservoirs with advanced dynamic optimization approaches. *Computers and Chemical Engineering*, 33:2063–2074, 2009.

[7] P. Gajardo, H. Ramírez, and A. Rapaport. Minimal time sequential batch reactors with bounded and impulse controls for one or more species. *SIAM Journal on Control and Optimization*, 47(6):2827–2856, 2008.

[8] R.D. Gulati and E. van Donk. Lakes in the netherlands, their origin, eutrophication and restoration: state of the art reviews. *Hydrobiologia*, 478:73–106, 2002.

[9] J. Hong. Optimal substrate feeding policy for fed batch fermentation with substrate and product inhibition kinetics. *Biotechnol. Bioengng.*, 28:1421–1431, 1986.

[10] J. Van Impe and G. Bastin. *Optimal adaptive control of biotechnological processes*, pages 401–436. Kluwer Academic Publishers, 1998.

[11] R.L. Irvine and L.H. Ketchum. Sequencing batch reactors for biological wastewater treatment. *Critical Rev. Environ. Control*, 18:255–294, 1989.

[12] A. Johnson. The control of fed-batch fermentation processes: a survey. *Automatica*, 23(6):691–705, 1987.

[13] P. Kittisupakorn and M. Hussain. Comparison of optimisation based control techniques for the control of a cstr. *International Journal of Computer Applications in Technology*, 13(3–5):178–184, 2000.

[14] Z. Kurtanjek. Optimal nonsingular control of fed-batch fermentation. *Biotechnology and Bioengineering*, 37:814–823, 1991.

[15] H.C. Lim, Y.J. Tayeb, J.M. Modak, and P. Bonte. Computational algorithms for optimal feed rates for a class of fed-batch fermentation: numerical results for penicillin and cell production. *Biotechnology and Bioengineering*, 28(9):1408–1420, 1986.

[16] N. Marcos, M. Guay, D. Dochain, and T. Zhang. Adaptive extremum seeking control of a continuous stirred tank bioreactor with haldane's kinetics. *Journal of Process Control*, 14:317–328, 2004.

[17] D. Mazouni, J. Harmand, A. Rapaport, and H. Hammouri. Optimal time switching control for multi-reaction batch process. *Optimal Control Applications and Methods*, in press.

[18] J. Moreno. Optimal time control of bioreactors for the wastewater treatment. *Optimal Control Appl. Methods*, 20(3):145–164, 1999.

[19] K. Rani and V. Rao. Control of fermenters: a review. *Bioprocess Engineering*, 21:77–88, 1999.

[20] L. Ruan and X. Chen. Comparison of several periodic oscillations of a continuous fermentation process. *Biotechnol. Progr.*, 12:1059–1065, 1996.

[21] S. Shioya. *Optimization and control in fed-batch bioreactors*, pages 111–142. Advances in Biochemical Engineering & Biotechnology, Ed. J. Van Impe, P. Vanrolleghem and D. Iserentant. Springer Berlin, Heidelberg, 1992.

[22] I. Smets, J. Claes, E. November, G. Bastin, and J. Van Impe. Optimal adaptive control of (bio)chemical reactors: past, present and future. *Journal of Process Control*, 14:795–805, 2004.

[23] I. Smets and I. Van Impe. Optimal control of (bio-)chemical reactors: generic properties of time and space dependent optimization. *Mathematics and Computers in Simulation*, 60(6):475–486, 2002.

[24] H. . Smith and P. Waltman. *The theory of the chemostat*, volume 13 of *Cambridge Studies in Mathematical Biology*. Cambridge University Press, Cambridge, 1995. Dynamics of microbial competition.

[25] M. Sondergaard, E. Jeppesen, T.L. Lauridsen, C. Skov, E.H. van Nes, R. Roijackers, E. Lammens, and R. Portielje. Lake restoration: successes, failures and long term effects. *Journal of Applied Ecology*, 44:1095–1105, 2007.

[26] A. Soukkou, A. Khellaf, S. Leulmi, and K. Boudeghdegh. Optimal control of a cstr process. *Braz. J. Chem. Eng*, 25(4):799–812, 2008.

[27] D. Spitzer. Maximization of steady-state bacterial production in a chemostat with ph and substrate control. *Biotechnology and Bioengineering*, 18(2):167–178, 2004.

[28] B. Srinivasan, S. Palanki, and D. Bonvin. Dynamic Optimization of Batch Processes: I. characterization of the Nominal Solution. *Comput. Chem. Engng.*, 27(1):1–26, 2003.

[29] R.G. Tsoneva, T.D. Patarinska, and I.P. Popchev. Augmented lagrange decomposition method for optimal control calculation of batch fermentation processes. *Bioprocess and Biosystems Engineering*, 18(2):143–153, 1998.

[30] H. Wang, M. Krstic, and G. Bastin. Optimizing bioreactors by extremum seeking. *International Journal of Adaptive Control and Signal Processing*, 13:651–669, 1999.

[31] T. Zhang, M. Guay, and D. Dochain. Adaptive extremum seeking control of continuous stirred-tank bioreactors. *AIChE Journal*, 49(1):113–123, 2003.