HAL
open science

Wigner Chaos and the Fourth Moment

Todd Kemp, Ivan Nourdin, Giovanni Peccati, Roland Speicher

To cite this version:

Todd Kemp, Ivan Nourdin, Giovanni Peccati, Roland Speicher. Wigner Chaos and the Fourth Moment. Annals of Probability, 2012, 10.1214/11-AOP657 . hal-00519607

HAL Id: hal-00519607

https://hal.science/hal-00519607v1

Submitted on 20 Sep 2010

HAL is a multi-disciplinary open access archive for the deposit and dissemination of scientific research documents, whether they are published or not. The documents may come from teaching and research institutions in France or abroad, or from public or private research centers.

L'archive ouverte pluridisciplinaire **HAL**, est destinée au dépôt et à la diffusion de documents scientifiques de niveau recherche, publiés ou non, émanant des établissements d'enseignement et de recherche français ou étrangers, des laboratoires publics ou privés.

WIGNER CHAOS AND THE FOURTH MOMENT

TODD KEMP[(1)], IVAN NOURDIN[(2)], GIOVANNI PECCATI[(3)], AND ROLAND SPEICHER[(4)]

ABSTRACT. We prove that a normalized sequence of multiple Wigner integrals (in a fixed order of free Wigner chaos) converges in law to the standard semicircular distribution if and only if the corresponding sequence of fourth moments converges to 2, the fourth moment of the semicircular law. This extends to the free probabilistic setting some recent results by Nualart and Peccati on characterizations of Central Limit Theorems in a fixed order of Gaussian Wiener chaos. Our proof is combinatorial, analyzing the relevant non-crossing partitions that control the moments of the integrals. We can also use these techniques to distinguish the first order of chaos from all others in terms of distributions; we then use tools from the free Malliavin calculus to give quantitative bounds on a distance between different orders of chaos. When applied to highly symmetric kernels, our results yield a new transfer principle, connecting Central Limit Theorems in free Wigner chaos to those in Gaussian Wiener chaos. We use this to prove a new free version of an important classical theorem: the Breuer-Major theorem.

1. INTRODUCTION AND BACKGROUND

Let $(W_t)_{t\geq 0}$ be a standard one-dimensional Brownian motion, and fix an integer $n \geq 1$. For every deterministic (Lebesgue) square-integrable function f on $\mathbb{R}_+^n$, we denote by $I_n^W(f)$ the nth (multiple) Wiener-Itô stochastic integral of f with respect to W (see e.g. [16, 18, 26, 30] for definitions; here and in the sequel $\mathbb{R}_+$ refers to the non-negative half-line $[0,\infty)$.) Random variables such as $I_n^W(f)$ play a fundamental role in modern stochastic analysis, the key fact being that every square-integrable functional of W can be uniquely written as an infinite orthogonal sum of symmetric Wiener-Itô integrals of increasing orders. This feature, known as the *Wiener-Itô chaos decomposition*, yields an explicit representation of the isomorphism between the space of square-integrable functionals of W and the symmetric Fock space associated with $L^2(\mathbb{R}_+)$. In particular, the Wiener chaos is the starting point of the powerful *Malliavin calculus of variations* and its many applications in theoretical and applied probability (see again [16, 26] for an introduction to these topics). We recall that the collection of all random variables of the type $I_n^W(f)$, where n is a fixed integer, is customarily called the nth *Wiener chaos* associated with W. Note that the first Wiener chaos is just the Gaussian space spanned by W.

The following result, proved in [28], yields a very surprising condition under which a sequence $I_n^W(f_k)$ converges in distribution, as $k \to \infty$, to a Gaussian random variable. (In this statement, we assume as given an underlying probability space $(X, \mathcal{F}, \mathbb{P})$, with the symbol $\mathbb{E}$ denoting expectation with respect to $\mathbb{P}$.)

Theorem 1.1 (Nualart, Peccati). *Let $n \geq 2$ be an integer, and let $(f_k)_{k\in\mathbb{N}}$ be a sequence of symmetric functions (cf. Definition 1.19 below) in $L^2(\mathbb{R}_+^n)$, each with $n!\|f_k\|_{L^2(\mathbb{R}_+^n)} = 1$. The following statements are equivalent.*

(1) *The fourth moment of the stochastic integrals $I_n^W(f_k)$ converge to 3:*

$$\lim_{k\to\infty} \mathbb{E}(I_n^W(f_k)^4) = 3.$$

(2) *The random variables $I_n^W(f_k)$ converge in distribution to the standard normal law $N(0,1)$.*

(1) Supported in part by the NSF Grants DMS-0701162 and DMS-1001894.
(2) Supported in part by the (French) ANR grant "Exploration des Chemins Rugueux".
(4) Supported in part by a Discovery Grant from NSERC.

Note that the Wiener chaos of order $n \geq 2$ does not contain any Gaussian random variables, cf. [16, Chapter 6]. Since the fourth moment of the normal $N(0,1)$ distribution is equal to 3, this Central Limit Theorem shows that, within a fixed order of chaos and as far as normal approximations are concerned, second and fourth moments alone control all higher moments of distributions.

Remark 1.2. The Wiener isometry shows that the second moment of $I_n^W(f)$ is equal to $n!\|f\|_{L^2}^2$, and so Theorem 1.1 could be stated intrinsically in terms of random variables in a fixed order of Wiener chaos. Moreover, it could be stated with the *a priori* weaker assumption that $\mathbb{E}(I_n^W(f_k)^2) \to \sigma^2$ for some $\sigma > 0$, with the results then involving $N(0,\sigma^2)$ and fourth moment $3\sigma^4$ respectively. We choose to rescale to variance 1 throughout most of this paper.

Theorem 1.1 represents a drastic simplification of the so-called "method of moments and cumulants" for normal approximations on a Gaussian space, as described in e.g. [19, 33]; for a detailed in-depth treatement of these techniques in the arena of Wiener chaos, see the forthcoming book [30]. We refer the reader to the survey [22] and the forthcoming monograph [23] for an introduction to several applications of Theorem 1.1 and its many ramifications, including power variations of stochastic processes, limit theorems in homogeneous spaces, random matrices and polymer fluctuations. See in particular [21, 25, 27] for approaches to Theorem 1.1 based respectively on Malliavin calculus and Stein's method, as well as applications to universality results for non-linear statistics of independent random variables.

In the recent two decades, a new probability theory known as *free probability* has gained momentum due to its extremely powerful contributions both to its birth subject of operator algebras and to random matrix theory; see, for example, [1, 15, 20, 40]. Free probability theory offers a new kind of independence between random variables, *free independence*, that is modeled on the free product of groups rather than tensor products; it turns out to succinctly describe the relationship between eigenvalues of large random matrices with independent entries. In free probability, the central limit distribution is the Wigner semicircular law (cf. Equation 1.4), further demonstrating the link to random matrices. *Free Brownian motion*, discussed in Section 1.2 below, is a (non-commutative) stochastic process whose increments are freely independent and have semicircular distributions. Essentially, one should think of free Brownian motion as Hermitian random matrix-valued Brownian motion in the limit as matrix dimension tends to infinity; see, for example, [7] for a detailed analysis of the related large deviations.

If $(S_t)_{t\geq 0}$ is a free Brownian motion, the construction of the Wiener-Itô integral can be mimicked to construct the so-called *Wigner stochastic integral* (cf. Section 1.3) $I_n^S(f)$ of a deterministic function $f \in L^2(\mathbb{R}_+^n)$. The non-commutativity of S_t gives I_n^S different properties; in particular, it is no longer sufficient to restrict to the class of symmetric f. Nevertheless, there is an analogous theory of *Wigner chaos* detailed in [8], including many of the powerful tools of Malliavin calculus in free form. The main theorem of the present paper is the following precise analogue of the Central Limit Theorem 1.1 in the free context.

Theorem 1.3. *Let $n \geq 2$ be an integer, and let $(f_k)_{k\in\mathbb{N}}$ be a sequence of mirror symmetric functions (cf. Definition 1.19) in $L^2(\mathbb{R}_+^n)$, each with $\|f_k\|_{L^2(\mathbb{R}_+^n)} = 1$. The following statements are equivalent.*

(1) *The fourth moments of the Wigner stochastic integrals $I_n^S(f_k)$ converge to 2:*

$$\lim_{k\to\infty} \mathbb{E}(I_n^S(f_k)^4) = 2.$$

(2) *The random variables $I_n^S(f_k)$ converge in law to the standard semicircular distribution $S(0,1)$ (cf. Equation 1.4) as $k \to \infty$.*

Remark 1.4. The expectation $\mathbb{E}$ in Theorem 1.3(1) must be properly interpreted in the free context; in Section 1.1 we will discuss the right framework (of a trace $\mathbb{E} = \varphi$ on the von Neumann algebra generated by the free Brownian motion). We will also make it clear what is meant by the law of a non-commutative random variable like $I_n^S(f_k)$.

Remark 1.5. Since the fourth moment of the standard semicircular distribution is 2, (2) clearly implies (1) in Theorem 1.3; the main thrust of this paper is the remarkable reverse implication. The mirror symmetry condition on f is there merely to guarantee that the stochastic integral $I_n^S(f)$ is indeed a self-adjoint operator; otherwise, it has no law to speak of (cf. Section 1.1).

Our proof of Theorem 1.3 is through the method of moments which, in the context of the Wigner chaos, is elegantly formulated in terms of *non-crossing* pairings and partitions. While, on some level, the combinatorics of partitions can be seen to be involved in any central limit theorem, our present proof is markedly different from the form of the proofs given in [25, 27, 28]. All relevant technology is discussed in Sections 1.1–1.4 below; further details on the method of moments in free probability theory can be found in the book [20].

As a key step towards proving Theorem 1.3, but of independent interest and also completely analogous to the classical case, we prove the following characterization of the fourth moment condition in terms of standard integral contraction operators on the kernels of the stochastic integrals (as discussed at length in Section 1.3 below).

Theorem 1.6. *Let n be a natural number, and let $(f_k)_{k\in\mathbb{N}}$ be a sequence of functions in $L^2(\mathbb{R}_+^n)$, each with $\|f_k\|_{L^2(\mathbb{R}_+^n)} = 1$. The following statements are equivalent.*

(1) *The fourth absolute moments of the stochastic integrals $I_n^S(f_k)$ converge to 2:*

$$\lim_{k\to\infty} \mathbb{E}(|I_n^S(f_k)|^4) = 2.$$

(2) *All non-trivial contractions (cf. Definition 1.21) of f_k converge to 0: for each $p = 1, 2, \ldots, n-1$,*

$$\lim_{k\to\infty} f_k \overset{p}{\frown} f_k^* = 0 \quad \textit{in} \quad L^2(\mathbb{R}_+^{2n-2p}).$$

While different orders of Wiener chaos have disjoint classes of laws, it is (at the present time) unknown if the same holds for the Wigner chaos. As a first result in this direction, the following important corollary to Theorem 1.6 allows us to distinguish the laws of Wigner integrals in the first order of chaos from all higher orders.

Corollary 1.7. *Let $n \geq 2$ be an integer, and consider a non-zero mirror symmetric function $f \in L^2(\mathbb{R}_+^n)$. Then the Wigner integral $I_n^S(f)$ satisfies $\mathbb{E}[I_n^S(f)^4] > 2\mathbb{E}[I_n^S(f)^2]^2$. In particular, the distribution of the Wigner integral $I_n^S(f)$ cannot be semicircular.*

Combining these results with those in [21, 25, 27, 28], we can state the following *Wiener-Wigner transfer principle* for translating results between the classical and free chaoses.

Theorem 1.8. *Let $n \geq 2$ be an integer, and let $(f_k)_{k\in\mathbb{N}}$ be a sequence of fully symmetric (cf. Definition 1.19) functions in $L^2(\mathbb{R}_+^n)$. Let $\sigma > 0$ be a finite constant. Then, as $k \to \infty$,*

(1) $\mathbb{E}\left[I_n^W(f_k)^2\right] \to n!\sigma^2$ *if and only if* $\mathbb{E}\left[I_n^S(f_k)^2\right] \to \sigma^2$.

(2) *If the asymptotic relations in (1) are verified, then $I_n^W(f_k)$ converges in law to a normal random variable $N(0, n!\sigma^2)$ if and only if $I_n^S(f_k)$ converges in law to a semicircular random variable $S(0, \sigma^2)$.*

Theorem 1.8 will be shown by combining Theorems 1.3 and 1.6 with the findings of [28]; the transfer principle allows us to easily prove yet unknown free versions of important classical results, such as the Breuer-Major theorem (Corollary 2.3 below).

Remark 1.9. It is important to note that the transfer principle Theorem 1.8 requires the strong assumption that the kernels f_k are *fully symmetric* in both the classical and free cases. While this is no loss of generality in the Wiener chaos, it applies to only a small subspace of the Wigner chaos of orders 3 or higher.

Corollary 1.7 shows that the semicircular law is not the law of any stochastic integral of order higher than 1. We are also able to prove some sharp quantitative estimates for the distance to the semicircular law. The key estimate, using Malliavin calculus, is as follows; it is a free probabilistic analogue of [21, Theorem 3.1]. We state it here in less generality than we prove it in Section 4.1.

Theorem 1.10. *Let S be a standard semicircular random variable (cf. Equation 1.4). Let F have a finite Wigner chaos expansion (i.e. $F = \sum_{n=1}^{N} I_n^S(f_n)$ for some mirror symmetric functions $f_n \in L^2(\mathbb{R}_+^n)$ and some finite N). Let $\mathcal{C}_2$ and $\mathscr{I}_2$ be as in Definition 3.16. Then*

$$d_{\mathcal{C}_2}(F,S) \equiv \sup_{\substack{h\in\mathcal{C}_2\\ \mathscr{I}_2(h)\le 1}} |\mathbb{E}[h(F)] - \mathbb{E}[h(S)]| \le \frac{1}{2}\mathbb{E}\otimes\mathbb{E}\left(\left|\int_0^\infty \nabla_t(N_0^{-1}F)\,\sharp\,(\nabla_t F)^*\,dt - 1\otimes 1\right|\right). \quad (1.1)$$

The Malliavin calculus operators ∇ and N_0 and the product $\sharp$ on tensor-product-valued *biprocesses* are defined below in Section 3, where we also describe all the relevant structure, including why the free Cameron-Gross-Malliavin derivative $\nabla_t F$ of a random variable F takes values in the tensor product $L^2(\mathbb{R}_+)\otimes L^2(\mathbb{R}_+)$. The class $\mathcal{C}_2$ is somewhat smaller than the space of Lipschitz functions, and so the metric $d_{\mathcal{C}_2}$ on the left-hand-side of Equation 4.1 is, a priori, weaker than the Wasserstein metric. This distance does metrize convergence in law, however.

Remark 1.11. The key element in the proof of Theorem 1.10 is to measure the distance between F and S by means of a procedure close to the so-called *smart path method*, as popular in Spin Glasses (cf. [35]). In this technique, one assumes that F and S are independent, and then assesses the distance between their laws by controlling the variations of the mapping $t \mapsto \mathbb{E}[h(\sqrt{1-t}F + \sqrt{t}S)]$ (where h is a suitable test function) over the interval $[0,1]$. As shown below, our approach to the smart path method requires that we replace $\sqrt{t}S$ by a free Brownian motion S_t (cf. Section 1.2) *freely independent* from F, so that we can use the free stochastic calculus to proceed with our estimates.

Using Theorem 1.10, we can prove the following sharp quantitative bound for the distance from any double Wigner integral to the semicircular law.

Corollary 1.12. *Let $f \in L^2(\mathbb{R}_+^2)$ be mirror-symmetric and normalized $\|f\|_{L^2(\mathbb{R}_+^n)} = 1$, let S be a standard semicircular random variable, and let $d_{\mathcal{C}_2}$ be defined as in Equation 1.1. Then*

$$d_{\mathcal{C}_2}(I_2^S(f), S) \le \frac{1}{2}\sqrt{\frac{3}{2}}\sqrt{\mathbb{E}[I_2^S(f)^4] - 2}. \quad (1.2)$$

In principle, Equation 1.1 could be used to give quantitative estimates like Equation 1.2 for any order of Wigner chaos. However, the analogous techniques from the classical literature heavily rely on the full symmetry of the function f; in the more general mirror symmetric case required in the Wigner chaos, such estimates are, thus far, beyond our reach.

The remainder of this paper is organized as follows. Sections 1.1 through 1.4 give (concise) background and notation for the free probabilistic setting, free Brownian motion and its associated stochastic integral the Wigner integral, and the relevant class of partitions (non-crossing pairings) that control moments of these integrals. Section 2 is devoted to the proofs of Theorems 1.3 and 1.6 along with Corollary 1.7 and Theorem 1.8. In Section 3, we collect and summarize all of the tools of free stochastic calculus and free Malliavin calculus needed to prove the quantitative results of Section 4; this final section is devoted to the proofs of Theorem 1.10 (in Section 4.1) and Corollary 1.12 (in Section 4.2), along with an abstract list of equivalent forms of our central limit theorem in the second Wigner chaos. Finally, Appendix A contains the proof of Theorem 3.20, an important technical approximation tool needed for the proof of Theorem 1.10 but also of independent interest.

1.1. **Free probability.** A *non-commutative probability space* is a complex linear algebra $\mathscr{A}$ equipped with an involution (like the adjoint operation $X \mapsto X^*$ on matrices) and a unital linear functional $\varphi\colon \mathscr{A} \to \mathbb{C}$. The standard classical example is $\mathscr{A} = L^\infty(\Omega, \mathcal{F}, \mathbb{P})$ where $\mathcal{F}$ is a σ-field of subset of Ω and $\mathbb{P}$ is a probability measure on $\mathcal{F}$; in this case the involution is complex conjugation and φ is expectation with respect to $\mathbb{P}$. One can identify $\mathcal{F}$ from $\mathscr{A}$ through the idempotent elements which are the indicator functions $\mathbb{1}_E$ of events $E \in \mathcal{F}$, and so this terminology for a probability space contains the same information as the usual one. Another relevant example that is actually non-commutative is given by *random matrices*; here $\mathscr{A} = L^\infty(\Omega, \mathcal{F}, \mathbb{P}\,;\, M_d(\mathbb{C}))$, $d\times d$-matrix-valued

random variables, where the involution is matrix adjoint and the natural linear functional φ is given by $\varphi(X) = \frac{1}{d}\mathbb{E}\mathrm{Tr}(X)$. Both of these examples only deal with bounded random variables, although this can be extended to random variables with finite moments without too much effort.

The pair $(L^\infty(\Omega, \mathcal{F}, \mathbb{P}), \mathbb{E})$ has a lot of analytic structure not present in many non-commutative probability spaces; we will need these analytic tools in much of the following work. We assume that $\mathscr{A}$ is a von Neumann algebra – an algebra of operators on a (separable) Hilbert space, closed under adjoint and weak convergence. Moreover, we assume that the linear functional φ is weakly continuous, positive (meaning $\varphi(X) \geq 0$ whenever X is a non-negative element of $\mathscr{A}$; i.e. whenever $X = YY^*$ for some $Y \in \mathscr{A}$), faithful (meaning that if $\varphi(YY^*) = 0$ then $Y = 0$), and tracial, meaning that $\varphi(XY) = \varphi(YX)$ for all $X, Y \in \mathscr{A}$, even though in general $XY \neq YX$. Such a φ is called a *trace* or *tracial state*. Both of the above examples (bounded random variables and bounded random matrices) satisfy these conditions. A von Neumann algebra equipped with a tracial state is typically called a *(tracial) W^*-probability space*. Some of the theorems in this paper require the extra structure of a W^*-probability space, while others hold in a general abstract non-commutative probability space. To be safe, we generally assume the W^*-setting in what follows. Though we do not explicitly specify traciality in the proceeding, we will always assume φ is a trace.

In a W^*-probability space, we refer to the self-adjoint elements of the algebra as *random variables*. Any random variable has a *law* or *distribution* defined as follows: the law of $X \in \mathscr{A}$ is the unique Borel probability measure μ_X on $\mathbb{R}$ with the same moments as X; that is, such that

$$\int_{\mathbb{R}} t^n \mu_X(dt) = \varphi(X^n), \quad n = 0, 1, \ldots$$

The existence and uniqueness of μ_X follow from the positivity of φ; see [20, Propositions 3.13]. Thus, in general non-commutative probability, the method of moments and cumulants plays a central role.

In this general setting, the notion of *independence* of events is harder to pin down. Voiculescu introduced a general non-commutative notion of independence in [36] which has, of late, been very important both in operator algebras and in random matrix theory. Let $\mathscr{A}_1, \ldots, \mathscr{A}_n$ be unital subalgebras of $\mathscr{A}$. Let $X_1, \ldots, X_m$ be elements chosen from among the $\mathscr{A}_i$s such that, for $1 \leq j < m$, X_j and X_{j+1} do not come from the same $\mathscr{A}_i$, and such that $\varphi(X_j) = 0$ for each j. The subalgebras $\mathscr{A}_1, \ldots, \mathscr{A}_n$ are said to be *free* or *freely independent* if, in this circumstance, $\varphi(X_1 X_2 \cdots X_n) = 0$. Random variables are called freely independent if the unital algebras they generate are freely independent. By centering moments it is easy to check that, in the case that all the indices are distinct, this is the same as classical independence expressed in terms of moments. For example, if X, Y are freely independent they satisfy $\varphi\left[(X^n - \varphi(X^n))(Y^m - \varphi(Y^m))\right] = 0$, which reduces to $\varphi(X^n Y^m) = \varphi(X^n)\varphi(Y^m)$. But if there are repetitions of indices among the (generally non-commutative) random variables, freeness is much more complicated than classical independence; for example, if X, Y are free then $\varphi(XYXY) = \varphi(X^2)\varphi(Y)^2 + \varphi(X)^2\varphi(Y^2) - \varphi(X)^2\varphi(Y)^2$. Nevertheless, if X, Y are freely independent, then their joint moments are determined by the moments of X and Y separately. Indeed, the law of the random variable $X + Y$ is determined by (and can be calculated using the Stieltjes transforms of) the laws of X and Y separately. It was later discovered by Voiculescu [37] and others that pairs of random matrices with independent entries are (asymptotically) freely independent in terms of expected trace; this has led to powerful new tools for analyzing the density of eigenvalues of random matrices.

The notion of *conditioning* is also available in free probability.

Definition 1.13. *Let $(\mathscr{A}, \varphi)$ be a W^*-probability space and let $\mathscr{B} \subseteq \mathscr{A}$ be a unital W^*-subalgebra. There is a* **conditional expectation** *map $\varphi[\,\cdot\,|\mathscr{B}]$ from $\mathscr{A}$ onto $\mathscr{B}$. It is characterized by the property*

$$\varphi[XY] = \varphi\left[X\varphi[Y|\mathscr{B}]\right], \qquad \text{for all } X \in \mathscr{B},\ Y \in \mathscr{A}. \tag{1.3}$$

Conditional expectation has the following properties.

(1) *$\varphi[\,\cdot\,|\mathscr{B}]$ is weakly continuous and completely positive.*
(2) *$\varphi[\,\cdot\,|\mathscr{B}]$ is a contraction (in operator norm) and preserves the identity.*
(3) *If $Y \in \mathscr{A}$ and $X, Z \in \mathscr{B}$ then $\varphi[XYZ|\mathscr{B}] = X\varphi[Y|\mathscr{B}]Z$.*

If $X \in \mathscr{A}$, then we denote by $\varphi[\,\cdot\,|X]$ the conditional expectation onto the unital von Neumann subalgebra of $\mathscr{A}$ generated by X.

Such conditional expectations were introduced in [34] (where properties (1)–(3) were proved). As one should expect, if X and Y are free then $\varphi[Y|X] = \varphi(Y)$, as in the classical case. Many analogues of classical probabilistic constructions (such as martingales) are well-defined in free probability, using Definition 1.13. See, for example, [6] for a discussion of *free Lévy processes*.

1.2. **Free Brownian Motion.** The (centred) *semicirclular distribution* (or Wigner law) $S(0,t)$ is the probability distribution

$$S(0,t)(dx) = \frac{1}{2\pi t}\sqrt{4t - x^2}\,dx, \quad |x| \le 2\sqrt{t}. \tag{1.4}$$

Since this distribution is symmetric about 0, its odd moments are all 0. Simple calculation shows that the even moments are given by (scaled) *Catalan numbers*: for non-negative integers m,

$$\int_{-2\sqrt{t}}^{2\sqrt{t}} x^{2m} S(0,t)(dx) = C_m t^m,$$

where $C_m = \frac{1}{m+1}\binom{2m}{m}$. In particular, the second moment (and variance) is t while the fourth moment is $2t^2$.

A *free Brownian motion* $S = (S_t)_{t\ge 0}$ is a non-commutative stochastic process; it is a one-parameter family of self-adjoint operators S_t in a W^*-probability space $(\mathscr{A}, \varphi)$, with the following defining characteristics:

(0) $S_0 = 0$.
(1) For $0 < t_1 < t_2 < \infty$, the law of $S_{t_2} - S_{t_1}$ is the semicircular distribution of variance $t_2 - t_1$.
(2) For all n and $0 < t_1 < t_2 < \cdots < t_n < \infty$, the increments $S_{t_1}, S_{t_2} - S_{t_1}$, $S_{t_3} - S_{t_2}$, …, $S_{t_n} - S_{t_{n-1}}$ are freely independent.

The freeness of increments can also be expressed by saying that $S_{t_2} - S_{t_1}$ is free from $\mathcal{S}_{t_1}$ whenever $t_2 > t_1 \ge 0$; here $\mathcal{S}_t$ is the von Neumann algebra generated by $\{S_s \,:\, 0 \le s \le t\}$. In particular, it follows easily that $\varphi[S_{t_2}|\mathcal{S}_{t_1}] = S_{t_1}$ for $t_2 \ge t_1 \ge 0$, so free Brownian motion is a martingale.

There are at least two good ways to construct a free Brownian motion S. The first involves the *free (Boltzman) Fock space* $\mathscr{F}_0(\mathfrak{H})$ constructed on a Hilbert space $\mathfrak{H}$: $\mathscr{F}_0(\mathfrak{H}) \equiv \bigoplus_{n=0}^{\infty} \mathfrak{H}^{\otimes n}$ where the direct-sum and tensor products are Hilbert space operations, and $\mathfrak{H}^{\otimes 0}$ is defined to be a one-dimensional complex space with a distinguished unit basis vector called the *vacuum* Ω (not to be confused with the state space of a probability space). Given any vector $h \in \mathfrak{H}$, the *creation operator* $a^\dagger(h)$ on $\mathscr{F}_0(\mathfrak{H})$ is defined by left tensor-product with h: $a^\dagger(h)\,\psi = h \otimes \psi$. Its adjoint $a(h)$ is the *annihilation operator*, whose action on an n-tensor is given by $a(h)\, h_1 \otimes \cdots \otimes h_n = \langle h, h_1\rangle\, h_2 \otimes \cdots \otimes h_n$ (and $a(h)\Omega = 0$). The creation and annihilation operators are thus raising and lowering operators. Their sum $X(h) = a^\dagger(h) + a(h)$ is a self-adjoint operator known as the *field operator* in the direction h. Let $\mathcal{S}(\mathfrak{H})$ denote the von Neumann algebra generated by $\{X(h)\,;\, h \in \mathfrak{H}\}$, a (small) subset of all bounded operators on the Fock space $\mathscr{F}_0(\mathfrak{H})$. The *vacuum expectation state* $\varphi(Y) = \langle Y\Omega, \Omega\rangle_{\mathscr{F}_0(\mathfrak{H})}$ is a tracial state on $\mathcal{S}(\mathfrak{H})$. Now, take the special case $\mathfrak{H} = L^2(\mathbb{R}_+)$; then $S_t = X(\mathbb{1}_{[0,t]})$ is a free Brownian motion with respect to $(\mathcal{S}(\mathfrak{H}), \varphi)$.

Remark 1.14. This construction of Brownian motion can also be done in the classical case, replacing the free Fock space with the symmetric (Bosonic) Fock space; for this line of thought see [29]. Although it is abstract, it is directly related to concrete constructions in the Wigner, and Wiener, chaos. Note: when $\mathfrak{H} = L^2(\mathbb{R}_+)$, $\mathfrak{H}^{\otimes n}$ may be identified with $L^2(\mathbb{R}_+^n)$, and it is these kernels we will work with throughout most of this paper.

A second, more appealing (if less direct) construction of free Brownian motion uses random matrices. Let W_t^d be a $d \times d$ complex Hermitian matrix all of whose entries above the main diagonal are independent complex standard Brownian motions. Set $S_t^d = d^{-1/2} W_t^d$. Then the "limit as

$d \to \infty$" of S_t^d is a free Brownian motion. This limit property holds in the sense of moments, as follows: equip the algebra $\mathcal{S}^d$ generated by $\{S_t^d\,;\, t \in \mathbb{R}_+\}$ with the tracial state $\varphi_d = \frac{1}{d}\mathbb{E}\,\mathrm{Tr}$. Then if $P = P(X_1, X_2, \ldots, X_k)$ is any polynomial in k non-commuting indeterminates, and $t_1, \ldots, t_k \in \mathbb{R}_+$, then

$$\lim_{d\to\infty} \varphi_d\Big[P(S_{t_1}^d, \ldots, S_{t_k}^d)\Big] = \varphi[P(S_{t_1}, \ldots, S_{t_k})]$$

where $S = (S_t)_{t\geq 0}$ is a free Brownian motion. So, at least in terms of moments, we may think of free Brownian motion as "infinite-dimensional matrix-valued Brownian motion".

Remark 1.15. The algebra $\mathcal{S}^d$ of random matrices described above is not a von Neumann algebra in the standard sense, since its elements do not have finite matrix norms in the standard sup metric. The Gaussian tails of the entries guarantee, however, that mixed matrix moments of all orders are finite, which is all that is needed to make sense of the standard notion of convergence in non-commutative probability theory.

1.3. **The Wigner Integral.** In this section we largely follow [8]; related discussions and extensions can be found in [2, 3, 4]. Taking a note from Wiener and Itô, we define a stochastic integral associated with free Brownian motion in the usual manner. Let S be a free Brownian motion, and let $f \in L^2(\mathbb{R}_+^n)$ be an off-diagonal rectangular indicator function, taking the form $f = \mathbb{1}_{[s_1,t_1]\times\cdots\times[s_n,t_n]}$, where the intervals $[s_1, t_1], \ldots, [s_n, t_n]$ are pairwise disjoint. The *Wigner integral* $I_n^S(f)$ is defined to be the product operator $I_n^S(f) = (S_{t_1} - S_{s_1}) \cdots (S_{t_n} - S_{s_n})$. Extend I_n^S linearly over the set of all off-diagonal step-functions, which is dense in $L^2(\mathbb{R}_+^n)$. The freeness of the increments of S yield the simple Wigner isometry

$$\varphi\left[I_n^S(g)^* I_n^S(f)\right] = \langle f, g\rangle_{L^2(\mathbb{R}_+^n)}. \tag{1.5}$$

In other words, I_n^S is an isometry from the space of off-diagonal step functions into the Hilbert space of operators generated by the free Brownian motion S, equipped with the inner product $\langle X, Y\rangle_\varphi = \varphi\left[Y^* X\right]$. This means I_n^S extends to an isometry from the closure, which is the full space $L^2(\mathbb{R}_+^n)$, thus fully defining the Wigner integral. If f is any function in $L^2(\mathbb{R}_+^n)$, we may write

$$I_n^S(f) = \int f(t_1, \ldots, t_n)\, dS_{t_1} \cdots dS_{t_n}.$$

This stands in contrast to the classical Gaussian Wiener integral, which we shall denote I_n^W:

$$I_n^W(f) = \int f(t_1, \ldots, t_n)\, dW_{t_1} \cdots dW_{t_n}.$$

Remark 1.16. This construction long post-dates Wigner's work. The terminology was invented in [8] as a humorous nod to the fact that Wigner's semicircular law plays the Central Limit role here, and the similarity between the names *Wigner* and *Wiener*.

Remark 1.17. This is the same as Itô's construction of the multiple Wiener integral in classical Wiener-Itô chaos. Note, however, that the increments $S_{t_1} - S_{s_1}, \ldots, S_{t_n} - S_{s_n}$ *do not commute*. Hence, unlike for the Wigner integral, permuting the variables of f generally changes the value of $I_n^S(f)$.

The image of the n-fold Wigner integral I_n^S on all of $L^2(\mathbb{R}_+^n)$ is called the nth order of *Wigner chaos* or *free chaos*. It is easy to calculate that different orders of chaos are orthogonal from one another (in terms of the trace inner product); this also follows from contraction and product formulas below. The non-commutative L^2-space generated by $(S_t)_{t\geq 0}$ is the orthogonal sum of the orders of Wigner chaos; this is the free analogue of the Wiener chaos decomposition.

Remark 1.18. The first Wigner chaos, the image of I_1^S, is a centred *semicircular family* in the sense of [20, Definition 8.15], exactly as the first Wigner chaos is a centred Gaussian family. In particular, In the first order of Wigner chaos, the law of any random variable is semicircular $S(0, t)$ for some variance $t > 0$.

We are generally interested only in self-adjoint elements of a given order of chaos. Taking note of Remark 1.17, we have

$$\begin{aligned} I_n^S(f)^* &= \left(\int f(t_1, \dots, t_n)\, dS_{t_1} \cdots dS_{t_n} \right)^* \\ &= \int \overline{f(t_1, \dots, t_n)}\, dS_{t_n} \cdots dS_{t_1} = \int \overline{f(t_n, \dots, t_1)}\, dS_{t_1} \cdots dS_{t_n} = I_n^S(f^*) \end{aligned} \tag{1.6}$$

where $f^*(t_1, \dots, t_n) = \overline{f(t_n, \dots, t_1)}$. This prompts a definition.

Definition 1.19. *Let n be a natural number, and let f be a function in $L^2(\mathbb{R}_+^n)$.*

(1) *The* **adjoint** *of f is the function $f^*(t_1, \dots, t_n) = \overline{f(t_n, \dots, t_1)}$.*
(2) *f is called* **mirror symmetric** *if $f = f^*$; i.e. if $f(t_1, \dots, t_n) = \overline{f(t_n, \dots, t_1)}$ for almost all $t_1, \dots, t_n \geq 0$ with respect to the product Lebesgue measure*
(3) *f is called* **fully symmetric** *if it is real-valued and, for any permutation σ in the symmetric group Σ_n, $f(t_1, \dots, t_n) = f(t_{\sigma(1)}, \dots, t_{\sigma(n)})$ for almost all $t_1, \dots, t_n \geq 0$ with respect to the product Lebesge measure.*

Thus an element $I_n^S(f)$ of the nth Wigner chaos is self-adjoint iff f is mirror symmetric. Note, in the classical Gaussian Wiener chaos, it is typical to consider only kernels that are fully symmetric, since if $\tilde{f}$ is constructed from f by permuting its arguments then $I_n^W(f) = I_n^W(\tilde{f})$. This relation does *not* hold for I_n^S.

Remark 1.20. The calculation in Equation 1.6 may seem non-rigorous. A more pedantic writing would do the calculation first for an off-diagonal rectangular indicator function $f = \mathbb{1}_{[s_1,t_1]\times\cdots\times[s_n,t_n]}$, in which case the adjoint is merely $[(S_{t_1} - S_{s_1}) \cdots (S_{t_n} - S_{s_n})]^* = (S_{t_n} - S_{s_n}) \cdots (S_{t_1} - S_{s_1})$ since S_t is self-adjoint; extending (sesqui)linearly and completing yields the full result. This is how statements like $(dS_{t_1} \cdots dS_{t_n})^* = dS_{t_n} \cdots dS_{t_1}$ should be interpreted throughout this paper.

Contractions are an important construction in Wigner and Wiener chaos; we briefly review them now.

Definition 1.21. *Let n, m be natural numbers, and let $f \in L^2(\mathbb{R}_+^n)$ and $g \in L^2(\mathbb{R}_+^m)$. Let $p \leq \min\{n, m\}$ be a natural number. The p***th contraction** *$f \overset{p}{\frown} g$ of f and g is the $L^2(\mathbb{R}_+^{n+m-2p})$ function defined by nested integration of the middle p variables in $f \otimes g$:*

$$f \overset{p}{\frown} g\,(t_1, \dots, t_{n+m-2p}) = \int_{\mathbb{R}_+^p} f(t_1, \dots, t_{n-p}, s_1, \dots, s_p) g(s_p, \dots, s_1, t_{n-p+1}, \dots, t_{n+m-2p})\, ds_1 \cdots ds_p.$$

Notice that when $p = 0$, there is no integration, just the products of f and g with disjoint arguments; in other words, $f \overset{0}{\frown} g = f \otimes g$.

Remark 1.22. It is easy to check that the operation $\overset{p}{\frown}$ is not generally associative.

Remark 1.23. In [21, 25, 27, 28] as well as standard references like [22, 23, 26], contractions are usually defined as follows:

$$f \otimes_p f(t_1, \dots, t_{n+m-2p}) = \int_{\mathbb{R}_+^p} (t_1, \dots, t_{n-p}, s_1, \dots, s_p) g(t_{n-p+1}, \dots, t_{n+m-2p}, s_1, \dots, s_p)\, ds_1 \cdots ds_p.$$

Notice that this operation is related to our nested contraction $\overset{p}{\frown}$ as follows:

$$f \otimes_p \overline{g^*}(t_1, \dots, t_{n-p}, t_{n+m-2p}, \dots, t_{n-p+1}) = f \overset{p}{\frown} g(t_1, \dots, t_{n+m-2p}).$$

In other words, up to reordering of variables, the two operations are the same. In particular, if f, g are fully symmetric, then $f \overset{p}{\frown} g$ and $f \otimes_p g$ have the same symmetrizations. This will be relevant to Theorem 1.8 below.

The following lemma records two useful facts about contractions and adjoints; the proof is easy calculation.

Lemma 1.24. *Let n, m be natural numbers, and let $f \in L^2(\mathbb{R}_+^n)$ and $g \in L^2(\mathbb{R}_+^m)$.*

(1) *If $p \leq \min\{n, m\}$ is a natural number, then $(f \overset{p}{\frown} g)^* = g^* \overset{p}{\frown} f^*$.*
(2) *If $n = m$, then the constant $f \overset{n}{\frown} g$ satisfies $f \overset{n}{\frown} g = g \overset{n}{\frown} f = \langle f, g^* \rangle_{L^2(\mathbb{R}^n)}$.*

Contractions provide a useful tool for decomposing products of stochastic integrals, in precise analogy to the classical context. The following is [8, Proposition 5.3.3].

Proposition 1.25 (Biane, Speicher)**.** *Let n, m be natural numbers, and let $f \in L^2(\mathbb{R}_+^n)$ and $g \in L^2(\mathbb{R}_+^m)$. Then*

$$I_n^S(f) \cdot I_m^S(g) = \sum_{p=0}^{\min\{n,m\}} I_{n+m-2p}^S(f \overset{p}{\frown} g). \tag{1.7}$$

Remark 1.26. In the Gaussian Wiener chaos, a similar though more complicated product formula holds:

$$I_n^W(f) \cdot I_m^W(g) = \sum_{p=0}^{\min\{n,m\}} p! \binom{n}{p} \binom{m}{p} I_{n+m-2p}^W(f \overset{p}{\frown} g).$$

It is common for formulas from classical probability to have free probabilistic analogues with simpler forms, usually with binomial coefficients removed. This can be understood in terms of the relevant (smaller) class of partitions that control moments in the theory, as we discuss in Section 1.4 below.

1.4. **Non-Crossing Partitions.** Proposition 1.25 shows that contractions are involved in the algebraic structure of the space of stochastic integrals. Since contractions involve integrals pairing different classes of indices, general moments of stochastic integrals are best understood in terms of a more abstract description of these pairings. For convenience, we write $[n]$ to represent the set $[n] \equiv \{1, 2, \ldots, n\}$ for any positive integer n. If n is even, then a **pairing** or **matching** of $[n]$ is a partition of $[n]$ into $n/2$ disjoint subsets each of size 2. For example, $\{\{1, 6\}, \{2, 5\}, \{3, 4\}\}$ and $\{\{1, 2\}, \{3, 5\}, \{4, 6\}\}$ are two pairings of $[6] = \{1, 2, 3, 4, 5, 6\}$. It is convenient to represent such pairings graphically, as in Figure 1.

FIGURE 1. Two pairings of $[6] = \{1, 2, 3, 4, 5, 6\}$. The first (totally-nested) pairing is non-crossing, while the second is not.

It will be convenient to allow for more general partitions in the sequel. A **partition** of $[n]$ is (as the name suggests) a collection of mutually disjoint nonempty subsets $B_1, \ldots, B_r$ of $[n]$ such that $B_1 \sqcup \cdots \sqcup B_r = [n]$. The subsets are called the **blocks** of the partition. By convention we order the blocks by their least elements; i.e. $\min B_i < \min B_j$ iff $i < j$. The set of all partitions on $[n]$ is denoted $\mathscr{P}(n)$, and the subset of all pairings is $\mathscr{P}_2(n)$.

Definition 1.27. *Let $\pi \in \mathscr{P}(n)$ be a partition of $[n]$. We say π has a* **crossing** *if there are two distinct blocks B_1, B_2 in π with elements $x_1, y_1 \in B_1$ and $x_2, y_2 \in B_2$ such that $x_1 < x_2 < y_1 < y_2$. (This is demonstrated in Figure 1.)*

If $\pi \in \mathscr{P}(n)$ has no crossings, it is said to be a **non-crossing partition**. *The set of non-crossing partitions of $[n]$ is denoted $NC(n)$. The subset of non-crossing pairings is denoted $NC_2(n)$.*

The reader is referred to [20] for an extremely in-depth discussion of the algebraic and enumerative properties of the lattices $NC(n)$. For our purposes, we present only those structural features that will be needed in the analysis of Wigner integrals.

Definition 1.28. *Let $n_1, \ldots, n_r$ be positive integers with $n = n_1 + \cdots + n_r$. The set $[n]$ is then partitioned accordingly as $[n] = B_1 \sqcup \cdots \sqcup B_r$ where $B_1 = \{1, \ldots, n_1\}$, $B_2 = \{n_1 + 1, \ldots, n_1 + n_2\}$, and so forth through $B_r = \{n_1 + \cdots + n_{r-1} + 1, \ldots, n_1 + \cdots + n_r\}$. Denote this partition as $n_1 \otimes \cdots \otimes n_r$.*

Say that a pairing $\pi \in \mathscr{P}_2(n)$ **respects** *$n_1 \otimes \cdots \otimes n_r$ if no block of π contains more than one element from any given block of $n_1 \otimes \cdots \otimes n_r$. (This is demonstrated in Figure 2.) The set of such respectful pairings is denoted $\mathscr{P}_2(n_1 \otimes \cdots \otimes n_r)$. The set of non-crossing pairings that respect $n_1 \otimes \cdots \otimes n_r$ is denoted $NC_2(n_1 \otimes \cdots \otimes n_r)$.*

Partitions $n_1 \otimes \cdots \otimes n_r$ as described in Definition 1.28 are called *interval partitions*, since all of their blocks are intervals. Figure 2 gives some examples of respectful pairings.

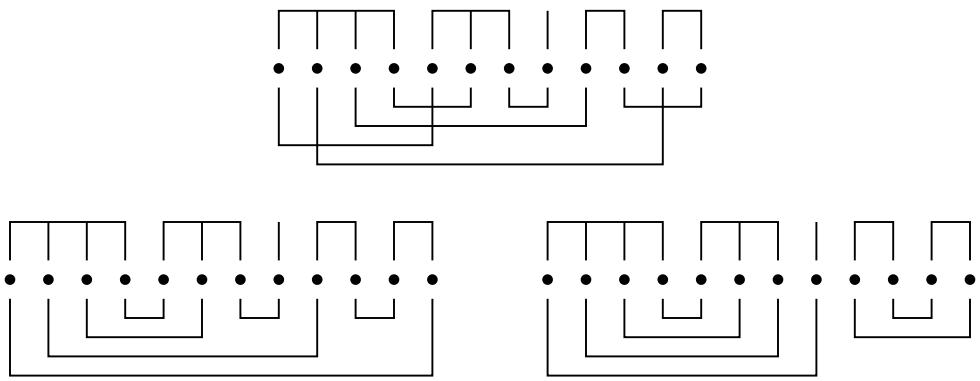

FIGURE 2. The partition $4 \otimes 3 \otimes 1 \otimes 2 \otimes 2$ is drawn above the dots; below are three pairings that respect it. The two bottom pairings are in $NC_2(4 \otimes 3 \otimes 1 \otimes 2 \otimes 2)$.

Remark 1.29. The same definition of *respectful* makes perfect sense for more general partitions, but we will not have occasion to use it for anything but pairings. However, see Remark 1.32.

Remark 1.30. Consider the partition $n_1 \otimes \cdots \otimes n_r = \{B_1, ..., B_r\}$, as well as a pairing $\pi \in \mathscr{P}_2(n)$, where $n = n_1 + \cdots + n_r$. In the classical literature about Gaussian subordinated random fields (cf. [30, Chapter 4] and the references therein) the pair $(n_1 \otimes \cdots \otimes n_r, \pi)$ is represented graphically as follows: (i) draw the blocks $B_1, ..., B_r$ as superposed rows of dots (the ith row containing exactly n_i dots, $i = 1, ..., r$), and (ii) join two dots with an edge if and only if the corresponding two elements constitute a block of π. The graph thus obtained is customarily called a **Gaussian diagram**. Moreover, if π respects $n_1 \otimes \cdots \otimes n_r$ according to Definition 1.28, then the Gaussian diagram is said to be **non-flat**, in the sense that all its edges join different horizontal lines, and therefore are not *flat*, i.e. not horizontal. The non-crossing condition is difficult to discern from the Gaussian diagram representation, which is why we do not use it here; therefore the non-flat terminology is less meaningful for us, and we prefer the intuitive notation from Definition 1.28.

One more property of pairings will be necessary in the proceeding analysis.

Definition 1.31. *Let $n_1, \ldots, n_r$ be positive integers, and let $\pi \in \mathscr{P}_2(n_1 \otimes \cdots \otimes n_r)$. Let B_1, B_2 be two blocks in $n_1 \otimes \cdots \otimes n_r$. Say that π* **links** *B_1* **and** *B_2 if there is a block $\{i, j\} \in \pi$ such that $i \in B_1$ and $j \in B_2$.*

Define a graph C_π whose vertices are the blocks of $n_1 \otimes \cdots \otimes n_r$; C_π has an edge between B_1 and B_2 iff π links B_1 and B_2. Say that π **is connected** *with respect to $n_1 \otimes \cdots \otimes n_r$ (or that π* **connects the blocks of** *$n_1 \otimes \cdots \otimes n_r$) if the graph C_π is connected.*

Denote by $NC_2^c(n_1 \otimes \cdots \otimes n_r)$ the set of non-crossing pairings that both respect and connect $n_1 \otimes \cdots \otimes n_r$.

For example, the second partition in Figure 2 is in $NC_2^c(4 \otimes 3 \otimes 1 \otimes 2 \otimes 2)$, while the third is not. The interested reader may like to check that $NC_2(4 \otimes 3 \otimes 1 \otimes 2 \otimes 2)$ has 5 elements, and all are connected except the third example in Figure 2.

Remark 1.32. For a positive integer n, the set $NC(n)$ of non-crossing partitions on $[n]$ is a lattice whose partial order is given by reverse refinement. The top element 1_n is the partition $\{\{1,\dots,n\}\}$ containing only one block; the bottom element 0_n is $\{\{1\},\dots,\{n\}\}$ consisting of n singletons. The conditions of Definitions 1.28 and 1.31 can be described elegantly in terms of the lattice operations meet $\wedge$ (i.e. inf) and join $\vee$ (i.e. sup). If $n = n_1 + \cdots + n_r$, then $\pi \in NC_2(n)$ respects $n_1 \otimes \cdots \otimes n_r$ if and only if $\pi \wedge (n_1 \otimes \cdots \otimes n_r) = 0_n$; π connects the blocks of $n_1 \otimes \cdots \otimes n_r$ if and only if $\pi \vee (n_1 \otimes \cdots \otimes n_r) = 1_n$.

Remark 1.33. Given $n_1,\dots,n_r$ and a respectful non-crossing pairing $\pi \in NC_2(n_1 \otimes \cdots \otimes n_r)$, there is a unique decomposition of the full index set $[n]$, where $n = n_1 + \cdots + n_r$, into subsets $D_1,\dots,D_m$ of the blocks of $n_1 \otimes \cdots \otimes n_r$, such that the restriction of π to each D_i connects the blocks of D_i. These D_i are the vertices of the graph C_π grouped according to connected components of the graph. For example, in the third pairing in Figure 2, the decomposition has two components $D_1 = 4 \otimes 3 \otimes 1$ and $D_2 = 2 \otimes 2$. To be clear, this notation is slightly misleading since the $2 \otimes 2$ in this case represents indices $\{9,10\},\{11,12\}$, not $\{1,2\},\{3,4\}$; we will be a little sloppy about this to make the following much more readable.

There is a close connection between respectful non-crossing pairings and expectations of products of Wigner integrals. To see this, we first introduce an action of pairings on functions.

Definition 1.34. *Let n be an even integer, and let $\pi \in \mathscr{P}_2(n)$. Let $f\colon \mathbb{R}_+^n \to \mathbb{C}$ be measurable. The* **pairing integral** *of f with respect to π, denoted $\int_\pi f$, is defined (when it exists) to be the constant*

$$\int_\pi f = \int f(t_1,\dots,t_n) \prod_{\{i,j\}\in\pi} \delta(t_i - t_j)\, dt_1 \cdots dt_n.$$

For example, given the second pairing $\pi = \{\{1,2\},\{3,5\},\{4,6\}\}$ in Figure 1,

$$\int_\pi f = \int_{\mathbb{R}_+^3} f(r,r,s,t,s,t)\, drdsdt.$$

Remark 1.35. The operation $\int_\pi$ is not well-defined on $L^2(\mathbb{R}_+^n)$; for example, if $n = 2$ and $\pi = \{\{1,2\}\}$ then $\int_\pi f$ is finite if and only if f is the kernel of a trace class Hilbert-Schmidt operator on $L^2(\mathbb{R}_+)$. However, it is easy to see that $\int_\pi f$ is well-defined whenever f is a tensor product of functions and π respects the interval partition induced by this tensor product (cf. Lemma 2.1). (This is one of the reasons why one should interpret multiple stochastic integrals as integrals on product spaces without diagonals, since integrals on diagonals are in general not defined.) This is precisely the case we will deal with in all of the following.

Note that a contraction $f \overset{p}{\frown} g$ can be interpreted in terms of a pairing integral, using a **partial pairing**; i.e. one that pairs only a subset of the indices. If $f \in L^2(\mathbb{R}_+^n)$ and $g \in L^2(\mathbb{R}_+^m)$, and $p \le \min\{n,m\}$ is a natural number, then

$$f \overset{p}{\frown} g = \int_{\tau_p} f \otimes g$$

where τ_p is the partial pairing $\{\{n,n+1\},\{n-1,n+2\},\dots,\{n-p+1,n+p\}\}$ of $[n+m]$.

The partial contraction pairings τ_p provide a useful decomposition of the set of all respectful non-crossing pairings, in the following sense. Let $n_1,\dots,n_r$ be positive integers. If $p \le \min\{n_1,n_2\}$, the partial pairing τ_p acts (on the left) on the partition $n_1 \otimes n_2 \otimes n_3 \otimes \cdots \otimes n_r$ to produce the partition $(n_1 + n_2 - 2p) \otimes n_3 \otimes \cdots \otimes n_r$. That is, τ_p joins the first two blocks of $n_1 \otimes \cdots \otimes n_r$ and deletes the paired indices to produce a new interval partition. This is demonstrated in Figure 4.

Considered as such a function, we may then compose partial contraction pairings. For example, following Figure 4, we may act again with τ_1 on $5 \otimes 1 \otimes 2 \otimes 2$ to yield $4 \otimes 2 \otimes 2$; then with τ_2 to get $2 \otimes 2$; and finally τ_2 maps this partition to the empty partition. Stringing these together gives a respectful pairing of the original interval partition, which we denote $\tau_2 \circ \tau_2 \circ \tau_1 \circ \tau_1$. Figure 5 displays this composition.

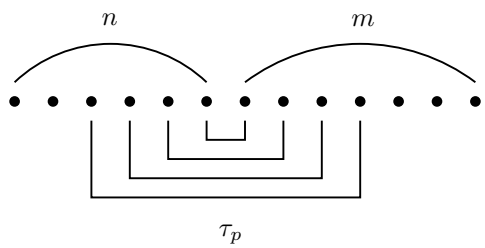

FIGURE 3. A partial pairing τ_p of $[n+m]$ corresponding to a p-contraction; here $n = 6$, $m = 7$, and $p = 4$.

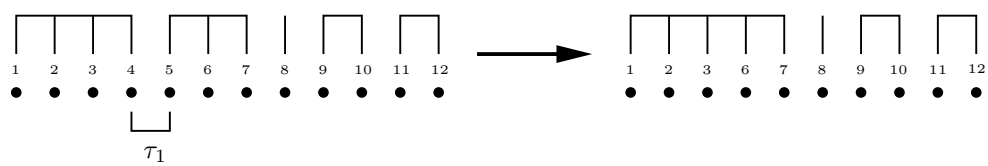

FIGURE 4. The partial pairing τ_1 acts on the left on $4 \otimes 3 \otimes 1 \otimes 2 \otimes 2$, joining the first two blocks and deleting the middle indices, to produce the partition $5 \otimes 1 \otimes 2 \otimes 2$. The indices are labeled to make the action clearer.

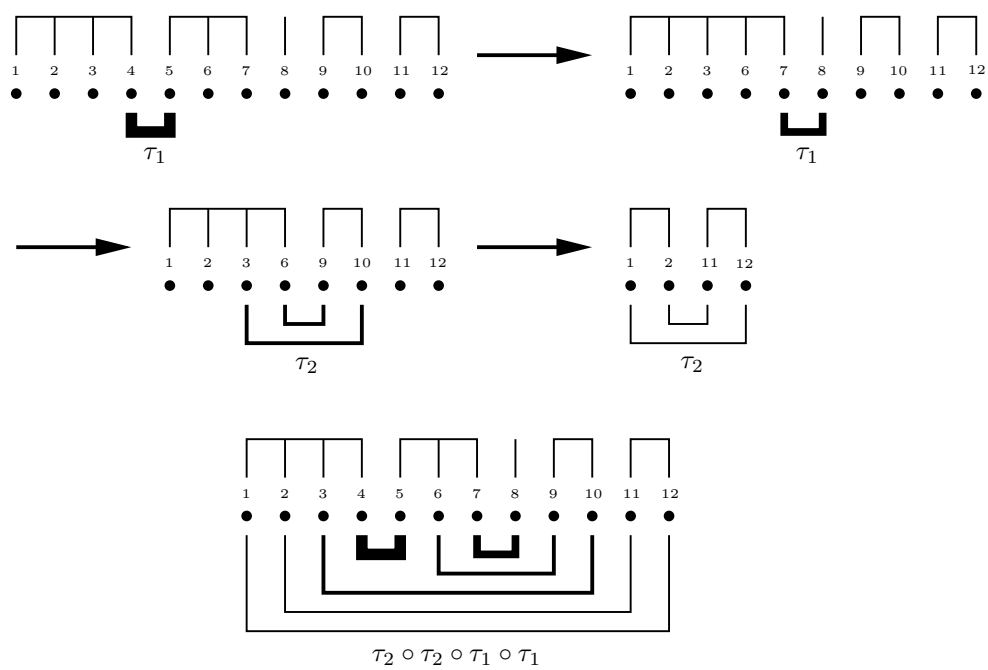

FIGURE 5. The composition $\tau_2 \circ \tau_2 \circ \tau_1 \circ \tau_1$ produces a non-crossing pairing that respects $4 \otimes 3 \otimes 1 \otimes 2 \otimes 2$.

To be clear: we start from the left and then do the partial pairing τ_p between the first and second block; after this application, the (rest of the) first and second blocks are treated as a single block. This is still the case if $p = 0$; here there are no paired indices, but the action of τ_0 records the fact that, for further discussion, the first two blocks are now connected. An example is given in Figure 6 below, where the action of τ_0 is graphically represented by a dashed line.

With this convention, further τ_p may act only on the first two blocks, which results in a *unique* decomposition of any respectful pairing into partial contractions, as the next lemma makes clear.

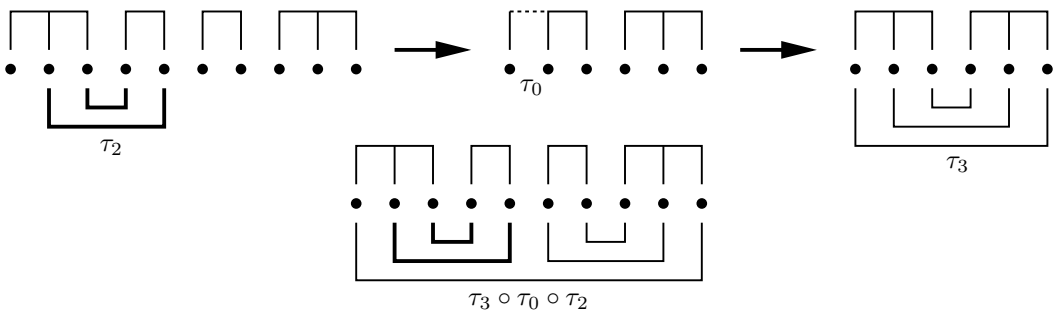

FIGURE 6. The pairing $\pi = \{\{1,10\},\{2,5\},\{3,4\},\{6,9\},\{7,8\}\}$ respects the interval partition $3 \otimes 2 \otimes 2 \otimes 3$. Its decomposition is given by $\pi = \tau_3 \circ \tau_0 \circ \tau_2$.

Lemma 1.36. *Let $n_1, \ldots, n_r$ be positive integers, and let $\pi \in NC_2(n_1 \otimes \cdots \otimes n_r)$. There is a unique sequence of partial contractions $\tau_{p_1}, \ldots, \tau_{p_{r-1}}$ such that $\pi = \tau_{p_{r-1}} \circ \cdots \circ \tau_{p_1}$.*

Proof. Any non-crossing pairing must contain an interval $\{i, i+1\}$, cf. [20, Remark 9.2(2)]. Hence, since π respects $n_1 \otimes \cdots \otimes n_r = \{B_1, \ldots, B_r\}$, there must be two *adjacent* blocks linked by π. Let $j \in [k]$ be the smallest index for which B_j, B_{j+1} are connected by π; hence all of the blocks $B_1, \ldots, B_j$ pair among the blocks $B_{j+1}, \ldots, B_r$. Note that any partition that satisfies this constraint and also respects the coarser interval partition $(n_1 + \cdots + n_j) \otimes n_{j+1} \otimes \cdots \otimes n_r$ is automatically in $NC_2(n_1 \otimes \cdots \otimes n_r)$. In other words, we can begin by decomposing $\pi = \pi' \circ (\tau_0)^{j-1}$, where $\pi' \in NC_2((n_1 + \cdots + n_j) \otimes n_{j+1} \otimes \cdots \otimes n_r)$ links the first and second blocks of this interval partition. By construction, this j is unique.

Let $n_0 = n_1 + \cdots + n_j$, so π' links $\{1, \ldots, n_0\}$ with $\{n_0 + 1, \ldots, n_0 + n_{j+1}\}$. It follows that $\{n_0, n_0+1\} \in \pi'$: for if n_0 pairs with some element n_0+i with $i \geq 2$ then $n_0+1, \ldots, n_0+i-1$ cannot pair anywhere without introducing crossings. Following these lines, an easy induction shows that there is some $p \in [\min\{n_0, n_{j+1}\}]$ such that the pairs $\{n_0, n_0+1\}, \{n_0-1, n_0+2\}, \ldots, \{n_0-p+1, n_0+p\}$ are in π', while all indices $1, \ldots, n_0 - p$ and $n_0 + p + 1, \ldots, n_0 + n_{j+1}$ pair outside $[n_0 + n_{j+1}]$. In other words, $\pi' = \pi'' \circ \tau_p$ for some non-crossing pairing π'' that respects $(n_0 - p) \otimes (n_{j+1} - p) \otimes n_3 \otimes \cdots \otimes n_r$. What's more, since p was chosen maximally so that there are no further pairings in the blocks $(n_0 - p) \otimes (n_{j+1} - p)$, these two may be treated as a single block and π'' is only constrained to be in $NC_2(n_0 + n_{j+1} - 2p, n_3, \ldots, n_r)$. Since $p > 0$, the lemma now follows by a finite induction; uniqueness results from the left-most choice of j and maximal choice of p at each stage. □

By carefully tracking the proof of Lemma 1.36, we can give a complete description of the class of respectful pairings in terms of their decompositions.

Lemma 1.37. *Let $n_1, \ldots, n_r$ be positive integers. The class $NC_2(n_1 \otimes \cdots \otimes n_r)$ is equal to the set of compositions $\tau_{p_{r-1}} \circ \cdots \circ \tau_{p_1}$ where $(p_1, \ldots, p_{r-1})$ satisfy the inequalities*

$$\begin{aligned} &0 \leq p_1 \leq \min\{n_2, n_1\}, \\ &0 \leq p_k \leq \min\{n_{k+1}, n_1 + \cdots + n_k - 2p_1 - \cdots - 2p_{k-1}\}, \quad 1 < k < r-1, \\ &2(p_1 + \cdots + p_{r-1}) = n_1 + \cdots + n_r. \end{aligned} \tag{1.8}$$

Inequalities 1.8 in Lemma 1.37 successively guarantee that the partial contractions τ_{p_k} in the decomposition of π only contract elements from within two adjacent blocks; the final equality is to guarantee that all indices are paired in the end. Since every respectful pairing has a contraction decomposition, and each contraction decomposition satisfying Inequalities 1.8 is respectful (a fact which follows from an easy induction), these inequalities define $NC_2(n_1 \otimes \cdots \otimes n_r)$. This completely combinatorial description would be the starting point for an enumeration of the class of respectful pairings; however, even in the case $n_1 = \cdots = n_r$, the enumeration appears to be extremely difficult.

We conclude this section with a proposition that demonstrates the efficacy of pairing integrals and non-crossing pairings in the analysis of Wigner integrals.

Proposition 1.38. *Let $n_1, \ldots, n_r$ be positive integers, and suppose $f_1, \ldots, f_r$ are functions with $f_i \in L^2(\mathbb{R}_+^{n_i})$ for $1 \leq i \leq r$. The expectation φ of the product of Wigner integrals $I_{n_1}^S(f_1) \cdots I_{n_r}^S(f_r)$ is given by*

$$\varphi\left[I_{n_1}^S(f_1) \cdots I_{n_r}^S(f_r)\right] = \sum_{\pi \in NC_2(n_1 \otimes \cdots \otimes n_r)} \int_\pi f_1 \otimes \cdots \otimes f_r. \tag{1.9}$$

Remark 1.39. This result has been used in the literature (for example to prove [8, Theorem 5.3.4]), but it appears to have a folklore status in that a proof has not been written down. The following proof is an easy application of Proposition 1.25, together with Lemma 1.37.

Proof. By iterating Equation 1.7, we arrive at the following unwieldy expression. (For readability, we have hidden the explicit dependence of the Wigner integral I_n^S on the number of variables n in its argument.)

$$I^S(f_1) \cdots I^S(f_r) = \sum_{p_{r-1}} \cdots \sum_{p_1} I^S\left(\left(\cdots\left(\left(f_1 \overset{p_1}{\frown} f_2\right) \overset{p_2}{\frown} f_3\right) \cdots\right) \overset{p_{r-1}}{\frown} f_r\right), \tag{1.10}$$

where $p_1, \ldots, p_{r-1}$ range over the set specified by the first two inequalities in Equation 1.8. (This is the range of the p_k for the same reason that those inequalities specify the range of the p_k for contraction decompositions: the first two inequalities in 1.8 merely guarantee that contractions are performed, successively, only between two adjacent blocks of $n_1 \otimes \cdots \otimes n_r$.) Note: following Remark 1.22, the order the contractions are performed in Equation 1.10 is important.

Taking expectation in Equation 1.10, note that most terms have $\varphi = 0$ since any non-trivial stochastic integral is centred (as it is orthogonal to constants in the 0th order of chaos). Hence, the only terms that contribute to the sum are those for which the iterated contractions pair all indices of the functions; that is, the sum is over those $p_1, \ldots, p_{r-1}$ for which $2(p_1 + \cdots + p_{r-1}) = n_1 + \cdots + n_r$, so that the stochastic integral I^S in the sum is I_0^S. Since such a trivial stochastic integral is just the identity on the constant function inside, this shows that

$$\varphi\left[I^S(f_1) \cdots I^S(f_r)\right] = \sum_{p_{r-1}} \cdots \sum_{p_1} \left(\left(\cdots\left(\left(f_1 \overset{p_1}{\frown} f_2\right) \overset{p_2}{\frown} f_3\right) \cdots\right) \overset{p_{r-1}}{\frown} f_r\right),$$

where the sum is over those $p_1, \ldots, p_{r-1}$ satisfying the same inequalities mentioned above, along with the condition $2(p_1 + \cdots + p_{r-1}) = n_1 + \cdots + n_r$; i.e. the p_k satisfy Inequalities 1.8. Each such iterated contraction integral corresponds to a pairing integral of $f_1 \otimes \cdots \otimes f_r$ in the obvious fashion,

$$\left(\left(\cdots\left(\left(f_1 \overset{p_1}{\frown} f_2\right) \overset{p_2}{\frown} f_3\right) \cdots\right) \overset{p_{r-1}}{\frown} f_r\right) = \int_{\tau_{p_{r-1}} \circ \cdots \circ \tau_{p_1}} f_1 \otimes \cdots \otimes f_r.$$

Lemma 1.37 therefore concludes the proof. □

Remark 1.40. Another proof of Proposition 1.38 can be achieved using a random matrix approximation to the free Brownian motion, as discussed in Section 1.2. The starting point is the classical counterpoint to Proposition 1.38 [16, Theorem 7.33], which states that the expectation of a product of Wiener integrals is a similar sum of pairing integrals over respectful (i.e. non-flat) pairings, but in this case crossing pairings must also be included. Modifying this formula for matrix-valued Brownian motion, and controlling the leading terms in the limit as matrix size tends to infinity using the so-called "genus expansion", leads to Equation 1.9. The (quite involved) details are left to the interested reader.

2. Central Limit Theorems

We begin by proving Theorem 1.6, which we restate here for convenience.

Theorem 1.6. *Let n be a natural number, and let $(f_k)_{k \in \mathbb{N}}$ be a sequence of functions in $L^2(\mathbb{R}_+^n)$, each with $\|f_k\|_{L^2(\mathbb{R}_+^n)} = 1$. The following statements are equivalent.*

(1) *The fourth absolute moments of the stochastic integrals $I_n^S(f_k)$ converge to 2:*

$$\lim_{k \to \infty} \varphi(|I_n^S(f_k)|^4) = 2.$$

(2) *All non-trivial contractions of f_k converge to 0: for each $p = 1, 2, \ldots, n-1$,*

$$\lim_{k\to\infty} f_k \overset{p}{\frown} f_k^* = 0 \quad \textit{in} \quad L^2(\mathbb{R}_+^{2n-2p}).$$

Proof. The expression $|I_n^S(f_k)|^4$ is short-hand for $[I_n^S(f_k) \cdot I_n^S(f_k)^*]^2$. Since (according to Equation 1.6) $I_n^S(f_k)^* = I_n^S(f_k^*)$, this is a product of Wigner integrals, to which we will apply Proposition 1.25. First,

$$I_n^S(f_k) \cdot I_n^S(f_k^*) = \sum_{p=0}^{n} I_{2n-2p}^S(f_k \overset{p}{\frown} f_k^*). \tag{2.1}$$

The Wigner integrals on the right-hand-side of Equation 2.1 are in different orders of chaos, and hence are orthogonal (with respect to the φ-inner product). Thus, we can expand

$$\begin{aligned}\varphi(|I_n^S(f_k)|^4) &= \varphi\left[(I_n^S(f_k) \cdot I_n^S(f_k^*))^2\right] \\ &= \langle I_n^S(f_k) \cdot I_n^S(f_k^*)\,,\, I_n^S(f_k) \cdot I_n^S(f_k^*)\rangle_\varphi \\ &= \sum_{p=0}^{n} \langle I_{2n-2p}^S(f_k \overset{p}{\frown} f_k^*)\,,\, I_{2n-2p}^S(f_k \overset{p}{\frown} f_k^*)\rangle_\varphi,\end{aligned}$$

where in the second equality we have used the fact that $I_n^S(f_k) \cdot I_n^S(f_k^*)$ is self-adjoint. Now employing the Wigner isometry (Equation 1.5), this yields

$$\varphi(|I_n^S(f_k)|^4) = \sum_{p=0}^{n} \langle f_k \overset{p}{\frown} f_k^*, f_k \overset{p}{\frown} f_k^* \rangle_{L^2(\mathbb{R}_+^{2n-2p})}. \tag{2.2}$$

Consider first the two boundary terms in the sum in Equation 2.2. When $p = n$, we have

$$f_k \overset{n}{\frown} f_k^* = \langle f_k, f_k \rangle_{L^2(\mathbb{R}_+^n)} = 1$$

according to Lemma 1.24(2) and the assumption that f_k is normalized in L^2. On the other hand, when $p = 0$, the contraction $f_k \overset{0}{\frown} f_k$ is just the tensor product $f \otimes f^*$, and we have

$$\langle f_k \otimes f_k^*, f_k \otimes f_k^* \rangle_{L^2(\mathbb{R}_+^{2n})} = \langle f_k, f_k \rangle_{L^2(\mathbb{R}_+^n)} \langle f_k^*, f_k^* \rangle_{L^2(\mathbb{R}_+^n)} = 1.$$

(Both terms in the product are equal to $\|f_k\|_{L^2}^2 = 1$, following Definition 1.19 of f_k^*.) Equation 2.2 can therefore be rewritten as

$$\varphi(|I_n^S(f_k)|^4) = 2 + \sum_{p=1}^{n-1} \left\| f_k \overset{p}{\frown} f_k^* \right\|_{L^2(\mathbb{R}_+^{2n-2p})}^2. \tag{2.3}$$

Thus, the statement that the limit of $\varphi(|I_n^S(f_k)|^4)$ equals 2 is equivalent to the statement that the limit of the sum on the right-hand-side of Equation 2.3 is 0. This is a sum of non-negative terms, and so each of the terms must have limit 0. This completes the proof. □

Corollary 1.7 now follows quite easily.

Corollary 1.7. *Let $n \geq 2$ be an integer, and consider a non-zero mirror symmetric function $f \in L^2(\mathbb{R}_+^n)$. Then the Wigner integral $I_n^S(f)$ satisfies $\varphi[I_n^S(f)^4] > 2\varphi[I_n^S(f)^2]^2$. In particular, the distribution of the Wigner integral $I_n^S(f)$ cannot be semicircular.*

Proof. By rescaling, we may assume that $\|f\|_{L^2(\mathbb{R}_+^n)} = 1$; in this case, Equation 2.3 shows that $\varphi[I_n^S(f)^4] \geq 2\varphi[I_n^S(f)^2]^2$. To achieve a contradiction, we assume that $\varphi[I_n^S(f)^4] = 2\varphi[I_n^S(f)^2]^2 = 2$ (which would be the case if $I_n^S(f)$ were semicircular). Then the constant sequence $f_k = f$ for all k satisfies condition (1) of Theorem 1.6; hence, for $1 \leq p \leq n-1$,

$$f \overset{p}{\frown} f^* = \lim_{k\to\infty} f_k \overset{p}{\frown} f_k^* = 0 \quad \text{in} \quad L^2(\mathbb{R}_+^{2n-2p}).$$

Take, for example, $p = n-1$. Let $g \in L^2(\mathbb{R}_+)$, so that $g \otimes g^* \in L^2(\mathbb{R}_+^2)$. Then we may calculate the inner product

$$\begin{aligned}
\langle f \overset{n-1}{\frown} f^*, g \otimes g^* \rangle_{L^2(\mathbb{R}_+^2)} &= \int [f \overset{n-1}{\frown} f^*](s,t) \overline{[g \otimes g^*](s,t)}\, dsdt \\
&= \int \left(\int f(s, s_2, \ldots, s_n) f^*(s_n, \ldots, s_2, t)\, ds_2 \cdots ds_n \right) \overline{g(s)} g(t)\, dsdt \\
&= \int g^*(s) f(s, s_2, \ldots, s_n) \cdot \overline{g^*(t) f(t, s_2, \ldots, s_n)}\, dsdtds_2 \cdots ds_n \\
&= \| g^* \overset{1}{\frown} f \|^2_{L^2(\mathbb{R}_+^{n-1})}.
\end{aligned}$$

By assumption, $f \overset{n-1}{\frown} f^* = 0$, and so we have $g^* \overset{1}{\frown} f = 0$ for all $g \in L^2(\mathbb{R}_+)$. That is, for almost all $s_2, \ldots, s_n \in \mathbb{R}_+$,

$$\int_0^\infty \overline{g(s)} f(s, s_2, \ldots, s_n)\, ds = 0.$$

For fixed $s_2, \ldots, s_n$ for which this holds, taking g to be the function $g(s) = f(s, s_2, \ldots, s_n)$ yields that $f(s, s_2, \ldots, s_n) = 0$ for almost all s. Hence, $f = 0$ almost surely. This contradicts the normalization $\|f\|_{L^2(\mathbb{R}_+^n)} = 1$. □

We now proceed towards the proof of Theorem 1.3. First, we state a technical result that will be of use.

Lemma 2.1. *Let $n_1, \ldots, n_r$ be positive integers, and let $f_i \in L^2(\mathbb{R}_+^{n_i})$ for $1 \le i \le r$. Let π be a pairing in $\mathscr{P}_2(n_1 \otimes \cdots \otimes n_r)$. Then*

$$\left| \int_\pi f_1 \otimes \cdots \otimes f_r \right| \le \|f_1\|_{L^2(\mathbb{R}_+^{n_1})} \cdots \|f_r\|_{L^2(\mathbb{R}_+^{n_r})}.$$

Proof. This follows by iterated application of the Cauchy-Schwarz inequality along the pairs in π. It is proved as [16, Lemma 7.31]. □

The following proposition shows that contractions control all important pairing integrals.

Proposition 2.2. *Let n be a positive integer. Consider a sequence $(f_k)_{k \in \mathbb{N}}$ with $f_k \in L^2(\mathbb{R}_+^n)$ for all k, such that*

1. *$f_k = f_k^*$ for all k.*
2. *There is a constant $M > 0$ such that $\|f_k\|_{L^2(\mathbb{R}_+^n)} \le M$ for all k.*
3. *For each $p = 1, 2, \ldots, n-1$,*

$$\lim_{k \to \infty} f_k \overset{p}{\frown} f_k^* = 0 \quad \textit{in} \quad L^2(\mathbb{R}_+^{2n-2p}).$$

Let $r \ge 3$, and let π be a connected non-crossing pairing that respects $n^{\otimes r}$: $\pi \in NC_2^c(n^{\otimes r})$ (cf. Definitions 1.28 and 1.31). Then

$$\lim_{k \to \infty} \int_\pi f_k^{\otimes r} = 0.$$

Proof. Begin by decomposing $\pi = \tau_{p_{r-1}} \circ \cdots \circ \tau_{p_1}$ following Lemma 1.36. There must be some non-zero p_i; to simplify notation, we assume that $p_1 > 0$. (Otherwise we may perform a cyclic rotation and relabel indices from the start.) Note also that, since π connects the blocks of $n^{\otimes r}$ and $r > 2$, it follows that $p_1 < n$: else the first two blocks $\{1, \ldots, n\}$ and $\{n+1, \ldots, 2n\}$ would form a connected component in the graph C_π from Definition 1.31, so C_π would not be connected. Set $\pi' = \tau_{p_k} \circ \cdots \tau_{p_2}$, so that $\pi = \pi' \circ \tau_{p_1}$. Then (as in the proof of Proposition 1.38) it follows that

$$\int_\pi f_k^{\otimes r} = \int_{\pi'} (f_k \overset{p_1}{\frown} f_k) \otimes f_k^{\otimes (r-2)}. \tag{2.4}$$

To make this clear, an example is given in Figure 7, with the corresponding iterations of the integral in Equation 2.5.

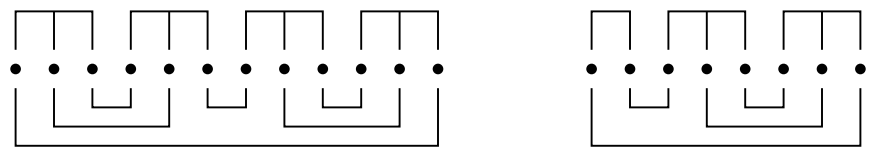

$\pi = \pi' \circ \tau_2$ $\qquad$ π'

FIGURE 7. A pairing $\pi \in NC_2^c(3^{\otimes 4})$, with the first step in its contraction decomposition (per Lemma 1.36).

$$\begin{aligned}\int_\pi f^{\otimes 4} &= \int_{\mathbb{R}_+^6} f(t_1,t_2,t_3)f(t_3,t_2,t_4)f(t_4,t_5,t_6)f(t_6,t_5,t_1)\,dt_1dt_2dt_3dt_4dt_5dt_6 \\ &= \int_{\mathbb{R}_+^4} (f \overset{2}{\frown} f)(t_1,t_4)f(t_4,t_5,t_6)f(t_6,t_5,t_1)\,dt_1dt_4dt_5dt_6 = \int_{\pi'} (f \overset{2}{\frown} f) \otimes f^{\otimes 2}.\end{aligned} \tag{2.5}$$

Employing Lemma 2.1, we therefore have

$$\begin{aligned}\left|\int_\pi f_k^{\otimes r}\right| &= \left|\int_{\pi'} (f_k \overset{p_1}{\frown} f_k) \otimes f_k^{\otimes (r-2)}\right| \\ &\leq \|f_k \overset{p_1}{\frown} f_k\|_{L^2(\mathbb{R}_+^{2n-2p})} \cdot \|f_k\|_{L^2(\mathbb{R}_+^n)}^{r-2} \\ &\leq \|f_k \overset{p_1}{\frown} f_k\|_{L^2(\mathbb{R}_+^{2n-2p})} \cdot M^{r-2},\end{aligned} \tag{2.6}$$

using assumption (2) in the proposition. But from assumptions (1) and (3), $\|f_k \overset{p_1}{\frown} f_k\|_{L^2(\mathbb{R}_+^{2n-2p})} \to 0$. The result follows. □

We can now prove the main theorem of the paper, Theorem 1.3, which we restate here for convenience.

Theorem 1.3. *Let $n \geq 2$ be an integer, and let $(f_k)_{k\in\mathbb{N}}$ be a sequence of mirror symmetric functions in $L^2(\mathbb{R}_+^n)$, each with $\|f_k\|_{L^2(\mathbb{R}_+^n)} = 1$. The following statements are equivalent.*

(1) *The fourth moments of the stochastic integrals $I_n^S(f_k)$ converge to 2:*

$$\lim_{k\to\infty} \varphi(I_n^S(f_k)^4) = 2.$$

(2) *The random variables $I_n^S(f_k)$ converge in law to the standard semicircular distribution $S(0,1)$ as $k \to \infty$.*

Proof. As pointed out in Remark 1.5, condition (2) trivially implies condition (1) since the semicircular distribution has compact support. We will use Proposition 2.2, together with Proposition 1.38, to prove the remarkable reverse implication.

Since $S(0,1)$ is compactly supported, it is enough to verify that the moments of $I_n^S(f_k)$ converge to the moments of $S(0,1)$, as described following Equation 1.4. Since $I_n^S(f_k)$ is orthogonal from the constant 1 in the first order of chaos, $I_n^S(f_k)$ is centred; the Wigner isometry of Equation 1.5 yields that the second moment of $I_n^S(f_k)$ is constantly 1 due to normalization. Therefore, take $r \geq 3$. Proposition 1.38 yields that

$$\varphi\left[I_n^S(f_k)^r\right] = \sum_{\pi\in NC_2(n^{\otimes r})} \int_\pi f_k^{\otimes r}. \tag{2.7}$$

Following Remark 1.33, any $\pi \in NC_2(n^{\otimes r})$ can be (uniquely) decomposed into a disjoint union of connected pairings $\pi = \pi_1 \sqcup \cdots \sqcup \pi_m$ with $\pi_i \in NC_2^c(n^{\otimes r_i})$ for some r_is with $r_1 + \cdots + r_m = r$.

Since the decomposition respects the partition $n^{\otimes r}$, the pairing integrals decompose as products:

$$\int_{\pi} f_k^{\otimes r} = \prod_{i=1}^{m} \int_{\pi_i} f_k^{\otimes r_i}. \tag{2.8}$$

Assumption (1) in this theorem implies, by Theorem 1.6, that $f_k \overset{p}{\frown} f_k^* \to 0$ in L^2 for each $p \in \{1, \ldots, n-1\}$. Therefore, from Proposition 2.2, it follows that for each of the decomposed connected pairings π_i with $r_i \geq 3$, the corresponding pairing integral $\int_{\pi_i} f_k^{\otimes r_i}$ converges to 0 in L^2. Since the number of factors m in the product is bounded above by r (which does not grow with k), this demonstrates that Equation 2.7 really expresses the limiting rth moment as a sum over a small subset of $NC_2(n^{\otimes r})$. Let $NC_2^2(n^{\otimes r})$ denote the set of those respectful pairings π such that, in the decomposition $\pi = \pi_1 \sqcup \cdots \sqcup \pi_m$, each $r_i = 2$; in other words, such that the connected components of the graph C_π each have two vertices. Thus we have shown that

$$\lim_{k\to\infty} \varphi\left[I_n^S(f_k)^r\right] = \sum_{\pi \in NC_2^2(n^{\otimes r})} \lim_{k\to\infty} \int_{\pi} f_k^{\otimes r}. \tag{2.9}$$

Note: if each $r_i = 2$ and $r = r_1 + \cdots + r_m$ then $r = 2m$ is even. In other words, if r is odd then $NC_2^2(n^{\otimes r})$ is empty, and we have proved that all limiting odd moments of $I_n^S(f_k)$ are 0. If $r = 2m$ is even, on the other hand, then the factors π_i in the decomposition of π can each be thought of as $\pi_i \in NC_2(n \otimes n)$. The reader may readily check that the only non-crossing pairing that respects $n \otimes n$ is the totally nested pairing $\pi_i = \{\{n, n+1\}, \{n-1, n+2\}, \ldots, \{1, 2n\}\}$ in Figure 1. Thus, utilizing the mirror symmetry of f_k,

$$\int_{\pi_i} f_k \otimes f_k = \int_{\pi_i} f_k \otimes f_k^* = \|f_k\|^2_{L^2(\mathbb{R}_+^n)} = 1.$$

Therefore, Equation 2.9 reads

$$\lim_{k\to\infty} \varphi\left[I_n^S(f_k)^{2m}\right] = \sum_{\pi \in NC_2^2(n^{\otimes 2m})} 1 \quad = \left|NC_2^2(n^{\otimes 2m})\right|. \tag{2.10}$$

In each tensor factor of $n^{\otimes 2m}$, all edges of each pairing in π act as one unit (since they pair in a uniform nested fashion as described above); this sets up a bijection $NC_2^2(n^{\otimes 2m}) \cong NC_2(2m)$. The set of non-crossing pairings of $[2m]$ is well known to be enumerated by the Catalan number C_m, cf. [20, Lemma 8.9], which is the $2m$th moment of $S(0,1)$ (see the discussion following Equation 1.4). This completes the proof. □

Next we prove the Wigner-Wiener transfer principle, Theorem 1.8, restated below.

Theorem 1.8. *Let $n \geq 2$ be an integer, and let $(f_k)_{k\in\mathbb{N}}$ be a sequence of fully symmetric functions in $L^2(\mathbb{R}_+^n)$. Let $\sigma > 0$ be a finite constant. Then, as $k \to \infty$,*

(1) $\mathbb{E}\left[I_n^W(f_k)^2\right] \to n!\sigma^2$ *if and only if* $\varphi\left[I_n^S(f_k)^2\right] \to \sigma^2$.

(2) *If the asymptotic relations in (1) are verified, then $I_n^W(f_k)$ converges in law to a normal random variable $N(0, n!\sigma^2)$ if and only if $I_n^S(f_k)$ converges in law to a semicircular random variable $S(0, \sigma^2)$.*

Proof. Point (1) is a simple consequence of the Wigner isometry of Equation 1.5, stating that for fully symmetric $f \in L^2(\mathbb{R}_+^n)$, $\varphi\left[I_n^S(f)^2\right] = \|f\|_2^2$ (since f is fully symmetric, $f = f^*$ in particular), together with the classical Wiener isometry which states that $\mathbb{E}\left[I_n^W(f)^2\right] = n!\|f\|_2^2$. For point (2), by renormalizing f_k we may apply Theorems 1.3 and 1.6 to see that $I_n^S(f_k)$ converges to $S(0,1)$ in law if and only if the contractions $f_k \overset{p}{\frown} f_k^* = f_k \overset{p}{\frown} f_k$ converge to 0 in L^2 for $p = 1, 2, \ldots, n-1$. Since f is fully symmetric, these nested contractions $f_k \overset{p}{\frown} f_k$ are the same as the contractions $f \otimes_p f$ in [28] (cf. Remark 1.23), and the main theorems in that paper show that these contractions tend to 0 in L^2 if and only if the Wiener integrals $I_n^W(f_k)$ converge in law to a normal random variable, with variance $n!$ due to our normalization. This completes the proof. □

As an application, we prove a free analogue of the Breuer-Major theorem for stationary vectors. This classical theorem can be stated as follows.

Theorem (Breuer-Major Theorem). *Let $(X_k)_{k\in\mathbb{Z}}$ be a doubly-infinite sequence of standard normal random variables, and let $\rho(k) = \mathbb{E}(X_0X_k)$ denote the covariance function. Suppose there is an integer $n \geq 1$ such that $\sum_{k\in\mathbb{Z}} |\rho(k)|^n < \infty$. Let H_n denote the nth Hermite polynomial:*

$$H_n(x) = (-1)^n e^{x^2/2} \frac{d^n}{dx^n} e^{-x^2/2}.$$

($\{H_n : n \geq 0\}$ are the monic orthogonal polynomials associated to the law $N(0,1)$). Then the sequence

$$V_m = \frac{1}{\sqrt{m}} \sum_{k=0}^{m-1} H_n(X_k) \xrightarrow{\text{law}} N(0, n!\sigma^2) \ \text{ as } \ m \to \infty,$$

where $\sigma^2 = \sum_{k\in\mathbb{Z}} \rho(k)^n$.

See, for example, the preprint [24] for extensions and quantitative improvements of this theorem. Note that the Hermite polynomial H_n is related to Wiener integrals as follows: if $(W_t)_{t\geq 0}$ is a standard Brownian motion, then W_1 is a $N(0,1)$ variable, and

$$H_n(W_1) = I_n^W(\mathbb{1}_{[0,1]^n}).$$

(See, for example, [18].) The function $\mathbb{1}_{[0,1]^n}$ is fully symmetric. On the other hand, if $(S_t)_{t\geq 0}$ is a free Brownian motion, then

$$I_n^S(\mathbb{1}_{[0,1]^n}) = U_n(S_1)$$

where U_n is the nth Tchebyshev polynomial of the second kind, defined (on $[-2,2]$) by

$$U_n(2\cos\theta) = \frac{\sin((n+1)\theta)}{\sin\theta}. \tag{2.11}$$

($\{U_n : n \geq 0\}$ are the monic orthogonal polynomials associated to the law $S(0,1)$; see [8, 40].) Hence, the Wigner-Wiener transfer principle Theorem 1.8 immediately yields the following *free Breuer-Major theorem*.

Corollary 2.3. *Let $(X_k)_{k\in\mathbb{Z}}$ be a doubly-infinite sequence of semicircular random variables $S(0,1)$, and let $\rho(k) = \varphi(X_0X_k)$ denote the covariance function. Suppose there is an integer $n \geq 1$ such that $\sum_{k\in\mathbb{Z}} |\rho(k)|^n < \infty$. Then the sequence*

$$V_m = \frac{1}{\sqrt{m}} \sum_{k=0}^{m-1} U_n(X_k) \xrightarrow{\text{law}} S(0, \sigma^2) \ \text{ as } \ m \to \infty,$$

where $\sigma^2 = \sum_{k\in\mathbb{Z}} \rho(k)^n$.

3. Free Stochastic Calculus

In this section, we briefly outline the definitions and properties of the main players in the free Malliavin calculus. We closely follow [8]. The ideas that led to the development of stochastic analysis in this context can be traced back to [17]; [9] provides an important application to the theory of free entropy.

3.1. Abstract Wigner space.

As in Nualart's treatise [26], we first setup the constructs of the Malliavin calculus in an abstract setting, then specialize to the case of stochastic integrals. As discussed in section 1.2, the free Brownian motion is canonically constructed on the free Fock space $\mathscr{F}_0(\mathfrak{H})$ over a separable Hilbert space $\mathfrak{H}$. Refer to the algebra $\mathcal{S}(\mathfrak{H})$ (generated by the field variables $X(h)$ for $h \in \mathfrak{H}$), endowed with the vacuum expectation state φ, as an **abstract Wigner space**. While $\mathcal{S}(\mathfrak{H})$ consists of operators *on* $\mathscr{F}_0(\mathfrak{H})$, it can be identified as a subset of the Fock space due to the following fact.

Proposition 3.1. *The function*

$$\begin{aligned} \mathcal{S}(\mathfrak{H}) &\to \mathscr{F}_0(\mathfrak{H}) \\ Y &\mapsto Y\Omega \end{aligned} \tag{3.1}$$

is an injective isometry. It extends to an isometric isomorphism from the non-commutative L^2-space $L^2(\mathcal{S}(\mathfrak{H}), \varphi)$ onto $\mathscr{F}_0(\mathfrak{H})$.

In fact, the action of the map in Equation 3.1 can be explicitly written in terms of Tchebyshev polynomials (introduced in Equation 2.11). If $\{h_i\}_{i\in\mathbb{N}}$ is an orthonormal basis for $\mathfrak{H}$, $k_1, k_2, \ldots, k_r$ are indices with $k_j \neq k_{j+1}$ for $1 \leq j < r$, and $n_1, \ldots, n_r$ are positive integers, then

$$U_{n_1}(X(h_{k_1}))\cdots U_{n_r}(X(h_{k_r}))\Omega = h_{k_1}^{\otimes n_1} \otimes \cdots \otimes h_{k_r}^{\otimes n_r} \in \mathscr{F}_0(\mathfrak{H}). \tag{3.2}$$

(This is the precise analogue of the classical theorem with $X(\,\cdot\,)$ an isonormal Gaussian process and the U_n replaced by Hermite polynomials H_n; in the classical case the tensor products are all symmetric, hence the disjoint neighbours condition on the indices $k_1, \ldots, k_r$ is unnecessary.) Hence, in order to define a gradient operator (an analogue of the Cameron-Gross-Malliavin derivative) on the abstract Wigner space $\mathcal{S}(\mathfrak{H})$, we may begin by defining it on the Fock space $\mathscr{F}_0(\mathfrak{H})$.

3.2. **Derivations, the gradient operator, and the divergence operator.** In free probability, the notion of a derivative is replaced by a *free difference quotient*, which generalizes the following construction. Let $u\colon \mathbb{R} \to \mathbb{C}$ be a C^1 function. Then define a function $\partial u\colon \mathbb{R}\times\mathbb{R} \to \mathbb{C}$ by

$$\partial u(x,y) = \begin{cases} \dfrac{u(x)-u(y)}{x-y}, & x \neq y, \\ u'(x), & x = y. \end{cases} \tag{3.3}$$

The function ∂u is continuous on $\mathbb{R}^2$ since u is C^1. This operation is a *derivation* in the following sense (as the reader may readily verify): if $u, v \in C^1(\mathbb{R})$ then

$$\partial(uv)(x,y) = u(x)\partial v(x,y) + \partial u(x,y)v(y). \tag{3.4}$$

Hence, $\partial u \in L^2_{loc}(\mathbb{R}^2) \cong L^2_{loc}(\mathbb{R}) \otimes L^2_{loc}(\mathbb{R})$. In other words, we can think of ∂ as a map

$$\partial\colon C^1(\mathbb{R}) \to L^2_{loc}(\mathbb{R}) \otimes L^2_{loc}(\mathbb{R}). \tag{3.5}$$

If we restrict ∂ to polynomials $u \in \mathbb{C}[X]$ in a single indeterminate, then $\partial u \in \mathbb{C}[X,Y]$, polynomials in two (commuting) variables, and the same isomorphism yields $\mathbb{C}[X,Y] = \mathbb{C}[X] \otimes \mathbb{C}[X]$. The action of ∂ can be succinctly expressed here as

$$\begin{aligned} \partial\colon \mathbb{C}[X] &\to \mathbb{C}[X] \otimes \mathbb{C}[X] \\ X^n &\mapsto \sum_{j=1}^{n} X^{j-1} \otimes X^{n-j}. \end{aligned} \tag{3.6}$$

The operator ∂ is called the **canonical derivation**. In the context of Equation 3.6, the derivation property is properly expressed as follows:

$$\partial(AB) = (A \otimes 1)\cdot \partial B + \partial A \cdot (1 \otimes B). \tag{3.7}$$

It is not hard to check that ∂ is, up to scale, the unique such derivation which maps $\mathbb{C}[X]$ into $\mathbb{C}[X] \otimes \mathbb{C}[X]$ (i.e. the only derivations on $\mathbb{R}$ are multiples of the usual derivative). This uniqueness fails, of course, in higher dimensions.

Free difference quotients are non-commutative multivariate generalizations of this operator ∂ (acting, in particular, on non-commutative polynomials). The definition follows.

Definition 3.2. *Let $\mathscr{A}$ be a unital von Neumann algebra, and let $X \in \mathscr{A}$. The* **free difference quotient** *∂_X in the direction X is the unique derivation (cf. Equation 3.7) with the property that $\partial_X(X) = 1 \otimes 1$.*

(There is a more general notion of free difference quotients relative to a subalgebra, but we will not need it in the present paper.) Free difference quotients are central to the analysis of free entropy and free Fisher information (cf. [39, 38]). The operator ∂ plays the role of the derivative in the version of Itô's formula that holds for the stochastic integrals discussed below in Section 3.3, cf. [8, Proposition 4.3.2]. We will use ∂ and ∂_X, and their associated calculus (cf. [39]), in the calculations in Section 4.1. We mention them here to point out a counter-intuitive property of derivations in free probability: their range is a tensor-product space.

Returning to abstract Wigner space, we now proceed to define a free analogue of the Cameron-Gross-Malliavin derivative in this context; it will be modeled on the behaviour (and hence tensor-product range space) of the derivation ∂.

Definition 3.3. *The* **gradient operator** $\nabla\colon \mathscr{F}_0(\mathfrak{H}) \to \mathscr{F}_0(\mathfrak{H}) \otimes \mathfrak{H} \otimes \mathscr{F}_0(\mathfrak{H})$ *is densely-defined as follows:* $\nabla\Omega = 0$*, and for vectors* $h_1, \ldots, h_n \in \mathfrak{H}$*,*

$$\nabla(h_1 \otimes \cdots \otimes h_n) = \sum_{j=1}^{n} (h_1 \otimes \cdots \otimes h_{j-1}) \otimes h_j \otimes (h_{j+1} \otimes \cdots \otimes h_n), \tag{3.8}$$

where $h_1 \otimes \cdots \otimes h_{j-1} \equiv \Omega$ *when* $j = 1$ *and* $h_{j+1} \otimes \cdots \otimes h_n \equiv \Omega$ *when* $j = n$*. In particular,* $\nabla h = \Omega \otimes h \otimes \Omega$*.*

The **divergence operator** $\delta\colon \mathscr{F}_0(\mathfrak{H}) \otimes \mathfrak{H} \otimes \mathscr{F}_0(\mathfrak{H}) \to \mathscr{F}_0(\mathfrak{H})$ *is densely defined as follows: if* $h_1, \ldots, h_n$ *and* $g_1, \ldots, g_m$ *and* h *are in* $\mathfrak{H}$ *then*

$$\delta\left((h_1 \otimes \cdots \otimes h_n) \otimes h \otimes (g_1 \otimes \cdots \otimes g_m)\right) = h_1 \otimes \cdots \otimes h_n \otimes h \otimes g_1 \otimes \cdots \otimes g_m. \tag{3.9}$$

These actions, on first glance, look trivial; the important point is the range of ∇ and the domain of δ are tensor products, and so the placement of the parentheses in Equations 3.8 and 3.9 is very important. When we reinterpret ∇, δ in terms of their action on stochastic integrals, they will seem more natural and familiar.

The operator $N_0 \equiv \delta\nabla\colon \mathscr{F}_0(\mathfrak{H}) \to \mathscr{F}_0(\mathfrak{H})$ is the **free Ornstein-Uhlenbeck operator** or **free number operator**, cf. [5]. Its action on an n-tensor is given by $N_0(h_1 \otimes \cdots \otimes h_n) = n\, h_1 \otimes \cdots \otimes h_n$. In particular, the free Ornstein-Uhlenbeck operator, densely-defined on its natural domain, is invertible on the orthogonal complement of the vacuum vector. This will be important in Section 4. It is easy to describe the domains $\mathscr{D}(N_0)$ and $\mathscr{D}(N_0^{-1})$; we will delay these descriptions until Section 3.6.

Definition 3.3 defines ∇, δ on domains involving the algebraic Fock space $\mathscr{F}_{\text{alg}}(\mathfrak{H})$ (consisting of finitely-terminating sums of tensor products of vectors in $\mathfrak{H}$). It is then straightforward to show that they are closable operators, adjoint to each other. The preimage of $\mathscr{F}_{\text{alg}}(\mathfrak{H})$ under the isomorphism of Equation 3.1 is actually contained in $\mathcal{S}(\mathfrak{H})$: Equation 3.2 shows that it consists of non-commutative polynomials in variables $\{X(h), h \in \mathfrak{H}\}$. Denote this space as $\mathcal{S}_{\text{alg}}(\mathfrak{H})$. We will concern ourselves primarily with the actions of ∇, δ on this polynomial algebra (as is typical in the classical setting as well). Note, we actually identify $\mathcal{S}_{\text{alg}}(\mathfrak{H})$ as a subset of $\mathscr{F}(\mathfrak{H})$ via Proposition 3.1, therefore using the same symbols ∇, δ for the conjugated actions of these Fock space operators. Under this isomorphism, the full domain $\mathscr{D}(\nabla)$ is the closure of $\mathcal{S}_{\text{alg}}(\mathfrak{H})$; similarly, $\mathscr{D}(N_0)$ and $\mathscr{D}(N_0^{-1})$ have $\mathcal{S}_{\text{alg}}(\mathfrak{H})$ (minus constants in the latter case) as a core.

Proposition 3.4. *The gradient operator* $\nabla\colon \mathcal{S}_{\text{alg}}(\mathfrak{H}) \to \mathcal{S}_{\text{alg}}(\mathfrak{H}) \otimes \mathfrak{H} \otimes \mathcal{S}_{\text{alg}}(\mathfrak{H})$ *is a derivation:*

$$\nabla(AB) = A \cdot (\nabla B) + (\nabla A) \cdot B \qquad A, B \in \mathcal{S}_{\text{alg}}(\mathfrak{H}). \tag{3.10}$$

In Equation 3.10, the left and right actions of $\mathcal{S}_{\text{alg}}(\mathfrak{H})$ are the obvious ones $A \cdot (U \otimes h \otimes V) = (AU) \otimes h \otimes V$ and $(U \otimes h \otimes V) \cdot B = U \otimes h \otimes (VB)$. This is the same derivation property as in Equation 3.7. In particular, iterating Equation 3.10 yields the formula

$$\nabla\left(X(h_1) \cdots X(h_n)\right) = \sum_{j=1}^{n} X(h_1) \cdots X(h_{j-1}) \otimes h_j \otimes X(h_{j+1}) \cdots X(h_n). \tag{3.11}$$

When $n = 1$, Equation 3.11 says $\nabla X(h) = 1 \otimes h \otimes 1$, which matches the classical gradient operator (up to the additional tensor product with 1).

As shown in [8], both operators ∇ and δ are densely defined and closable operators, both with respect to the $L^2(\varphi)$ (or $L^2(\varphi \otimes \varphi)$) topology and the weak operator topology. It is most convenient to work with them on the dense domains given in terms of $\mathcal{S}_{\text{alg}}$.

We now state the standard integration by parts formula. First, we need an appropriate pairing between the range of ∇ and $\mathfrak{H}$, which is given by the linear extension of the following.

$$\begin{aligned} \langle \cdot, \cdot \rangle_{\mathfrak{H}} \colon \ & (\mathcal{S}_{\text{alg}}(\mathfrak{H}) \otimes \mathfrak{H} \otimes \mathcal{S}_{\text{alg}}(\mathfrak{H})) \times \mathfrak{H} \to \mathcal{S}_{\text{alg}}(\mathfrak{H}) \otimes \mathcal{S}_{\text{alg}}(\mathfrak{H}) \\ & \langle A \otimes h_1 \otimes B, h_2 \rangle_{\mathfrak{H}} = \langle h_1, h_2 \rangle \, A \otimes B. \end{aligned} \tag{3.12}$$

In the special case $\mathfrak{H} = L^2(\mathbb{R}_+)$ to which we soon restrict, this pairing is quite natural; see Equation 3.17 below. The next proposition appears as [8, Lemma 5.2.2].

Proposition 3.5 (Biane, Speicher). *If $Y \in \mathcal{S}_{\text{alg}}(\mathfrak{H})$ and $h \in \mathfrak{H}$,*

$$\varphi \otimes \varphi \left(\langle \nabla Y, h \rangle_{\mathfrak{H}} \right) = \varphi \left(Y \cdot X(h) \right). \tag{3.13}$$

Remark 3.6. Since $\langle \nabla Y, h \rangle_{\mathfrak{H}}$ is in the tensor product $\mathcal{S}_{\text{alg}}(\mathfrak{H}) \otimes \mathcal{S}_{\text{alg}}(\mathfrak{H})$, its expectation must be taken with respect to the product measure $\varphi \otimes \varphi$.

3.3. **Free stochastic integration and biprocesses.** We now specialize to the case $\mathfrak{H} = L^2(\mathbb{R}_+)$. In this setting, we have already well-studied the field variables $X(h)$:

$$X(h) = I_1^S(h) = \int h(t) \, dS_t. \tag{3.14}$$

(Equation 3.14 follows easly from the construction $S_t = X(\mathbb{1}_{[0,t]})$ of free Brownian motion.) To improve readability, we refer to the polynomial algebra $\mathcal{S}_{\text{alg}}(L^2(\mathbb{R}_+))$ simply as $\mathcal{S}_{\text{alg}}$; therefore, since $S_t = X(\mathbb{1}_{[0,t]})$, $\mathcal{S}_{\text{alg}}$ contains all (non-commutative) polynomial functions of free Brownian motion. The gradient ∇ maps $\mathcal{S}_{\text{alg}}$ into $\mathcal{S}_{\text{alg}} \otimes L^2(\mathbb{R}_+) \otimes \mathcal{S}_{\text{alg}}$. It is convenient to identify the range space in the canonical way with vector-valued L^2-functions:

$$\mathcal{S}_{\text{alg}} \otimes L^2(\mathbb{R}_+) \otimes \mathcal{S}_{\text{alg}} \cong L^2 \left(\mathbb{R}_+ ; \mathcal{S}_{\text{alg}} \otimes \mathcal{S}_{\text{alg}} \right).$$

That is, for $Y \in \mathcal{S}_{\text{alg}}$, we may think of ∇Y as a function. As usual, for $t \geq 0$, denote $(\nabla Y)(t) = \nabla_t Y$. Thus, ∇Y is a non-commutative stochastic process taking values in the tensor product $\mathcal{S}_{\text{alg}} \otimes \mathcal{S}_{\text{alg}}$.

Definition 3.7. *Let $(\mathscr{A}, \varphi)$ be a W^*-probability space. A* **biprocess** *is a stochastic process $t \mapsto U_t \in \mathscr{A} \otimes \mathscr{A}$. For $1 \leq p \leq \infty$, say U is an L^p* **biprocess**, *$U \in \mathscr{B}_p$, if the norm*

$$\|U\|_{\mathscr{B}_p}^2 = \int_0^\infty \|U_t\|_{L^p(\mathscr{A} \otimes \mathscr{A}, \varphi \otimes \varphi)}^2 \, dt \tag{3.15}$$

is finite. (When $p = \infty$ the inside norm is just the operator norm of U_t in $\mathscr{A} \otimes \mathscr{A}$.)

Let $\{\mathscr{A}_t : t \geq 0\}$ be a filtration of subalgebras of $\mathscr{A}$; say that U is **adapted** *if $U_t \in \mathscr{A}_t \otimes \mathscr{A}_t$ for all $t \geq 0$.*

A biprocess is called **simple** *if it is of the form*

$$U = \sum_{j=1}^n A_j \otimes B_j \mathbb{1}_{[t_{j-1}, t_j)} \tag{3.16}$$

where $0 = t_0 < t_1 < \cdots < t_n$ and A_j, B_j are in the algebra $\mathscr{A}$. The simple biprocess in Equation 3.16 is adapted if and only if $A_j, B_j \in \mathscr{A}_{t_{j-1}}$ for $1 \leq j \leq n$. The closure of the space of simple biprocesses in $\mathscr{B}_p$ is denoted $\mathscr{B}_p^a$, the space of L^p **adapted biprocesses**.

Remark 3.8. Customarily, our algebra $\mathscr{A}$ will contain a free Brownian motion $S = (S_t)_{t \geq 0}$, and we will consider only filtrations $\mathscr{A}_t$ such that $S_s \in \mathscr{A}_t$ for $s \leq t$. Thus, when we say a process or biprocess is adapted, we typically mean with respect to the free Brownian filtration.

So, if $Y \in \mathcal{S}_{\mathrm{alg}}$ then ∇Y is a biprocess. Since $\mathcal{S}_{\mathrm{alg}}$ consists of polynomials in free Brownian motion, it is not too hard to see that $\nabla Y \in \mathscr{B}_p$ for any $p \geq 1$ (cf. [8, Proposition 5.2.3]). Note that the pairing of Equation 3.12, in the case $\mathfrak{H} = L^2(\mathbb{R}_+)$, amounts to the following. If $U \in \mathscr{B}_2$ is an L^2 biprocess and $h \in L^2(\mathbb{R}_+)$, then

$$\langle U, h \rangle_{L^2(\mathbb{R}_+)} = \int_{\mathbb{R}_+} U_t \, \overline{h(t)} \, dt. \tag{3.17}$$

We now describe a generalization of the Wigner integral $\int h(t)\, dS_t$ to allow "random" integrands; moreover, we will allow integrands that are not only processes but *biprocesses*. (If X_t is a process then $X_t \otimes 1$ is a biprocess, so we develop the theory only for biprocesses.)

Definition 3.9. *Let $U = \sum_{j=1}^n A_j \otimes B_j \mathbb{1}_{[t_{j-1}, t_j)}$ be a simple biprocess, and let $S = (S_t)_{t \geq 0}$ be a free Brownian motion. The* **stochastic integral** *of U with respect to S is defined to be*

$$\int U_t \sharp \, dS_t = \sum_{j=1}^n A_j (S_{t_j} - S_{t_{j-1}}) B_j. \tag{3.18}$$

Remark 3.10. The $\sharp$-sign is used to denote the action of U_t on both the left and the right of the Brownian increment. In general, we use it to denote the action of $\mathscr{A} \otimes \mathscr{A}$ on $\mathscr{A}$ by $(A \otimes B) \sharp C = ACB$; more generally, for any vector space $\mathscr{X}$, it denotes the action of $\mathscr{A} \otimes \mathscr{A}$ on $\mathscr{A} \otimes \mathscr{X} \otimes \mathscr{A}$ by $(A \otimes B) \sharp (C \otimes X \otimes D) = (AC) \otimes X \otimes (DB)$. Since the second tensor factor of $\mathscr{A}$ acts on the right rather than the left, it might be more accurate to describe $\sharp$ as an action of $\mathscr{A} \otimes \mathscr{A}^{\mathrm{op}}$, where the *opposite algebra* $\mathscr{A}^{\mathrm{op}}$ is equal to $\mathscr{A}$ as a set but has the reversed product.

Remark 3.11. Let U be a simple biprocess as in Equation 3.16. If A_j are constant multiples of the identity and $B_j = 1$ then the stochastic integral in Definition 3.9 reduces to the Wigner integral: $\int U_t \sharp \, dS_t = I_1^S(h)$ where $h = \sum_{j=1}^n A_j \mathbb{1}_{[t_{j-1}, t_j)}$.

Let U be an adapted simple biprocess. A standard calculation, utilizing the freeness of the increments of $(S_t)_{t \geq 0}$, yields the general *Wigner-Itô isometry*

$$\left\| \int U_t \sharp \, dS_t \right\|_{L^2(\mathscr{A}, \varphi)} = \|U\|_{\mathscr{B}_2}. \tag{3.19}$$

This isometry therefore extends the definition of the stochastic integral to all of $\mathscr{B}_2^a$ by a density argument (since simple biprocesses are dense in $\mathscr{B}_2^a$).

3.4. **An Itô formula.** There is a rich theory of free stochastic differential equations based on the stochastic integral of Definition 3.9, cf. [11, 12, 13] which mirror classical processes (like the Ornstein-Uhlenbeck process) in the free world, and [14] which uses free SDEs for an important application to random matrix ensembles and operator algebras. The stochastic calculus in this context is based on a free version of the Itô formula, [8, Proposition 4.3.4]. It involves the derivation ∂ in place of the first order term; in order to describe the appropriate Itô correction term, we need the following definition.

Definition 3.12. *Let μ be a probability measure on $\mathbb{R}$ all of whose moments are finite. Define the operator $\Delta_\mu \colon \mathbb{C}[X] \to \mathbb{C}[X]$ on polynomials as follows:*

$$\Delta_\mu h(x) = 2 \frac{d}{dx} \int_{\mathbb{R}} \partial h(x, y) \, \mu(dy). \tag{3.20}$$

The Itô formula in our context applies to Itô processes of the form $M_t = M_0 + \int_0^t U_s \sharp \, dS_s + \int_0^t K_s \, ds$. For our purposes, it suffices to take $U_s = \mathbb{1}_{[0,t]} 1 \otimes 1$ so that the stochastic integral $\int U_s \sharp \, dS_s$ is just the free Brownian motion S_t, and so we state the formula only in in this special case.

Proposition 3.13 (Biane, Speicher)**.** *Let $K = (K_t)_{t \geq 0}$ be a self-adjoint adapted process. Let M_0 be self adjoint in $L^2(\mathcal{S}, \varphi)$, and let $M = (M_t)_{t \geq 0}$ be a process of the form*

$$M_t = M_0 + S_t + \int_0^t K_s \, ds. \tag{3.21}$$

Let $h \in \mathbb{C}[X]$ be a polynomial, and let Δ_t denote the operator $\Delta_t = \Delta_{\mu_{M_t}}$ (cf. Equation 3.20). Then

$$h(M_t) = h(M_0) + \int_0^t \partial h(M_s) \sharp \, dM_s + \frac{1}{2} \int_0^t \Delta_s h(M_s) \, ds. \tag{3.22}$$

Remark 3.14. In Equation 3.22, we are viewing the function ∂h as living in $\mathbb{C}[X] \otimes \mathbb{C}[X]$ directly rather than $\mathbb{C}[X, Y]$. In particular, if $h(x) = x^n$ then $\partial h(X) = \sum_{k=1}^n X^{k-1} \otimes X^{n-k}$.

Remark 3.15. Of course, given Equation 3.21 defining M_t, the integral $\int_0^t \partial h(M_s) \sharp \, dM_s$ in Equation 3.22 is shorthand for

$$\int_0^t \partial h(M_s) \sharp \, dM_s = \int_0^t \partial h(M_s) \sharp \, dS_s + \int_0^t \partial h(M_s) \sharp \, K_s \, ds,$$

following standard conventions of stochastic calculus.

We will use Proposition 3.13 in the calculations in Section 4.1 below. It will be convenient to extend the Itô formula beyond polynomial functions h for this purpose. The canonical derivation ∂ of Equation 3.4 makes sense for any C^1-function h; we restrict this domain slightly as follows. Suppose that h is the Fourier transform of a complex measure ν on $\mathbb{R}$,

$$h(x) = \widehat{\nu}(x) = \int_{\mathbb{R}} e^{ix\xi} \, \nu(d\xi). \tag{3.23}$$

By definition a complex measure is finite, and so such functions h are continuous and bounded, $h \in C_b(\mathbb{R})$. In order to fit into the Itô framework, such functions must be L^2 in the appropriate sense. In the context of Equation 3.23, the relevant normalization is as follows.

Definition 3.16. *Let h have a Fourier expansion as in Equation 3.23. Define a seminorm $\mathscr{I}_2(h)$ on such functions h by*

$$\mathscr{I}_2(h) = \int_{\mathbb{R}} \xi^2 \, |\nu|(d\xi). \tag{3.24}$$

Denote by $\mathcal{C}_2$ the set of functions h with $\mathscr{I}_2(h) < \infty$.

Remark 3.17. $\mathscr{I}_2$ is not a norm: if $h = a \in \mathbb{C}$ is a constant function, then $h = \widehat{a\delta_0}$, and $\mathscr{I}_2(h) = \int \xi^2 |a| \delta_0(d\xi) = 0$. It is easy to check that $\mathscr{I}_2$ is a seminorm (i.e. non-negative and satisfies the triangle inequality), and that its kernel consists exactly of constant functions in $\mathcal{C}_2$. Indeed, the quotient of $\mathcal{C}_2$ by constants is a Banach space in the descended $\mathscr{I}_2$-norm.

Standard Fourier analysis shows that $\mathcal{C}_2 \subset C_b^2(\mathbb{R})$ (bounded twice-continuously-differentiable functions), where $\mathscr{I}_2(h)$ is like a sup-norm on the second derivative h''. In particular, non-constant polynomials are not in $\mathcal{C}_2$. For our purposes, we are only concerned with applying polynomials to bounded operators, meaning that we only care about their action on a compact subset of $\mathbb{R}$. In fact, locally any C^∞ function is in $\mathcal{C}_2$.

Lemma 3.18. *Let $r > 0$. Given any C^∞ function $h \colon \mathbb{R} \to \mathbb{C}$, there is a function $h_r \in \mathcal{C}_2$ such that $h(x) = h_r(x)$ for $|x| \leq r$.*

Proof. Let ψ_r be a C_c^∞ function such that $\psi_r(x) = 1$ for $|x| \leq r$. Then $\psi_r h$ is equal to h on $[-r, r]$. This function is C_c^∞, and hence its inverse Fourier transform $(\psi_r h)^\vee$ is in the Schwartz space of rapidly-decaying smooth functions. Set $\nu_r(d\xi) = (\psi_r h)^\vee(\xi) \, d\xi$; then ν_r has finite absolute moments of all orders, and $h_r \equiv \widehat{\nu_r} = \psi_r h$ is in $\mathcal{C}_2$ and is equal to h on $[-r, r]$. □

In particular, polynomials are locally in the class $\mathcal{C}_2$. Later we will need the following result which says that resolvent functions are globally in $\mathcal{C}_2$.

Lemma 3.19. *For any fixed z in the upper half-plane $\mathbb{C}_+$, the function $\rho_z(x) = \frac{1}{z-x}$ is in $\mathcal{C}_2$.*

Proof. The resolvent ρ_z is the Fourier transform of the measure $\nu_z(d\xi) = -ie^{-iz\xi} \mathbb{1}_{(-\infty,0]}(\xi) \, d\xi$; a simple calculation shows that $\mathscr{I}_2(\rho_z) = 2(\Im z)^{-3}$ when $\Im z > 0$. □

The next theorem is a technical approximation tool which will greatly simplify some of the more intricate calculations in Section 4.1.

Theorem 3.20. *Let K be a compact interval in $\mathbb{R}$. Denote by $\mathcal{C}_2^{K,P}$ the subset of $\mathcal{C}_2$ consisting of those functions in $\mathcal{C}_2$ that are equal to polynomials on K. If $h \in \mathcal{C}_2$, there is a sequence $h_n \in \mathcal{C}_2^{K,P}$ such that*

(1) *$\mathscr{I}_2(h_n) \to \mathscr{I}_2(h)$ as $n \to \infty$, and*
(2) *If μ is any probability measure supported in K then $\int h_n \, d\mu \to \int h \, d\mu$.*

In fact, our proof will actually construct such a sequence h_n that converges to h pointwise as well, although this is not necessary for our intended applications. The proof of Theorem 3.20 is quite technical, and is delayed to Appendix A.

Since $\mathcal{C}_2 \subset C^2(\mathbb{R})$, the operator ∂ makes perfect sense on $\mathcal{C}_2$ (and has L^2-norm appropriately controlled); we can then reinterpret the function $\partial h \in C^1(\mathbb{R}^2)$ as an element of $L^2_{loc}(\mathbb{R}) \otimes L^2_{loc}(\mathbb{R})$ so it fits the notation of the Itô formula Equation 3.22. It will be useful to have a more tensor-explicit representation of the function ∂h for $h \in \mathcal{C}_2$ in the sequel. If $h = \widehat{\nu}$, then

$$\partial h(x,y) = \frac{h(x) - h(y)}{x - y} = \int_0^1 h'(\alpha x + (1-\alpha)y) \, d\alpha = \int_0^1 \int_{\mathbb{R}} i\xi e^{i\alpha\xi x} e^{i(1-\alpha)\xi y} \, \nu(d\xi) \, d\alpha. \tag{3.25}$$

Under the standard tensor identification, we can rewrite Equation 3.25 as

$$\partial h(Y) = \int_0^1 \int_{\mathbb{R}} i\xi (e^{i\alpha\xi Y} \otimes e^{i(1-\alpha)\xi Y}) \, \nu(d\xi) \, d\alpha. \tag{3.26}$$

As for the Itô correction term in Equation 3.22, two applications of the Dominated Convergence Theorem show that the operator Δ_μ of Definition 3.12 is well defined on $h \in \mathcal{C}_2$ whenever μ is compactly-supported, and the resulting function $\Delta_\mu h$ is continuous. As such, all the terms in the Itô formula Equation 3.22 are well defined for $h \in \mathcal{C}_2$, and standard approximations show that

Corollary 3.21. *The Itô formula of Equation 3.22 holds for $h \in \mathcal{C}_2$.*

Remark 3.22. The evaluations of the functions h, ∂h, and $\Delta_t h$ on the non-commutative random variables M_0 and M_t are given sense through functional calculus; this is possible (and routine) because M_0 and M_t are self-adjoint.

3.5. **Chaos expansion for biprocesses.** Recall the multiple Wigner integrals I_n^S as discussed in Section 1.3. By de-emphasizing the explicit dependence on n, I^S can then act (linearly) on finite sums $\sum_n f_n$ of functions $f_n \in L^2(\mathbb{R}_+^n) \cong L^2(\mathbb{R}_+)^{\otimes n}$; i.e. I^S acts on the algebraic Fock space $\mathcal{F}_{\text{alg}} = \mathscr{F}_{\text{alg}}(L^2(\mathbb{R}_+))$. Utilizing the Wigner isometry Equation 1.5, this means I^S extends to a map defined on the Fock space,

$$I^S \colon \mathscr{F}_0 \to L^2(\mathcal{S}, \varphi); \tag{3.27}$$

here and in the sequel, $\mathscr{F}_0 = \mathscr{F}_0(L^2(\mathbb{R}_+))$ and $\mathcal{S} = \mathcal{S}(L^2(\mathbb{R}_+))$. In fact, the map in Equation 3.27 is an isometric isomorphism; this is one way to state the Wigner chaos decomposition. This extended map I^S is the inverse of the map $Y \mapsto Y\Omega$ of Proposition 3.1.

For n, m positive integers, define for $f \in L^2(\mathbb{R}_+^n) \otimes L^2(\mathbb{R}_+^m) \cong L^2(\mathbb{R}_+^{n+m})$ the **Wigner bi-integral**

$$\left[I_n^S \otimes I_m^S\right](f) = \int f(t_1, \ldots, t_n; s_1, \ldots, s_m) \, dS_{t_1} \cdots dS_{t_n} \otimes dS_{s_1} \cdots dS_{s_m}. \tag{3.28}$$

To be clear: if $f = g \otimes h$ with $g \in L^2(\mathbb{R}_+^n)$ and $h \in L^2(\mathbb{R}_+^m)$ then $\left[I_n^S \otimes I_m^S\right](f) = I_n^S(g) \otimes I_m^S(h)$; in general, $I_n^S \otimes I_m^S$ is the L^2-closed linear extension of this action. Thus,

$$I_n^S \otimes I_m^S \colon L^2(\mathbb{R}_+^n) \otimes L^2(\mathbb{R}_+^m) \to L^2(\mathcal{S} \otimes \mathcal{S}, \varphi \otimes \varphi).$$

The Wigner isometry (cf. Equation 1.5) in this context then says that if $f \in L^2(\mathbb{R}_+^n) \otimes L^2(\mathbb{R}_+^m)$ and $g \in L^2(\mathbb{R}_+^{n'}) \otimes L^2(\mathbb{R}_+^{m'})$ then

$$\varphi \otimes \varphi \left(\left[I_{n'}^S \otimes I_{m'}^S\right](g)^* \left[I_n^S \otimes I_m^S\right](f) \right) = \begin{cases} \langle f, g \rangle_{L^2(\mathbb{R}_+^n) \otimes L^2(\mathbb{R}_+^m)}, & \text{if } n = n' \text{ and } m = m', \\ 0, & \text{otherwise.} \end{cases} \tag{3.29}$$

This "bisometry" allows us to put the $I_n^S \otimes I_m^S$ together for different n, m as in Equation 3.27, to yield an isometric isomorphism

$$I^S \otimes I^S \colon \mathscr{F}_0 \otimes \mathscr{F}_0 \to L^2(\mathcal{S} \otimes \mathcal{S}, \varphi \otimes \varphi). \tag{3.30}$$

What's more, by taking these Hilbert spaces as the ranges of vector-valued $L^2(\mathbb{R}_+)$-functions, and utilizing the isomorphism $L^2(\mathbb{R}_+; \mathfrak{A} \otimes \mathfrak{B}) \cong \mathfrak{A} \otimes L^2(\mathbb{R}_+) \otimes \mathfrak{B}$ for given Hilbert spaces $\mathfrak{A}, \mathfrak{B}$, we have an isometric isomorphism

$$I^S \otimes I^S \colon L^2\left(\mathbb{R}_+ \,;\, \mathscr{F}_0 \otimes \mathscr{F}_0\right) \to \mathscr{B}_2. \tag{3.31}$$

Here $\mathscr{B}_2$ denotes the L^2 biprocesses (cf. Definition 3.7), in this case taking values in $\mathcal{S} \otimes \mathcal{S}$. If $f \in L^2\left(\mathbb{R}_+ \,;\, \mathscr{F}_0 \otimes \mathscr{F}_0\right)$, the bi-integral acts only on components: $\left[I^S \otimes I^S\right](f)\,(t) = \left[I^S \otimes I^S\right](f_t)$. Equation 3.31 (through the action defined in Equation 3.28) is the **Wigner chaos expansion for L^2 biprocesses** in the Wigner space.

As in the classical case, adaptedness is easily understood in terms of the chaos expansion. If $U \in \mathscr{B}_2$, it has a chaos expansion $U = [I^S \otimes I^S](f)$ for some $f \in L^2(\mathbb{R}_+ \,;\, \mathscr{F}_0 \otimes \mathscr{F}_0)$, which we may write as an orthogonal sum

$$f \colon t \mapsto f_t = \sum_{n,m=0}^{\infty} f_t^{n,m}$$

where $f_t^{n,m} \in L^2(\mathbb{R}_+^n) \otimes L^2(\mathbb{R}_+^m)$. Then U is adapted (in the sense of Definition 3.7) if and only if for each n, m and $t_1, \ldots, t_n, s_1, \ldots, s_m \geq 0$, the kernels $f_t^{n,m}(t_1, \ldots, t_n; s_1, \ldots, s_m)$ are adapted, meaning they are 0 whenever $\max\{t_1, \ldots, t_n, s_1, \ldots, s_m\} > t$. In this case, the stochastic integral defined in Equations 3.18 and 3.19 can be succinctly expressed, cf. [8, Proposition 5.3.7]. In particular, if $f^{n,m} \in L^2(\mathbb{R}_+ \,;\, L^2(\mathbb{R}_+^n) \otimes L^2(\mathbb{R}_+^m))$ is adapted, then

$$\int [I^S \otimes I^S](f_t) \sharp\, dS_t = \int f_t^{n,m}(t_1, \ldots, t_n; s_1, \ldots, s_m)\, dS_{t_1} \cdots dS_{t_n} dS_t dS_{s_1} \cdots dS_{s_m}. \tag{3.32}$$

This is consistent with the notation of Equation 3.28; informally, it says that

$$(dS_{t_1} \cdots dS_{t_n} \otimes dS_{s_1} \cdots dS_{s_m}) \sharp\, dS_t = dS_{t_n} \cdots dS_{t_1} dS_t dS_{s_1} \cdots dS_{s_m}$$

as one would expect.

3.6. **Gradient and divergence revisited.** Both the gradient and the divergence have simple representations in terms of the chaos expansions in Section 3.5.

Proposition 3.23 (Propositions 5.3.9 & 5.3.10 in [8])**.** *The gradient operator is densely-defined and closable in*

$$\nabla \colon L^2(\mathcal{S}, \varphi) \to \mathscr{B}_2.$$

Its domain $\mathscr{D}(\nabla)$, expressed in terms of the chaos expansion for $L^2(\mathcal{S}, \varphi)$, is as follows. If $f = \sum_n f_n \in \mathscr{F}_0$ with $f_n \in L^2(\mathbb{R}_+^n)$, and if $L^2(\mathcal{S}, \varphi) \ni Y = I^S(f)$, then $Y \in \mathscr{D}(\nabla)$ if and only if

$$\sum_{n=0}^{\infty} n \|f_n\|^2_{L^2(\mathbb{R}_+^n)} < \infty. \tag{3.33}$$

In this case, the quantity in Equation 3.33 is equal to the norm

$$\int_{\mathbb{R}_+} \|\nabla_t Y\|^2_{L^2(\mathcal{S} \otimes \mathcal{S}, \varphi \otimes \varphi)}\, dt = \sum_{n=0}^{\infty} n \|f_n\|^2_{L^2(\mathbb{R}_+^n)}.$$

Moreover, the action of ∇ on this domain is determined by

$$\begin{aligned} &\nabla_t \left(\int f(t_1, \ldots, t_n)\, dS_{t_1} \cdots dS_{t_n} \right) \\ &\quad = \sum_{k=1}^{n} \int f(t_1, \ldots, t_{k-1}, t, t_{k+1}, \ldots, t_n)\, dS_{t_1} \cdots dS_{t_{k-1}} \otimes dS_{t_{k+1}} \cdots dS_{t_n}. \end{aligned} \tag{3.34}$$

Remark 3.24. It is similarly straightforward to write the domain of the free Ornstein-Uhlenbeck operator in terms of Wigner chaos expansions. If $Y = I^S(f)$ where $f = \sum_n f_n \in \mathscr{F}_0$, then $Y \in \mathscr{D}(N_0)$ iff $\sum_n n^2 \|f_n\|^2_{L^2(\mathbb{R}^n_+)} < \infty$. Likewise, $Y \in \mathscr{D}(N_0^{-1})$ iff $f_0 = 0$ and $\sum_{n>0} n^{-2} \|f_n\|^2_{L^2(\mathbb{R}^n_+)} < \infty$. In particular, we see that

$$\mathscr{D}(N_0) \subset \mathscr{D}(\nabla), \quad \mathscr{D}(\nabla) \ominus \operatorname{image}(I_0^S) \subset \mathscr{D}(N_0^{-1}). \tag{3.35}$$

The divergence operator can also be simply described in terms of the chaos. We could similarly describe its domain, but its action on adapted processes is already well-known, as in the classical case.

Proposition 3.25 (Propositions 5.3.9 & 5.3.11 in [8])**.** *The divergence operator is densely-defined and closable in*

$$\delta \colon \mathscr{B}_2 \to L^2(\mathcal{S}, \varphi).$$

Using the chaos expansion for biprocesses, the action of δ is determined as follows. If $f \in L^2(\mathbb{R}_+\,;\, L^2(\mathbb{R}^n_+) \otimes L^2(\mathbb{R}^m_+))$, then

$$\begin{aligned} &\delta\left(\int f_t(t_1, \ldots, t_n; s_1, \ldots, s_m)\, dS_{t_1} \cdots dS_{t_m} \otimes dS_{s_1} \cdots dS_{s_m}\right) \\ &\quad = \int f_t(t_1, \ldots, t_n; s_1, \ldots, t_m)\, dS_{t_1} \cdots dS_{t_n} dS_t dS_{s_1} \cdots dS_{s_m}. \end{aligned} \tag{3.36}$$

In particular, comparing with Equation 3.32, if U is an adapted biprocess $U \in \mathscr{B}_2^a$ then $U \in \mathscr{D}(\delta)$ and

$$\delta(U) = \int U_t \sharp\, dS_t.$$

Remark 3.26. In light of the second part of Proposition 3.25, the divergence operator is also called the **free Skorohod integral**. To be more precise: as in the classical case, there is a domain $\mathbb{L}^{1,2}$ in between $\mathscr{B}_2^a$ and the natural domain $\mathscr{D}(\delta)$ on which δ is closable and such that for $U \in \mathbb{L}^{1,2}$ the relation $\nabla_t(\delta(U)) = U_t + \delta_s(\nabla_t U_s)$ holds true. It is this restriction of δ that is properly called the Skorohod integral.

Remark 3.27. Given a random variable $X \in \mathscr{D}(\nabla)$, using the derivation properties of the operators ∂_X (cf. Definition 3.2) and ∇, it is relatively easy to derive the following chain rule. If $p \in \mathbb{C}[X]$ is a polynomial, then

$$\nabla p(X) = \partial_X p(X) \sharp\, \nabla X. \tag{3.37}$$

We conclude this section with one final result. The space of L^2 adapted biprocesses $\mathscr{B}_2^a$ is a closed subspace of the Hilbert space $\mathscr{B}_2$ (cf. Definition 3.7). Hence there is an orthogonal projection $\Gamma \colon \mathscr{B}_2 \to \mathscr{B}_2^a$. The next result is a free version of the Clark-Ocone formula. It can be found as [8, Proposition 5.3.12].

Proposition 3.28. *If $X \in \mathscr{D}(\nabla)$, then*

$$X = \varphi(X) + \delta(\Gamma \nabla X).$$

4. Quantitative Bounds on the Distance to the Semicircular Distribution

As described in the restricted form of Theorem 1.10 in Section 1, we are primarily concerned in this section with quantitative estimates for the following distance function on probability distributions.

Definition 4.1. *Given two self-adjoint random variables X, Y, define the distance*

$$d_{\mathcal{C}_2}(X, Y) = \sup\{|\varphi[h(X)] - \varphi[h(Y)]| \,:\, h \in \mathcal{C}_2,\ \mathscr{I}_2(h) \leq 1\};$$

the class $\mathcal{C}_2$ and the seminorm $\mathscr{I}_2$ are discussed in Definition 3.16.

Remark 4.2. Note that we could write the definition of $d_{\mathscr{C}_2}(X,Y)$ equally well as

$$\sup\left\{\left|\int h\,d\mu_X - \int h\,d\mu_Y\right| \,:\, h\in\mathcal{C}_2,\ \mathscr{I}_2(h)\le 1\right\}.$$

In this form, it is apparent that $d_{\mathcal{C}_2}(X,Y)$ only depends on the laws μ_X and μ_Y of the random variables X and Y. In computing it, we are therefore free to make any simplifying assumption about the correlations of X and Y that are convenient; for example, we may assume that X and Y are freely independent.

Lemma 3.19 shows that resolvent functions $\rho_z(x)=(z-x)^{-1}$ are in $\mathcal{C}_2$ for $z\in\mathbb{C}_+$, and in fact that if $\Im z=1$ then $\mathscr{I}_2(\rho_z)=2$. Thus,

$$d_{\mathcal{C}_2}(X,Y)\ge\frac{1}{2}\sup_{\Im z=1}\left|\varphi[(z-X)^{-1}]-\varphi[(z-Y)^{-1}]\right| = \frac{1}{2}\sup_{\Im z=1}|G_{\mu_X}(z)-G_{\mu_Y}(z)|,$$

where $G_\mu(z)=\int_{\mathbb{R}}(z-x)^{-1}\,\mu(dx)$ is the Stieltjes transform of the law μ. It is a standard theorem that convergence in law is equivalent to convergence of the Stieltjes transform on any set with an accumulation point, and hence this latter distance metrizes converge in law; so our stronger distance $d_{\mathcal{C}_2}$ also metrizes convergence in law. The class $\mathcal{C}_2$ is somewhat smaller than the space of Lipschitz functions, and so this metric is, a prioiri, weaker than the Wasserstein distance (as expressed in Kantorovich form, cf. [10, 31]). However, as Lemma 3.18 shows, all smooth functions are locally in $\mathcal{C}_2$; the relative strength of $d_{\mathcal{C}_2}$ versus the Wasserstein metric is an interesting question we leave to future investigation.

4.1. **Proof of Theorem 1.10.** We begin by restating Theorem 1.10 in the language and full generality of Section 3.

Theorem 1.10. *Let S be a standard semicircular random variable (cf. Equation 1.4). Let F be self-adjoint in the domain of the gradient, $F\in\mathscr{D}(\nabla)\subset L^2(\mathcal{S},\varphi)$, with $\varphi(F)=0$. Then*

$$d_{\mathcal{C}_2}(F,S)\le\frac{1}{2}\varphi\otimes\varphi\left(\left|\int\nabla_s(N_0^{-1}F)\sharp(\nabla_sF)^*\,ds-1\otimes1\right|\right). \tag{4.1}$$

Proof. The main idea is to connect the random variables F and S through a free Brownian bridge, and control the differential along the path using free Malliavin calculus (cf. Section 3). For $0\le t\le 1$, define

$$F_t=\sqrt{1-t}\,F+S_t, \tag{4.2}$$

where S_t is a free Brownian motion. In particular, S_1 has the same law as the random variable S. Since $d_{\mathcal{C}_2}(F,S)$ depends only on the laws of F and S individually, for convenience we will take S_t freely independent from F. Fix a function $h\in\mathcal{C}_2$. In the proceeding calculations, it will be useful to assume that h is a polynomial; however, polynomials are not in $\mathcal{C}_2$. Rather, fix a compact interval K in $\mathbb{R}$ that contains the spectrum of F_t for each $t\in[0,1]$; for example, since $\|F_t\|\le 2\sqrt{t}+\sqrt{1-t}\|F\|$, we could choose $K=[-2-\|F\|,2+\|F\|]$. For the time-being, we will assume that h is equal to a polynomial on K; i.e. we take $h\in\mathcal{C}_2^{K,P}$, cf. Theorem 3.20.

Define $g(t)=\varphi[h(F_t)]$. The fundamental theorem of calculus yields the desired quantity,

$$\varphi[h(S)]-\varphi[h(F)]=\varphi[h(F_1)]-\varphi[h(F_0)]=g(1)-g(0)=\int_0^1 g'(t)\,dt. \tag{4.3}$$

We can use the free Itô formula of Equation 3.22 to calculate the derivative $g'(t)$. In particular, $dF_t=-\frac{1}{2\sqrt{1-t}}F\,dt+dS_t$, and so applying Equation 3.22 yields

$$\begin{aligned} d[h(F_t)] &= \partial h(F_t)\sharp\,dF_t+\frac{1}{2}\Delta_t h(F_t)\,dt\\ &= \partial h(F_t)\sharp\left\{-\frac{1}{2\sqrt{1-t}}F\,dt+dS_t\right\}+\frac{1}{2}\Delta_t h(F_t)\,dt. \end{aligned} \tag{4.4}$$

Linearity (and uniform boundedness of all terms) allows us to exchange φ with stochastic integrals; in particular, we may write $dg(t) = \varphi\left(d[h(F_t)]\right)$. The (stochastic integral of) the term $\partial h(F_t) \sharp dS_t$ has mean 0, and so we are left with two terms,

$$dg(t) = \frac{1}{2}\left\{-\frac{1}{\sqrt{1-t}}\varphi[\partial h(F_t) \sharp F] + \varphi[\Delta_t h(F_t)]\right\} dt. \tag{4.5}$$

The following lemma allows us to simplify these terms.

Lemma 4.3. *Let X and Y be self-adjoint random variables. Let $h \in \mathscr{C}_2$.*

(a) $\varphi[\partial h(Y) \sharp X] = \varphi[h'(Y)X]$.
(b) $\varphi[\Delta_{\mu_Y} h(Y)] = \varphi \otimes \varphi\,[\partial h'(Y)]$.

Proof of Lemma 4.3. By assumption h takes the form $h = \widehat{\nu}$ for some complex measure ν with finite second absolute moment.

(a) We use the representation of Equation 3.26 for ∂, so that

$$\begin{aligned} \partial h(Y) \sharp X &= \int_0^1 d\alpha \int_{\mathbb{R}} i\xi\, \nu(d\xi)\, (e^{i\alpha\xi Y} \otimes e^{i(1-\alpha)\xi Y}) \sharp X \\ &= \int_0^1 d\alpha \int_{\mathbb{R}} i\xi\, \nu(d\xi)\, e^{i\alpha\xi Y} X e^{i(1-\alpha)\xi Y}. \end{aligned} \tag{4.6}$$

Since φ is a trace, $\varphi[e^{i\alpha\xi Y} X e^{i(1-\alpha)\xi Y}] = \varphi[e^{i\xi Y} X]$. Taking φ of both sides of Equation 4.6, the α integration just yields a constant 1, and so

$$\varphi[\partial h(Y) \sharp X] = \int_{\mathbb{R}} i\xi\, \nu(d\xi) \varphi[e^{i\xi Y} X] = \varphi\left[\left(\int_{\mathbb{R}} i\xi e^{i\xi Y}\, \nu(d\xi)\right) X\right]. \tag{4.7}$$

Since $h'(x) = \int_{\mathbb{R}} i\xi e^{i\xi x}\, \nu(d\xi)$, this yields the result.

(b) By Definition 3.12, $\Delta_{\mu_Y} h(x) = 2\frac{d}{dx}\int_{\mathbb{R}} \partial h(x,y)\, \mu_Y(dy)$. Using the chain rule, we can express $\partial h(x,y) = \int_0^1 h'(\alpha x + (1-\alpha)y)\, d\alpha$. Since $h \in C^2$ and the integrand is bounded, we can rewrite $\Delta_{\mu_Y} h(x)$ as

$$\begin{aligned} \Delta_{\mu_Y} h(x) &= 2\frac{d}{dx}\int_{\mathbb{R}} \mu_Y(dy) \int_0^1 d\alpha\, h'(\alpha x + (1-\alpha)y) \\ &= \int_{\mathbb{R}} \mu_Y(dy) \int_0^1 2\alpha\, d\alpha\, h''(\alpha x + (1-\alpha)y). \end{aligned} \tag{4.8}$$

Now $h''(x) = \int_{\mathbb{R}} -\xi^2 e^{i\xi x}\, \nu(d\xi)$, and so

$$\begin{aligned} \Delta_{\mu_Y} h(x) &= -\int_{\mathbb{R}} \xi^2\, \nu(d\xi) \int_0^1 2\alpha\, d\alpha \int_{\mathbb{R}} \mu_Y(dy) e^{i(1-\alpha)\xi y} e^{i\alpha\xi x} \\ &= -\int_{\mathbb{R}} \xi^2\, \nu(d\xi) \int_0^1 2\alpha\, d\alpha\, e^{i\alpha\xi x} \varphi[e^{i(1-\alpha)\xi Y}]. \end{aligned} \tag{4.9}$$

Evaluating at $x = Y$ and taking the trace, this yields

$$\varphi[\Delta_{\mu_Y} h(Y)] = -\int_{\mathbb{R}} \xi^2 \nu(d\xi) \int_0^1 2\alpha\, d\alpha\, \varphi[e^{i\alpha\xi Y}] \varphi[e^{i(1-\alpha)\xi Y}]. \tag{4.10}$$

On the other hand, following the same identification as in Equation 3.26, we have

$$\partial h'(Y) = -\int_0^1 d\alpha \int_{\mathbb{R}} \xi^2\, \nu(d\xi)\, e^{i\alpha\xi Y} \otimes e^{i(1-\alpha)\xi Y}. \tag{4.11}$$

Taking the trace yields

$$\varphi \otimes \varphi[\partial h'(Y)] = -\int_0^1 d\alpha \int_{\mathbb{R}} \xi^2\, \nu(d\xi)\, \varphi[e^{i\alpha\xi Y}] \varphi[e^{i(1-\alpha)\xi Y}]. \tag{4.12}$$

Subtracting Equation 4.11 from Equation 4.12 and using Fubini's theorem (justified since the modulus of the integrand is $\leq \xi^2$ which is in $L^1(\nu \times [0,1])$) yields

$$\varphi \otimes \varphi[\partial h'(Y)] - \varphi[\Delta_{\mu_Y} h(Y)] = \int_0^1 (2\alpha - 1)\, d\alpha \int_{\mathbb{R}} \xi^2 \nu(d\xi) \varphi[e^{i\alpha\xi Y}]\varphi[e^{i(1-\alpha)\xi Y}]. \tag{4.13}$$

Equation 4.13 expresses the difference $\varphi \otimes \varphi[\partial h'(Y)] - \varphi[\Delta_{\mu_Y} h(Y)]$ as an integral of the form $\int_0^1 (2\alpha - 1)\kappa(\alpha) d\alpha$, where κ is a function with the symmetry $\kappa(\alpha) = \kappa(1-\alpha)$. The substitution $\alpha \mapsto 1 - \alpha$ shows that any such integral is 0, which yields the result.

□

We now apply Lemma 4.3 to Equation 4.5 with $X = F$ and $Y = F_t$; note that $\Delta_t h(F_t)$ is by definition (cf. Proposition 3.13) equal to $\Delta_{\mu_{F_t}} h(F_t)$. Equation 4.5 then becomes

$$g'(t) = \frac{1}{2}\left\{ -\frac{1}{\sqrt{1-t}} \varphi[h'(F_t)F] + \varphi \otimes \varphi[\partial h'(F_t)] \right\}. \tag{4.14}$$

At this point, we invoke the free Malliavin calculus of variations (cf. Section 3) to re-express these two terms. For the first term, we use a standard trick to introduce conditional expectation; by Definition 1.13, $\varphi[h'(F_t)F] = \varphi\left[F \cdot \varphi[h'(F_t)|F]\right]$. Since $F \in \mathscr{D}(\nabla)$ and $\varphi(F) = 0$, Equation 3.35 shows that $F \in \mathscr{D}(N_0^{-1})$, and so $F = \delta(\nabla N_0^{-1} F)$. Hence

$$\varphi[h'(F_t)F] = \varphi[Fh'(F_t)] = \varphi\left\{\delta(\nabla N_0^{-1} F) \cdot \varphi[h'(F_t)|F]\right\} \tag{4.15}$$

The right-hand-side of Equation 4.15 is the $L^2(\mathcal{S}, \varphi)$-inner-product of $\delta(\nabla N_0^{-1} F)$ with $\varphi[h'(F_t)|F]^* = \varphi[\overline{h'}(F_t)|F]$ (since F and F_t are self-adjoint), and this random variable is in the domain $\mathscr{D}(\nabla)$. Hence, since δ and ∇ are adjoint to each other, we have

$$\varphi[h'(F_t)F] = \langle \nabla N_0^{-1} F, \nabla \varphi[\overline{h'}(F_t)|F] \rangle_{\mathscr{B}_2} = \int_{\mathbb{R}} \varphi \otimes \varphi\left(\nabla_s (N_0^{-1} F) \sharp (\nabla_s \varphi[\overline{h'}(F_t)|F])^*\right) ds. \tag{4.16}$$

To be clear: $\sharp$ is the product $(A_1 \otimes B_1) \sharp (A_2 \otimes B_2) = (A_1 A_2) \otimes (B_2 B_1)$. It is easy to check that this product is associative and distributive, as will be needed in the following.

Recall that $F_t = \sqrt{1-t}F + S_t$ and $\overline{h'}$ is equal to a polynomial on a compact interval K which contains the spectrum of F_t. Hence, $\overline{h'}(F_t)$ is a (non-commutative) polynomial in F and S_t. Thus, the conditional expectation $\varphi[\overline{h'}(F_t)|F]$ is a polynomial $p(F)$ in F. We may thus employ the chain rule of Equation 3.37 to find that, for each s,

$$\nabla_s \varphi[\overline{h'}(F_t)|F] = \partial_F \varphi[\overline{h'}(F_t)|F] \sharp \nabla_s F. \tag{4.17}$$

Taking adjoints yields

$$\left(\nabla_s \varphi[\overline{h'}(F_t)|F]\right)^* = (\nabla_s F)^* \sharp \partial_F \varphi[h'(F_t)|F]. \tag{4.18}$$

Now we use the intertwining property of the free difference quotient for the sum of free random variables with respect to conditional expectation (see, [39], Prop. 2.3) and the simple scaling property $\partial_{aX} = a^{-1}\partial_X$ (for $a \in \mathbb{C}$) to get

$$\begin{aligned}\partial_F \varphi[h'(F_t)|F] &= \partial_F \varphi[h'(\sqrt{1-t}\, F + S_t)|F] = \sqrt{1-t}\partial_{\sqrt{1-t}F} \varphi[h'(\sqrt{1-t}\, F + S_t)|F] \\ &= \sqrt{1-t}\, \varphi \otimes \varphi[\partial_{\sqrt{1-t}\, F + S_t} h'(\sqrt{1-t}\, F + S_t)|F] = \sqrt{1-t}\, \varphi \otimes \varphi[\partial h'(F_t)|F]. \end{aligned} \tag{4.19}$$

Remark 4.4. It is here, and only here, that the assumption that S_t is free from the F is required.

Combining Equation 4.19 with Equations 4.16 and 4.18 yields

$$\varphi[h'(F_t)F] = \sqrt{1-t}\, \varphi \otimes \varphi\left(\int_{\mathbb{R}} \nabla_s (N_0^{-1} F) \sharp (\nabla_s F)^* ds \sharp \varphi \otimes \varphi[\partial h'(F_t)|F] \right). \tag{4.20}$$

As for the second term in Equation 4.14, using property (3) of conditional expectation (cf. Definition 1.13) and taking expectations, we express

$$\varphi \otimes \varphi[\partial h'(F_t)] = \varphi \otimes \varphi\left(\varphi \otimes \varphi[\partial h'(F_t)|F]\right). \tag{4.21}$$

Combining Equations 4.14, 4.20, and 4.21 yields

$$\begin{aligned} g'(t) &= -\frac{1}{2}\varphi\otimes\varphi\left\{\int \nabla_s(N_0^{-1}F)\,\sharp\,(\nabla_s F)^*\,ds\,\sharp\,\varphi\otimes\varphi[\partial h'(F_t)|F] - \varphi\otimes\varphi[\partial h'(F_t)|F]\right\} \\ &= -\frac{1}{2}\varphi\otimes\varphi\left\{\left(\int \nabla_s(N_0^{-1}F)\,\sharp\,(\nabla_s F)^*\,ds - 1\otimes 1\right)\,\sharp\,\varphi\otimes\varphi[\partial h'(F_t)|F]\right\}. \end{aligned} \tag{4.22}$$

Integrating with respect to t and using Equation 4.3 gives

$$\begin{aligned} &\varphi[h(S)] - \varphi[h(F)] \\ &\quad = -\frac{1}{2}\varphi\otimes\varphi\left\{\left(\int \nabla_s(N_0^{-1}F)\,\sharp\,(\nabla_s F)^*\,ds - 1\otimes 1\right)\,\sharp\,\int_0^1 \varphi\otimes\varphi[\partial h'(F_t)|F]\,dt\right\}. \end{aligned} \tag{4.23}$$

Applying the non-commutative L^1–L^∞ Hölder inequality (which holds for the product $\sharp$ on the algebra $\mathcal{S}$ since $\sharp$ is really just the natural product on the algebra $\mathcal{S}\otimes\mathcal{S}^{\mathrm{op}}$, cf. Remark 3.10) gives us

$$\begin{aligned} &|\varphi[h(F)] - \varphi[h(S)]| \\ &\quad \leq \frac{1}{2}\varphi\otimes\varphi\left\{\left|\int \nabla_s(N_0^{-1}F)\,\sharp\,(\nabla_s F)^*\,ds - 1\otimes 1\right|\right\}\int_0^1 \left\|\varphi\otimes\varphi[\partial h'(F_t)|F]\right\|_{\mathcal{S}\otimes\mathcal{S}}\,dt. \end{aligned} \tag{4.24}$$

The norm $\|\cdot\|_{\mathcal{S}\otimes\mathcal{S}}$ is the operator (L^∞) norm on the doubled abstract Wigner space. The conditional expectation is an L^∞-contraction (cf. property (2) in Definition 1.13), and so the second term in Equation 4.24 satisfies

$$\int_0^1 \left\|\varphi\otimes\varphi[\partial h'(F_t)|F]\right\|_{\mathcal{S}\otimes\mathcal{S}}\,dt \;\leq \int_0^1 \left\|\partial h'(F_t)\right\|_{\mathcal{S}\otimes\mathcal{S}}\,dt. \tag{4.25}$$

Using Equation 4.11 with $Y = F_t$, note that

$$\begin{aligned} \left\|\partial h'(F_t)\right\|_{\mathcal{S}\otimes\mathcal{S}} &= \left\|\int_0^1 d\alpha \int_{\mathbb{R}} \xi^2\,\nu(d\xi)\,e^{i\alpha\xi F_t}\otimes e^{i(1-\alpha)\xi F_t}\right\|_{\mathcal{S}\otimes\mathcal{S}} \\ &\leq \int_0^1 d\alpha \int_{\mathbb{R}} \xi^2\,\nu(d\xi)\,\|e^{i\alpha\xi F_t}\|_{\mathcal{S}}\|e^{i(1-\alpha)\xi F_t}\|_{\mathcal{S}}. \end{aligned} \tag{4.26}$$

Both of the norm terms in the second line of Equation 4.26 are equal to 1 since F_t is self-adjoint. This shows that $\|\partial h'(F_t)\|_{\mathcal{S}\otimes\mathcal{S}} \leq \mathscr{I}_2(h)$. Combining this with Equations 4.24 and 4.25 yields

$$|\varphi[h(F)] - \varphi[h(S)]| \leq \frac{1}{2}\varphi\otimes\varphi\left\{\left|\int \nabla_s(N_0^{-1}F)\,\sharp\,(\nabla_s F)^*\,ds - 1\otimes 1\right|\right\}\cdot\mathscr{I}_2(h). \tag{4.27}$$

Inequality 4.27 is close to the desired result, but as proved it only holds for $h \in \mathcal{C}_2^{K,P}$. Now take any $h \in \mathcal{C}_2$, and fix an approximating sequence $h_n \in \mathcal{C}_2^{K,P}$ as guaranteed by Theorem 3.20. That theorem shows that $\mathscr{I}_2(h_n) \to \mathscr{I}_2(h)$, while

$$|\varphi[h_n(F)] - \varphi[h_n(S)]| = \left|\int h_n\,d\mu_F - \int h_n\,d\mu_S\right| \to \left|\int h\,d\mu_F - \int h\,d\mu_S\right| = |\varphi[h(F)] - \varphi[h(S)]|$$

as $n \to \infty$, since the supports of μ_F and μ_S are contained in K. This shows that Inequality 4.27 actually holds for all $h \in \mathcal{C}_2$, and this concludes the proof. □

Remark 4.5. In Equation 4.15, instead of using the Ornstein-Uhlenbeck operator, we might have used the Clark-Ocone formula (Proposition 3.28). Tracking this through the remainder of the proof would yield the related estimate

$$d_{\mathcal{C}_2}(F,S) \leq \frac{1}{2}\varphi\otimes\varphi\left(\left|\int \Gamma(\nabla_s F)\,\sharp\,(\nabla_s F)^*\,ds - 1\otimes 1\right|\right). \tag{4.28}$$

This estimate is, in many instances, equivalent to Equation 4.1 as far as convergence to the semi-circular law is concerned, as we discuss in Section 4.2; the formulation of Equation 4.1 is ideally suited to prove Corollary 1.12, which is why we have chosen this presentation.

4.2. **Distance Estimates.** We begin by proving Corollary 1.12, which we restate here for convenience with a little more detail.

Corollary 1.12. *Let $f \in L^2(\mathbb{R}^2_+)$ be mirror-symmetric and normalized $\|f\|_{L^2(\mathbb{R}^n_+)} = 1$, and let S be a standard semicircular random variable. Then*

$$d_{\mathcal{C}_2}(I_2^S(f), S) \leq \frac{1}{2}\sqrt{\frac{3}{2}}\|f \overset{1}{\frown} f\|_{L^2(\mathbb{R}^2_+)} = \frac{1}{2}\sqrt{\frac{3}{2}}\sqrt{\mathbb{E}[I_2^S(f)^4] - 2}.$$

Proof. We will utilize the estimate of Theorem 1.10 applied to the random variable $F = I_2^S(f)$ (which is indeed centred and in the domain $\mathscr{D}(\nabla)$). Note, from the definition, that $N_0^{-1}F = \frac{1}{2}F$ for a double integral. From Equation 3.34, we have

$$\nabla_t F = \nabla_t I_2^S(f) = \int f(t, t_2)\, 1 \otimes dS_{t_2} + \int f(t_1, t)\, dS_{t_1} \otimes 1. \tag{4.29}$$

Using the fact that $f = f^*$, this yields

$$(\nabla_t F)^* = \int f(t_2, t)\, 1 \otimes dS_{t_2} + \int f(t, t_1)\, dS_{t_1} \otimes 1. \tag{4.30}$$

(Note: the adjoint on tensor-product operators is, as one would expect, $(A \otimes B)^* = A^* \otimes B^*$, contrary to the convention on page 379 in [8].) When multiplying Equations 4.29 and 4.30, one must keep in mind the product formula 1.7 for Wigner integrals; in this context of Wigner bi-integrals, the results are

$$\left(\int f(t, s_2)\, 1 \otimes dS_{s_2}\right) \sharp \left(\int f(t_2, t)\, 1 \otimes dS_{t_2}\right) = \int f(t, s_2) f(t_2, t)\, 1 \otimes dS_{t_2} dS_{s_2} + \int f(t, s) f(s, t)\, ds\, 1 \otimes 1 \tag{4.31}$$

$$\left(\int f(t, s_2)\, 1 \otimes dS_{s_2}\right) \sharp \left(\int f(t, t_1)\, dS_{t_1} \otimes 1\right) = \int f(t, s_2) f(t, t_1)\, dS_{t_1} \otimes dS_{s_2} \tag{4.32}$$

$$\left(\int f(s_1, t)\, dS_{s_1} \otimes 1\right) \sharp \left(\int f(t_2, t)\, 1 \otimes dS_{t_2}\right) = \int f(s_1, t) f(t_2, t)\, dS_{s_1} \otimes dS_{t_2} \tag{4.33}$$

$$\left(\int f(s_1, t)\, dS_{s_1} \otimes 1\right) \sharp \left(\int f(t, t_1)\, dS_{t_1} \otimes 1\right) = \int f(s_1, t) f(t, t_1)\, dS_{s_1} dS_{t_1} \otimes 1 + \int f(s, t) f(t, s)\, ds\, 1 \otimes 1. \tag{4.34}$$

Integrating with respect to t and using the identity $f(s, t) = \overline{f(t, s)}$, we then have

$$\begin{aligned} 2\int \nabla_t (N_0^{-1}F) \sharp (\nabla_t F)^*\, dt = &\int\int f(t, s_2) f(t_2, t)\, dt\, 1 \otimes dS_{t_2} dS_{s_2} + \int\int f(t, s_2) f(t, t_1) dt\; dS_{t_1} \otimes dS_{s_2} \\ &+ \int\int f(s_1, t) f(t_2, t) dt\; dS_{s_1} \otimes dS_{t_2} + \int\int f(s_1, t) f(t, t_1)\, dt\, dS_{s_1} dS_{t_1} \otimes 1 \\ &+ 2\int |f(s, t)|^2\, dt ds\, 1 \otimes 1. \end{aligned} \tag{4.35}$$

Now using the normalization $\|f\|_{L^2(\mathbb{R}^2)} = 1$, and making use of contraction notation (cf. Definition 1.21), we have

$$\begin{aligned} 2\left(\int \nabla_t (N_0^{-1}F) \sharp (\nabla_t F)^*\, dt - 1 \otimes 1\right) = &\int \overline{f} \overset{1}{\frown} \overline{f}(s_2, t_2)\, 1 \otimes dS_{t_2} dS_{s_2} + \int \overline{f} \overset{1}{\frown} f(s_2, t_1)\, dS_{t_1} \otimes dS_{s_2} \\ &+ \int f \overset{1}{\frown} \overline{f}(s_1, t_2)\, dS_{s_1} \otimes dS_{t_2} + \int f \overset{1}{\frown} f(s_1, t_1)\, dS_{s_1} dS_{t_1} \otimes 1. \end{aligned} \tag{4.36}$$

We now employ Theorem 1.10. Equation 4.1 states that

$$d_{\mathcal{C}_2}(F,S) \leq \frac{1}{2}\left\|\langle \nabla(N_0^{-1}F)\sharp(\nabla F)^*, \mathbb{1}_{\mathbb{R}_+}\rangle_{L^2(\mathbb{R}_+)} - 1\otimes 1\right\|_{L^1(\mathcal{S}\otimes\mathcal{S},\varphi\otimes\varphi)}. \tag{4.37}$$

In any W^*-probability space, $\|\cdot\|_{L^1} \leq \|\cdot\|_{L^2}$; we will estimate the $L^2(\mathcal{S}\otimes\mathcal{S},\varphi\otimes\varphi)$ norm. It is useful to relabel the indices in Equation 4.36 and group them according to different orders of (bi)chaos; the right-hand side of that equation is equal to

$$\begin{aligned}
&\int \overline{f}\overset{1}{\frown}\overline{f}(t_2,t_1)\, 1\otimes dS_{t_1}dS_{t_2}\\
&+\int \left[\overline{f}\overset{1}{\frown}f(t_2,t_1) + f\overset{1}{\frown}\overline{f}(t_1,t_2)\right] dS_{t_1}\otimes dS_{t_2}\\
&+\int f\overset{1}{\frown}f(t_1,t_2)\, dS_{t_1}dS_{t_2}\otimes 1.
\end{aligned}$$

A simple calculation using the fact that $f = f^*$ shows that $\overline{f}\overset{1}{\frown}f(t_2,t_1) = \overline{f}\overset{1}{\frown}f(t_1,t_2)$. The three integrals above are in orthogonal orders of chaos; employing the Wigner bisometry 3.29, we have

$$\begin{aligned}
&4\left\|\langle \nabla(N_0^{-1}F)\sharp(\nabla F)^*, \mathbb{1}_{\mathbb{R}_+}\rangle_{L^2(\mathbb{R}_+)} - 1\otimes 1\right\|^2_{L^2(\mathcal{S}\otimes\mathcal{S},\varphi\otimes\varphi)}\\
&\qquad = \|\overline{f}\overset{1}{\frown}\overline{f}\|^2_{L^2(\mathbb{R}_+^2)} + \|\overline{f}\overset{1}{\frown}f + f\overset{1}{\frown}\overline{f}\|^2_{L^2(\mathbb{R}_+^2)} + \|f\overset{1}{\frown}f\|^2_{L^2(\mathbb{R}_+^2)}.
\end{aligned} \tag{4.38}$$

Another simple calculation, again using the identity $f(s,t) = \overline{f(t,s)}$, shows that

$$\|f\overset{1}{\frown}f\|^2_{L^2(\mathbb{R}_+^2)} = \|\overline{f}\overset{1}{\frown}\overline{f}\|^2_{L^2(\mathbb{R}_+)^2} = \int_{\mathbb{R}_+^3} dt\, ds_1 ds_2\, |f(t,s_1)|^2|f(t,s_2)|^2, \tag{4.39}$$

while

$$\|f\overset{1}{\frown}\overline{f}\|^2_{L^2(\mathbb{R}_+^2)} = \|\overline{f}\overset{1}{\frown}f\|^2_{L^2(\mathbb{R}_+)^2} = \int_{\mathbb{R}_+^3} dt\, ds_1 ds_2\, f(t,s_1)^2\overline{f(t,s_2)}^2. \tag{4.40}$$

Hence $\|f\overset{1}{\frown}\overline{f}\|_{L^2(\mathbb{R}_+^2)} = \|\overline{f}\overset{1}{\frown}f\|_{L^2(\mathbb{R}_+^2)} \leq \|f\overset{1}{\frown}f\|_{L^2(\mathbb{R}_+)}$. Using the triangle inequality in Equation 4.38 then gives us the estimate

$$\left\|\langle \nabla(N_0^{-1}F)\sharp(\nabla F)^*, \mathbb{1}_{\mathbb{R}_+}\rangle_{L^2(\mathbb{R}_+)} - 1\otimes 1\right\|^2_{L^2(\mathcal{S}\otimes\mathcal{S},\varphi\otimes\varphi)} \leq \frac{3}{2}\|f\overset{1}{\frown}f\|^2_{L^2(\mathbb{R}_+^2)}, \tag{4.41}$$

and so Equation 4.37 and the ensuing discussion imply

$$d_{\mathcal{C}_2}(F,S) = d_{\mathcal{C}_2}(I_s^S(f),S) \leq \frac{1}{2}\sqrt{\frac{3}{2}}\|f\overset{1}{\frown}f\|_{L^2(\mathbb{R}_+^2)}. \tag{4.42}$$

Now, as calculated in Equation 2.3 (in this instance with $n=2$),

$$\varphi(I_2^S(f)^4) = 2 + \|f\overset{1}{\frown}f\|^2_{L^2(\mathbb{R}_+^2)}. \tag{4.43}$$

Equations 4.42 and 4.43 together conclude the proof. □

Remark 4.6. At first glance it might seem that calculations like those in the proof of Corollary 1.12 could be employed to prove similar quantitative results for Wigner integrals I_n^S of arbitrary order $n \geq 2$. Note, however, that the mirror symmetry of f was used in different ways at several points in the above proof. In practice, if one tries to generalize these techniques to I_3^S, in fact f must be *fully symmetric*. The range of I_n^S on fully symmetric functions is a very small subspace of the full nth Wigner chaos, and so we do not have quantitative bounds for generic higher integrals.

Remark 4.7. As a quick illustration, we use the first inequality in Corollary 1.12 to refine Corollary 2.3 in the case $n=2$ and the random variables X_k are freely independent $S(0,1)$ random variables;

in particular, $\rho(k) = \delta_{k0}$. In this case, one can take these random variables to be such that $X_k = S_{k+1} - S_k$, $k \geq 0$, so that $V_m = I_2^S(f_m)$, with

$$f_m(x,y) = \frac{1}{\sqrt{m}} \sum_{k=0}^{m-1} \mathbb{1}_{(k,k+1]}(x) \mathbb{1}_{(k,k+1]}(y).$$

Elementary computations now yield $\|f_m \overset{1}{\frown} f_m\|_{L^2(\mathbb{R}_+^2)} = 1/\sqrt{m}$, and therefore

$$d_{\mathcal{C}_2}(V_m, S) \leq \frac{1}{2}\sqrt{\frac{3}{2m}},$$

which is consistent with usual Berry-Esseen estimates.

In light of Theorem 1.3, the proof of Corollary 1.12 shows that convergence of the quantity on the right-hand-side of Equation 4.1 to 0 is equivalent to convergence of F to S in law, at least in the case of double Wigner integrals. We conclude this paper with a collection of other equivalences, stated in terms of the gradient operator, in the class of double Wigner integrals; whether they hold for higher orders, or more generally on the domain $\mathscr{D}(\nabla)$, is left as an open question for further investigation. To simplify matters, we restrict to the real case for the following.

Theorem 4.8. *Let $(f_k)_{k\in\mathbb{N}}$ be a sequence of fully symmetric functions in $L^2(\mathbb{R}_+^2)$, each normalized $\|f_k\|_{L^2(\mathbb{R}_+)^2} = 1$, and set $F_k = I_2^S(f_k)$. Then for each k*

$$F_k = \delta(\nabla N_0^{-1} F_k) = \delta(\Gamma \nabla F_k).$$

Moreover, the following four conditions are equivalent.

(1) *F_k converges in law to the standard semicircular distribution $S(0,1)$.*

(2) *$\int \nabla_t (N_0^{-1} F_k) \sharp (\nabla_t F_k)^* \, dt$ converges to $1 \otimes 1$ in $L^2(\mathcal{S} \otimes \mathcal{S}, \varphi \otimes \varphi)$.*

(3) *$\int \Gamma(\nabla_t F_k) \sharp (\nabla_t F_k)^* \, dt$ converges to $1 \otimes 1$ in $L^2(\mathcal{S} \otimes \mathcal{S}, \varphi \otimes \varphi)$.*

(4) *$\int \langle\langle \Gamma \nabla_t F_k, \Gamma \nabla_t F_k \rangle\rangle \, dt$ converges to 1 in $L^2(\mathcal{S}, \varphi)$.*

The pairing $\langle\langle \cdot\,, \cdot \rangle\rangle \colon (\mathcal{S} \otimes \mathcal{S})^2 \to \mathcal{S}$ is defined by $\langle\langle X, Y \rangle\rangle = (1_{\mathcal{S}} \otimes \varphi)[X \sharp Y]$. For example,

$$\langle\langle \int f(t_1)\, 1 \otimes dS_{t_1}, \int g(t_2)\, 1 \otimes dS_{t_2} \rangle\rangle = \int f(t_1) g(t_2) dS_{t_2} dS_{t_1} + \int f(t) g(t)\, dt,$$

where we have used the product formula of Equation 1.7. On the other hand, $\langle\langle 1 \otimes dS_{t_1}, dS_{t_2} \otimes 1 \rangle\rangle = 0$ since $\varphi(dS_1) = 0$.

Proof. Equations 4.38 and 4.43 in the proof of Corollary 1.12 show that, in the case that f is real-valued,

$$\left\| \int \nabla_t (N_0^{-1} F) \sharp (\nabla_t F)\, dt - 1 \otimes 1 \right\|^2_{L^2(\mathcal{S}\otimes\mathcal{S}, \varphi\otimes\varphi)} = \frac{3}{2}(\varphi(F^4) - 2),$$

where $F = I_2^S(f)$. In light of Theorem 1.3, this proves the equivalence (1)$\Longleftrightarrow$(2). The bound 4.28 shows that (3)$\Longrightarrow$(1), and so to prove the equivalence of (1) and (3) it suffices (due to Theorem 1.6) to prove that the condition $f_k \overset{1}{\frown} f_k \to 0$ implies (3). To that end, we adopt the standard notation $x \vee y = \max\{x, y\}$ and $x \wedge y = \min\{x, y\}$. The following identity is easily proved.

$$\int_0^\infty \left(\int_{x\vee y}^\infty f_k(x,t) f_k(y,t)\, dt \right)^2 dxdy = \int_0^\infty \left(\int_0^{x\wedge y} f_k(x,t) f_k(y,t)\, dt \right)^2 dxdy. \tag{4.44}$$

The following equivalence was proved in [28].

$$f_k \overset{1}{\frown} f_k \to 0 \text{ in } L^2(\mathbb{R}_+^2) \quad \text{iff} \quad \int_0^\infty \left(\int_0^{x\wedge y} f_k(x,t) f_k(y,t)\, dt \right)^2 dxdy \to 0. \tag{4.45}$$

Note that Equations 4.44 and 4.45 imply that, if $f_k \overset{1}{\frown} f_k \to 0$, then the three functions

$$\int_0^{x\wedge y} f_k(x,t)f_k(y,t)\,dt, \qquad \int_{x\vee y}^{\infty} f_k(x,t)f_k(y,t)\,dt, \qquad \int_{x\vee y}^{x\wedge y} f_k(x,t)f_k(y,t)\,dt \tag{4.46}$$

each vanish in the limit. Note also that the action of Γ on the biprocess $\nabla_t F_k$ is, as in the classical case, to restrict stochastic integrals to the interval $[0,t]$:

$$\Gamma\nabla_t F_k = \int f_k(t,t_2)\mathbb{1}_{t_2\le t}\, 1\otimes dS_{t_2} + \int f_k(t_1,t)\mathbb{1}_{t_1\le t}\, dS_{t_1}\otimes 1. \tag{4.47}$$

The present symmetry assumptions on f_k imply that $(\nabla F_k)^* = \nabla F_k$. Proceeding with calculations like those in the proof of Corollary 1.12, using the symmetry and L^2-normalization of f_k, we then have

$$\begin{aligned}\int \Gamma\nabla_t F_k \sharp (\nabla_t F_k)^*\,dt - 1\otimes 1 &= \int\left(\int_{t_2}^{\infty} f_k(t,t_1)f_k(t,t_2)\,dt\right) 1\otimes dS_{t_1}dS_{t_2}\\ &+ \int\left(\int_{t_2}^{\infty} f_k(t,t_1)f_k(t,t_2)\,dt\right) dS_{t_1}\otimes dS_{t_2}\\ &+ \int\left(\int_{t_1}^{\infty} f_k(t_1,t)f_k(t_2,t)\,dt\right) dS_{t_1}\otimes dS_{t_2}\\ &+ \int\left(\int_{t_1}^{\infty} f_k(t_1,t)f(t_2,t)\,dt\right) dS_{t_1}dS_{t_2}\otimes 1.\end{aligned} \tag{4.48}$$

Using Fubini's theorem, we can calculate that the L^2 norm of each of the four terms in Equation 4.48 is given by

$$\begin{aligned}&\int_{\mathbb{R}_+^2} dxdy\left(\int_x^{\infty} f_k(t,x)f_k(t,y)\,dt\right)^2\\ &\qquad = \int_0^{\infty} dx\int_0^x dy\left(\int_{x\vee y}^{\infty} f_k(t,x)f_k(t,y)\,dt\right)^2 + \int_0^{\infty} dy\int_0^y dx\left(\int_{x\wedge y}^{\infty} f_k(t,x)f_k(t,y)\,dt\right)^2.\end{aligned}$$

Hence, if $f_k \overset{1}{\frown} f_k \to 0$, then Equation 4.46 shows that each of these two terms vanishes in the limit. This proves the implication (3)$\Longrightarrow$(1).

For the final equivalence, we use the explicit representation

$$\begin{aligned}&\langle\langle \Gamma\nabla_t F_k, \Gamma\nabla_t F_k\rangle\rangle\\ &\qquad = 2\int f_k(t,v)^2\mathbb{1}_{v\le t}\,dv + \int f_k(t_1,t)f_k(t_2,t)\mathbb{1}_{t_1\le t}\mathbb{1}_{t_2\le t}\,dS_{t_1}dS_{t_2}.\end{aligned}$$

Integrating with respect to t and using Equations 4.44 and 4.45 as above proves the equivalence (1)$\Longleftrightarrow$(4). □

Remark 4.9. As demostrated in [8, Theorem 4.12], the quantity $\int\langle\langle \Gamma\nabla_t F_k, \Gamma\nabla_t F_k\rangle\rangle dt$ in condition (4) of Theorem 4.8 can be interpreted as the 'quadratic variation' of an appropriate free Brownian martingale. Note that quadratic variations play a crucial role in the original proof of Theorem 1.1, as originally given in [28].

Remark 4.10. Once again, one might expect that calculations like those above would show the equivalence of items (1)–(4) in Theorem 4.8 for any order of chaos (higher than 1), as was proved in the classical case in [28]. In principle, this may be possible for fully symmetric kernels f, but in orders ≥ 3 of Wigner chaos, such kernels span only a tiny subspace of all stochastic integrals. Indeed, it is an interesting open question if a counter-example to these equivalences can be found in the third chaos; until now, the authors have not been able to find one, but suspect that Theorem 4.8 does not generally hold in the free context.

APPENDIX A. PROOF OF THEOREM 3.20

We break the proof into four steps. First we show that it is sufficient to consider only those $h \in \mathcal{C}_2$ that arise as Fourier transforms of compactly-supported measures, in Lemma A.1. Next we reduce to those h that are Fourier transforms of measures with a smooth, compactly-supported density, in Lemma A.2. In Lemma A.3, we show (following [32, Theorem 7.26]) that there is a polynomial approximate identity on any symmetric compact interval. Finally, we use this approximate identity locally to approximate any smoothly-arising h by local polynomials on the Fourier side in Lemma A.4, completing the proof. The proof will actually show that a space smaller than $\mathcal{C}_2^{K,P}$ is appropriately dense: the local polynomials may be assumed to live in the Schwartz space $\mathcal{S}(\mathbb{R})$ of rapidly-decaying smooth functions.

Lemma A.1. *Let $h \in \mathcal{C}_2$. There exists a sequence of compactly-supported complex measures ν_n such that, setting $h_n = \widehat{\nu}_n$,*

(1) *$\mathscr{I}_2(h_n) \to \mathscr{I}_2(h)$, and*
(2) *if μ is any finite measure then $\int h_n \, d\mu \to \int h \, d\mu$.*

Proof. Let $h = \widehat{\nu}$ where ν is a complex measure satisfying $\int \xi^2 \, |\nu|(d\xi) < \infty$. Let $\nu_n(d\xi) = \mathbb{1}_{|\xi| \le n} \nu(d\xi)$, and take $h_n = \widehat{\nu_n}$. Then

$$\mathscr{I}_2(h_n) = \int_{-n}^{n} \xi^2 \, |\nu|(d\xi). \tag{A.1}$$

Since $h \in \mathcal{C}_2$, the function $\xi \mapsto \xi^2$ is in $L^1(|\nu|)$; hence, by the Dominated Convergence Theorem, the integrals in Equation A.1 converge to $\int \xi^2 \, |\nu|(d\xi) = \mathscr{I}_2(h)$ as desired. Now, for any $x \in \mathbb{R}$,

$$|h_n(x) - h(x)| = \left| \int e^{ix\xi} (\mathbb{1}_{|\xi| \le n} - 1) \, \nu(d\xi) \right| \le \int \mathbb{1}_{|\xi| > n} \, |\nu|(d\xi). \tag{A.2}$$

The integrand $\mathbb{1}_{|\xi|>n}$ converges pointwise to 0 and is bounded, so since $|\nu|$ is a finite measure, the Dominated Convergence Theorem shows that $h_n \to h$ pointwise. Finally, note also that $\|h_n\|_{L^\infty} \le \int |\nu_n| \le \int |\nu| < \infty$, and so since μ is a finite measure, one more application of the Dominated Convergence Theorem shows that $\int h_n \, d\mu \to \int h \, d\mu$ as desired. □

Lemma A.2. *Let $h \in \mathcal{C}_2$ with $h = \widehat{\nu}$ for some compactly-supported complex measure ν. There exists a sequence of smooth $\mathbb{C}$-valued functions $\psi_n \in C_c^\infty$ such that, setting $h_n = \widehat{\psi}_n$,*

(1) *$\mathscr{I}_2(h_n) \to \mathscr{I}_2(h)$, and*
(2) *if μ is any finite measure then $\int h_n \, d\mu \to \int h \, d\mu$.*

Proof. Let $\phi \in C_c^\infty$ be a non-negative smooth compactly supported function, such that $\int \phi(\xi) \, d\xi = 1$. Let $\phi_n(\xi) = n \, \phi(\xi/n)$. Define $\psi_n = \phi_n * \nu$; then $\psi_n \to \nu$ weakly. Note that $\operatorname{supp} \phi_n \subset \operatorname{supp} \phi$. Since ν is compactly-supported, there is thus a single compact interval K that contains the supports of ψ_n for all n along with the support of ν; moreover, the functions ψ_n are all smooth since ϕ_n is smooth. Set $h_n = \widehat{\psi}_n$. Hence,

$$\mathscr{I}_2(h_n) = \int_K \xi^2 |\psi_n(\xi)| \, d\xi \to \int_K \xi^2 |\nu|(d\xi) = \mathscr{I}_2(h), \tag{A.3}$$

where the convergence follows from the weak convergence of $|\psi_n|$ to $|\nu|$ and the continuity of $\xi \mapsto \xi^2$ on the compact set K. For the second required convergence, we use Fubini's theorem:

$$\begin{aligned} \int h_n(x) \, \mu(dx) = \int \widehat{\psi}_n(x) \, \mu(dx) &= \int \mu(dx) \int e^{ix\xi} \psi_n(\xi) \, d\xi \\ &= \int \psi_n(\xi) \, d\xi \int e^{ix\xi} \, \mu(dx) = \int \widehat{\mu}(\xi) \psi_n(\xi) \, d\xi, \end{aligned} \tag{A.4}$$

where the application of Fubini's theorem is justified by the fact that the function $(x, \xi) \mapsto e^{ix\xi} \psi_n(\xi)$ is in $L^1(\mu \times d\xi)$ since $\psi_n \in L^1(d\xi)$ and μ is a finite measure. The function $\widehat{\mu}$ is continuous and

bounded since μ is finite, and so since $\psi_n \to \nu$ weakly and $\operatorname{supp} \psi_n \subset K$ for each n,

$$\int \widehat{\mu}(\xi)\psi_n(\xi)\, d\xi = \int_K \widehat{\mu}(\xi)\psi_n(\xi)\, d\xi \to \int_K \widehat{\mu}(\xi)\, \nu(d\xi). \tag{A.5}$$

The function $(x, \xi) \mapsto e^{ix\xi}$ is in $L^1(\mu \times |\nu|)$ since both are finite measures, and so we may apply Fubini's theorem again to find that

$$\int_K \widehat{\mu}(\xi)\, \nu(d\xi) = \int \nu(d\xi) \int e^{ix\xi}\, \mu(dx) = \int \mu(dx) \int e^{ix\xi}\, \nu(d\xi) = \int \widehat{\nu}(x)\, \mu(dx), \tag{A.6}$$

where the first equality uses the fact that $\operatorname{supp} \nu \subseteq K$. Equations A.4–A.6 combine to show that $\int h_n\, d\mu \to \int h\, d\mu$, as required. □

Lemma A.3. *Let $r > 0$. There is a sequence of real polynomials q_n such that, for any function f continuous on $\mathbb{R}$ and equal to 0 outside of $[-r, r]$, the functions*

$$f_n(x) = \int_{-r}^{r} f(x-t)q_n(t)\, dt = \left(f * (q_n \mathbb{1}_{[-r,r]})\right)(x) \tag{A.7}$$

are polynomials that converge uniformly to f on $[-r, r]$.

Proof. This is proved in [32, Theorem 7.26] in the case $r = 1$ with polynomials $c_n(1 - x^2)^n$ for appropriate normalization constants c_n. Rudin only states (and uses) the uniform convergence on $[0, 1]$, but it is easy to check that the proof yields uniform convergence on $[-1, 1]$. Rescaling the polynomials

$$q_n(x) = \frac{c_n}{r^{2n+1}}(r^2 - x^2)^n \tag{A.8}$$

gives us the desired result. To be clear: the functions f_n in Equation A.7 are polynomials due to the following change of variables,

$$f_n(x) = \int_{-r}^{r} f(x-t)q_n(t)\, dt = \int_{x-r}^{x+r} f(x-t)q_n(t)\, dt = \int_{-r}^{r} f(t)q_n(x+t)\, dt, \tag{A.9}$$

where the second equality is justified by the fact that $f(x - t) = 0$ unless $t \in [x - r, x + r]$. □

Lemma A.4. *Let $h \in \mathcal{C}_2$ with $h = \widehat{\psi}$ for some $\psi \in C_c^\infty$. Let $K \subset \mathbb{R}$ be a compact interval. There exists a sequence ψ_n of functions in the Schwartz space $\mathcal{S}(\mathbb{R})$ such that the functions $h_n = \widehat{\psi}_n$ are in $\mathcal{C}_2^{K,P}$, and*

(1) *$\mathscr{I}_2(h_n) \to \mathscr{I}_2(h)$, and*
(2) *if μ is a finite measure supported in K then $\int h_n\, d\mu \to \int h\, d\mu$.*

Proof. Choose $r > \sup\{|x| : x \in K\}$. Let $\phi \in C_c^\infty$ be non-negative, with support contained in $[-r, r]$, such that $\phi(x) = 1$ for $x \in K$ (which is possible since K is strictly contained in $[-r, r]$). For convenience, set $p_n = q_n \mathbb{1}_{[-r,r]}$ where q_n is the Bernstein polynomial of Equation A.8. Define

$$\psi_n = \psi - \left[\widehat{\psi} \cdot \phi^2\right]^\vee + \left[[(\widehat{\psi}\phi) * p_n] \cdot \phi\right]^\vee. \tag{A.10}$$

Note: for a Schwartz function $\gamma \in \mathcal{S}(\mathbb{R})$, the function $\gamma^\vee = \check{\gamma}$ denotes the inverse Fourier transform of γ,

$$\gamma^\vee(\xi) = \check{\gamma}(\xi) = \frac{1}{2\pi} \int e^{-ix\xi}\gamma(x)\, dx.$$

Since $\widehat{\psi}\phi \in C_c^\infty$, the convolution with p_n is well-defined and C^∞; cutting off with ϕ again yields a C_c^∞ function, and so the inverse Fourier transform is a Schwartz function. Similarly, ϕ^2 is C_c^∞ and $\widehat{\psi} \in \mathcal{S}(\mathbb{R})$, so their product is a Schwartz function, as is its inverse Fourier transform. Thus, $\psi_n \in \mathcal{S}(\mathbb{R})$. Now we compute

$$\widehat{\psi}_n = \widehat{\psi} - \widehat{\psi} \cdot \phi^2 + [(\widehat{\psi}\phi) * p_n] \cdot \phi = \widehat{\psi} \cdot (1 - \phi^2) + [(\widehat{\psi}\phi) * p_n] \cdot \phi.$$

Since $\phi(x)^2 = 1$ for $x \in K$, we have $\widehat{\psi}_n(x) = [(\widehat{\psi}\phi) * p_n](x)$ for $x \in K$. Since the function $f = \widehat{\psi}\phi$ is continuous and equal to 0 outside of $[-r, r]$, Equations A.7 and A.9 show that $\widehat{\psi}_n$ is a polynomial

on K. Moreover, ψ_n is rapidly decaying and smooth, so $\int \xi^2 |\psi_n(\xi)|\, d\xi < \infty$. Thus $h_n = \widehat{\psi}_n \in \mathcal{C}_2^{K,P}$ as required. We must now verify conditions (1) and (2) of the lemma.

First, we compute that

$$\psi_n(x) - \psi(x) = \frac{1}{2\pi} \int e^{-i\xi x} \left[[(\widehat{\psi}\phi) * p_n](\xi) - \widehat{\psi}(\xi)\phi(\xi) \right] \phi(\xi)\, d\xi. \tag{A.11}$$

Following this we make the straightforward estimate

$$\begin{aligned} |\psi_n(x) - \psi(x)| &\leq \frac{1}{2\pi} \int \left| [(\widehat{\psi}\phi) * p_n](\xi) - \widehat{\psi}(\xi)\phi(\xi) \right| \phi(\xi)\, d\xi \\ &= \frac{1}{2\pi} \int_{-r}^{r} \left| [(\widehat{\psi}\phi) * p_n](\xi) - \widehat{\psi}(\xi)\phi(\xi) \right| \phi(\xi)\, d\xi. \end{aligned} \tag{A.12}$$

Lemma A.3 shows that $(\widehat{\psi}\phi) * p_n$ converges to $\widehat{\psi}\phi$ uniformly on $[-r, r]$. Hence, since the integrand in Equation A.12 converges to 0 uniformly on the (compact) domain of integration, it follows that $\psi_n(x) \to \psi(x)$ for each x.

We must now show that $\mathscr{I}_2(h_n) \to \mathscr{I}_2(h)$ (recall that $h_n = \widehat{\psi}_n$ and $h = \widehat{\psi}$). This will follow from the stronger claim that $\mathscr{I}_2(h_n - h) \to 0$, which we now show to be true. We compute as follows.

$$\mathscr{I}_2(h_n - h) = \int |\psi_n(\xi) - \psi(\xi)| \xi^2\, d\xi = \int g_n(\xi) \frac{d\xi}{1+\xi^2},$$

where $g_n(\xi) = \xi^2(1+\xi^2)|\psi_n(\xi) - \psi(\xi)|$. We make this transformation so we can use the finite measure $\upsilon(d\xi) = d\xi/(1+\xi^2)$ in the following estimates. Since $\psi_n \to \psi$ pointwise, it follows that $g_n \to 0$ pointwise. In order to use a uniform integrability condition, we wish to bound the $L^2(\upsilon)$-norm of g_n. To that end, we compute

$$\|g_n\|_{L^2(\upsilon)}^2 = \int g_n(\xi)^2\, \upsilon(d\xi) = \int |\psi_n(\xi) - \psi(\xi)|^2 \xi^4 (1+\xi^2)^2 \cdot \frac{d\xi}{1+\xi^2}. \tag{A.13}$$

Now, referring to Equation A.11, $\psi_n - \psi = \check{\vartheta}_n$ where $\vartheta_n = [(\widehat{\psi}\phi) * p_n] \cdot \phi - \widehat{\psi}\phi^2$. Simplifying Equation A.13 yields

$$\|g_n\|_{L^2(\upsilon)}^2 = \int |\check{\vartheta}_n(\xi)|^2 \xi^4 (1+\xi^2)\, d\xi \leq \int |\check{\vartheta}_n(\xi)|^2 \xi^2 (1+\xi^2)^2\, d\xi = \int |\xi(1+\xi^2)\check{\vartheta}_n(\xi)|^2\, d\xi.$$

Since $\xi^k \check{\vartheta}_n(\xi) = (-i)^k (\vartheta_n^{(k)})^\vee(\xi)$ for $k \in \mathbb{N}$, this simplifies to

$$\|g_n\|_{L^2(\upsilon)}^2 \leq \int |(\vartheta_n')^\vee(\xi) + (\vartheta_n''')^\vee(\xi)|^2\, d\xi.$$

That is, $\|g_n\|_{L^2(\upsilon)} \leq \|(\vartheta_n')^\vee + (\vartheta_n''')^\vee\|_{L^2(\mathbb{R})} \leq \|(\vartheta_n')^\vee\|_{L^2(\mathbb{R})} + \|(\vartheta_n''')^\vee\|_{L^2(\mathbb{R})} = \|\vartheta_n'\|_{L^2(\mathbb{R})} + \|\vartheta_n'''\|_{L^2(\mathbb{R})}$, where we have used Parseval's identity in the last equality. We now must compute some derivatives. Using the fact that $(\gamma * p)' = \gamma' * p$ whenever γ and p are functions whose convolution is well-defined and γ is C^1, we have

$$\vartheta_n' = ((\widehat{\psi}\phi)' * p_n) \cdot \phi + ((\widehat{\psi}\phi) * p_n) \cdot \phi' - (\widehat{\psi}\phi^2)' \tag{A.14}$$

$$\vartheta_n''' = ((\widehat{\psi}\phi)''' * p_n) \cdot \phi + 3((\widehat{\psi}\phi)'' * p_n) \cdot \phi' + 3((\widehat{\psi}\phi)' * p_n) \cdot \phi'' + ((\widehat{\psi}\phi) * p_n) \cdot \phi''' - (\widehat{\psi}\phi^2)'''. \tag{A.15}$$

The functions $\widehat{\psi}\phi$ and $\widehat{\psi}\phi^2$ are both in C_c^∞, and so there is a constant A so that $\|(\widehat{\psi}\phi)^{(k)}\|_{L^2(\mathbb{R})} \leq A$ and $\|(\widehat{\psi}\phi^2)^{(k)}\|_{L^2(\mathbb{R})} \leq A$ for $0 \leq k \leq 3$. Since $\phi \in C_c^\infty$, there is a constant B so that $\|\phi^{(k)}\|_{L^\infty(\mathbb{R})} \leq B$ for $0 \leq k \leq 3$. Using Young's convolution inequality $\|\gamma * p\|_{L^2(\mathbb{R})} \leq \|\gamma\|_{L^2(\mathbb{R})} \|p\|_{L^1(\mathbb{R})}$, Equation A.14 gives us

$$\begin{aligned} \|\vartheta_n'\|_{L^2(\mathbb{R})} &\leq B\|(\widehat{\psi}\phi)' * p_n\|_{L^2(\mathbb{R})} + B\|(\widehat{\psi}\phi) * p_n\|_{L^2(\mathbb{R})} + A \\ &\leq B\|(\widehat{\psi}\phi)'\|_{L^2(\mathbb{R})} \|p_n\|_{L^1(\mathbb{R})} + B\|(\widehat{\psi}\phi)\|_{L^2(\mathbb{R})} \|p_n\|_{L^1(\mathbb{R})} + A \\ &\leq BA + BA + A, \end{aligned}$$

where we use the normalization $\|p_n\|_{L^1(\mathbb{R})} = 1$. A similar calculation using Equation A.15 shows that

$$\|\vartheta_n'''\|_{L^2(\mathbb{R})} \leq 8BA + A.$$

Hence, we have

$$\sup_n \|g_n\|_{L^2(\upsilon)} \leq \sup_n \left(\|\vartheta_n'\|_{L^2(\mathbb{R})} + \|\vartheta_n'''\|_{L^2(\mathbb{R})}\right) \leq 10BA + 2A < \infty. \tag{A.16}$$

This allows us to conclude the proof as follows. For any $M > 0$, we have

$$\mathscr{I}_2(h_n - h) = \int g_n \, d\upsilon = \int g_n \mathbb{1}_{0 \leq g_n \leq M} \, d\upsilon + \int g_n \mathbb{1}_{g_n > M} \, d\upsilon.$$

The first integrand is bounded above by M, and since υ is a finite measure, the constant M is in $L^1(\upsilon)$. Hence, since we have already shown that $g_n \to 0$ pointwise, we conclude that the first integral converges to 0 using the Dominated Convergence Theorem. For the second integral, notice that on the domain $\{g_n > M\}$ the function g_n/M is ≥ 1, and so

$$\int g_n \mathbb{1}_{g_n > M} \, d\upsilon \leq \int g_n \cdot \frac{g_n}{M} \mathbb{1}_{g_n > M} \, d\upsilon \leq \frac{1}{M} \int g_n^2 \, d\upsilon \leq \frac{1}{M} \sup_n \|g_n\|^2_{L^2(\upsilon)}.$$

Since this is true for any M, by taking $M \to \infty$ while $n \to \infty$ we have $\mathscr{I}_2(h_n - h) \to 0$ as desired.

Finally, since μ is supported in K and $\phi = 1$ on K,

$$\begin{aligned} \int h_n \, d\mu = \int_K \widehat{\psi}_n \, d\mu &= \int_K (1 - \phi^2)\widehat{\psi} \, d\mu + \int_K ((\widehat{\psi}\phi) * p_n) \cdot \phi \, d\mu \\ &= \int_K (\widehat{\psi}\phi) * p_n \, d\mu. \end{aligned}$$

By construction $(\widehat{\psi}\phi) * p_n \to \widehat{\psi}\phi$ (uniformly) on K, and also $\|(\widehat{\psi}\phi) * p_n\|_{L^\infty} \leq \|\widehat{\psi}\phi\|_{L^\infty}\|p_n\|_1 = \|\widehat{\psi}\phi\|_{L^\infty} < \infty$. Since μ is a finite measure, the Dominated Convergence Theorem therefore shows that

$$\int h_n \, d\mu = \int_K (\widehat{\psi}\phi) * p_n \, d\mu \to \int_K \widehat{\psi}\phi \, d\mu = \int_K \widehat{\psi} \, d\mu = \int h \, d\mu.$$

This concludes the proof. □

Acknowledgment. The authors wish to thank Bruce Driver for many useful conversations.

References

[1] Anderson, G.; Guionnet, A.; Zeitouni, O.: *An Introduction to Random Matrices.* Cambridge Studies in Advanced Mathematics **118**, Cambridge University Press (2010)

[2] Anshelevich, M.: *Free stochastic measures via noncrossing partitions II.* Pacific J. Math. **207**, 13–30 (2002)

[3] Anshelevich, M.: *Partition-dependent stochastic measures and q-deformed cumulants.* Doc. Math. **6**, 343–384 (2001)

[4] Anshelevich, M.: *Free stochastic measures via noncrossing partitions.* Adv. Math. **155**, 154–179 (2000)

[5] Biane, P.: *Free hypercontractivity.* Comm. Math. Phys. **184** no. 2, 457–474 (1997)

[6] Biane, P.: *Processes with free increments.* Math. Z. **227** no. 1, 143–174 (1998)

[7] Biane, P.; Capitaine, M.; Guionnet, A.: *Large deviation bounds for matrix Brownian motion.* Invent. Math. **152** no. 2, 433–459 (2003)

[8] Biane, P. and Speicher, R.: *Stochastic calculus with respect to free Brownian motion and ananlysis on Wigner space.* Prob. Theory Rel. Fields **112**, 373–409 (1998)

[9] Biane, P.; Speicher, R.: *Free diffusions, free entropy and free Fisher information.* Ann. Inst. H. Poincaré Probab. Statist. **37** no. 5, 581–606 (2001)

[10] Biane, P.; Voiculescu, D.V.: *A free probability analogue of the Wasserstein metric on the trace-state space.* Geom. Funct. Anal. **11** no. 6, 1125–1138 (2001)

[11] Capitaine, M. and Donati-Martin, C.: *Free Wishart processes.* Journal of Theoretical Probability **18**, 413–438 (2005).

[12] Demni, N.: *Free Jacobi process.* Journal of Theoretical Probability **21**, 118–143 (2008)

[13] Gao, M.: *Free Ornstein-Uhlenbeck processes.* Journal of Mathematical Analysis and Applications **322**, 177–192 (2006)

[14] Guionnet, A. and Shlyakhtenko, D.: *Free diffusions and matrix models with strictly convex interaction.* Geom. Funct. Anal. **18** no. 6, 1875–1916 (2009)

[15] Hiai, F.; Petz, D.: *The semicircle law, free random variables and entropy.* Mathematical Surveys and Monographs, 77. American Mathematical Society, Providence, RI (2000)

[16] Janson, S.: *Gaussian Hilbert Spaces.* Cambridge Tracts in Mathematics **129**. Cambridge University Press (1997)
[17] Kümmerer, B.; Speicher, R.: *Stochastic integration on the Cuntz algebra O_∞.* J. Funct. Anal. **103** no. 2, 372–408 (1992)
[18] Kuo, H.H.: *Introduction to stochastic integration.* Universitext. Springer, New York (2006)
[19] Major, P.: *Multiple Wiener-Itô integrals*. Lecture Notes in Math. **849**. Springer-Verlag, Berlin, Heidelberg, New York (1981)
[20] Nica, A. and Speicher, R.: *Lectures on the Combinatorics of Free Probability.* Lecture Notes of the London Mathematical Society **335**. Cambridge University Press (2006)
[21] Nourdin, I. and Peccati, G.: *Stein's method on Wiener chaos.* Probab. Theory Rel. Fields **145**, no. 1, 75–118 (2009)
[22] Nourdin, I. and Peccati, G.: *Stein's method meets Malliavin calculus: a short survey with new estimates.* In the volume: *Recent Development in Stochastic Dynamics and Stochastic Analysis*, World Scientific, 207–236 (2010)
[23] Nourdin, I. and Peccati, G.: *Normal Approximations using Malliavin Calculus: from Stein's Method to Universality.* In preparation.
[24] Nourdin, I.; Peccati, G.; Podolskij, M.: *Quantitative Breuer-Major Theorems.* Preprint.
[25] Nourdin, I.; Peccati. G.; Reinert, G.: *Invariance principles for homogeneous sums: universality of Gaussian Wiener chaos.* Ann. Probab. **38** no. 5, 1947-1985 (2010)
[26] Nualart, D.: *The Malliavin calculus and related topics.* Springer Verlag, Berlin, Second edition (2006)
[27] Nualart, D. and Ortiz-Latorre, S.: *Central limit theorems for multiple stochastic integrals and Malliavin calculus.* Stoch. Proc. Appl. **118** (4), 614-628 (2008)
[28] Nualart, D. and Peccati, G.: *Central limit theorems for sequences of multiple stochastic integrals.* Ann. Probab. **33** (1), 177–193 (2005)
[29] Parthasarathy, K.R.: *An introduction to quantum stochastic calculus.* Monographs in Mathematics **85**. Birkhäuser Verlag, Basel (1992)
[30] Peccati, G. and Taqqu, M.S.: *Wiener Chaos: Moments, Cumulants and Diagrams.* Springer Verlag (2010)
[31] Rüschendorf, L.: *Wasserstein metric.* In Hazewinkel, Michiel, Encyclopaedia of Mathematics, Springer (2001)
[32] Rudin, W.: *Principles of mathematical analysis.* Third edition. International Series in Pure and Applied Mathematics. McGraw-Hill Book Co., New York–Auckland–Düsseldorf (1976)
[33] Surgailis, D.: *CLTs for Polynomials of Linear Sequences: Diagram Formulae with Applications.* In: *Long Range Dependence*. Birkhäuser, Basel, 111-128 (2003)
[34] Takesaki, M. *Conditional expectations in von Neumann algebras.* J. Functional Analysis **9** 306–321 (1972)
[35] Talagrand, M.: *Mean field models for spin glasses: a first course.* In: Lectures on probability theory and statistics (Saint-Flour, 2000), 181–285, Lecture Notes in Math., 1816, Springer, Berlin (2003)
[36] Voiculescu, D.V.: *Symmetries of some reduced free product C^*-algebras.* Operator algebras and their connection with topology and ergodic theory, Springer Lecture Notes in Mathematics **1132**, 556–588 (1985)
[37] Voiculescu, D.V.: *Limit laws for random matrices and free product.* Invent. Math. **104**, 201–220 (1991)
[38] Voiculescu, D.V.: *The analogues of entropy and of Fisher's information measure in free probability theory. I.* Comm. Math. Phys. **155** no. 1, 71–92 (1993)
[39] Voiculescu, D.V.: *The coalgebra of the free difference quotient and free probability.* Internat. Math. Res. Notices no. **2**, 79–106 (2000)
[40] Voiculescu, D.V.; Dykema, K.; Nica, A.: *Free random variables. A noncommutative probability approach to free products with applications to random matrices, operator algebras and harmonic analysis on free groups.* CRM Monograph Series **1**. American Mathematical Society, Providence, RI (1992)

(1) UCSD, San Diego, USA
E-mail address: tkemp@math.ucsd.edu

(2) Université Henri Poincaré, Nancy, France
E-mail address: inourdin@gmail.com

(3) Universtité du Luxembourg, Luxembourg
E-mail address: giovanni.peccati@gmail.com

(4) Queens University & Universität des Saarlandes, Saarbrücken, Germany
E-mail address: speicher@mast.queensu.ca