HAL
open science

Meeting demand variations by using flexible U-shaped assembly lines

Ana Sofia Simaria, Michele Zanella Sá, Pedro Manuel Vilarinho

To cite this version:

Ana Sofia Simaria, Michele Zanella Sá, Pedro Manuel Vilarinho. Meeting demand variations by using flexible U-shaped assembly lines. International Journal of Production Research, 2009, 47 (14), pp.3937-3955. 10.1080/00207540701871044 . hal-00513023

HAL Id: hal-00513023

https://hal.science/hal-00513023v1

Submitted on 1 Sep 2010

HAL is a multi-disciplinary open access archive for the deposit and dissemination of scientific research documents, whether they are published or not. The documents may come from teaching and research institutions in France or abroad, or from public or private research centers.

L'archive ouverte pluridisciplinaire **HAL**, est destinée au dépôt et à la diffusion de documents scientifiques de niveau recherche, publiés ou non, émanant des établissements d'enseignement et de recherche français ou étrangers, des laboratoires publics ou privés.

Meeting demand variations by using flexible U-shaped assembly lines

Journal:	*International Journal of Production Research*
Manuscript ID:	TPRS-2007-IJPR-0258.R1
Manuscript Type:	Original Manuscript
Date Submitted by the Author:	09-Nov-2007
Complete List of Authors:	Simaria, Ana Sofia; University of Aveiro, DEGEI Sá, Michele; University of Aveiro, DEGEI Vilarinho, Pedro; University of Aveiro, DEGEI
Keywords:	ANT COLONY OPTIMISATION, ASSEMBLY LINES, JIT
Keywords (user):	

scholarONE Manuscript Central

International Journal of Production Research, Vol.X, NºX, Month 200x, xxx-xxx

Research article

Meeting demand variations by using flexible U-shaped assembly lines

A. S. SIMARIA†*, M. ZANELLA DE SÁ‡ AND P. M. VILARINHO§

†‡§ Department of Economics, Management and Industrial Engineering, University of Aveiro, 3810-193 Aveiro, Portugal

*Corresponding author. Email: sofiasimaria@ua.pt

Nowadays companies must be able to provide a higher degree of product customisation to fulfil the needs of the increasingly sophisticated customer demand. This can only be achieved by having flexible production systems, able to cope with extended product ranges and with the uncertainty and variability of demand in the current market environment. The purpose of this paper is to present a contribution related to facilities design that accounts for this issue, by presenting flexible U-shaped line configurations for an assembly system. In this type of line, whenever the production volume or product mix changes, the only modification in the line will be the number of operators working in the line, as the physical workstations remain fixed. The relevance of the problem is stated and an heuristic procedure, based on ant colony algorithms, developed to address this problem is described.

For Peer Review Only

The results of the application of the proposed procedure to an assembly line of a major manufacturer of electronic security systems are reported.

Keywords: assembly line balancing; U-lines; ant colony optimisation

For Peer Review Only

1. Introduction

The dynamics and intense competition of today's marketplace coupled with the increased pace of technological change has led to shortening product life cycles and to a growing market demand for customised products, increasing the pressure for industries to diversify their product mix, with more models and optional features being offered. Moreover, responsiveness in terms of short and reliable delivery lead times is demanded by a market where time is seen as a key driver. It is evident the need for flexible systems, able to produce different versions of the same product without a significant increase in the costs. This is the reason for companies using assembly lines configurations, to make their production system suitable for the assembly of different models. Assembly systems must still achieve high productivity, uniform quality and low assembly costs. Flexibility is also essential to cope with shorter product life cycles, low production volumes, changing demand patterns and a higher variety of product models and options. Hence, instead of an inflexible production system, like they have been before, assembly lines are now an important piece of the supply chain, essential to support manufacturing postponement strategies. On one hand, assembly lines have the ideal structure to perform final product customisation tasks under a mass customisation concept. On the other hand, as they are

labour intensive, assembly lines can be easily located geographically closer to the final customer marketplace.

Particularly in assembly lines, when the demand of the products, and consequently the production volume of the line, is highly variable, the lines have to be frequently re-balanced. Whenever a line is re-balanced, the workstations have to be modified, as the equipment for the new tasks has to be installed and operators have to be trained to perform the new sets of tasks. This represents cost for the companies that could be reduced if the lines were easily adaptable to changes in production volumes and product mix.

The purpose of this paper is to present a contribution related to facilities design that accounts for the issues previously described – the design of flexible U-shaped assembly lines. In a flexible U-shaped assembly line, whenever the production volume changes, the workstations remain unchanged (concerning tools and equipment) but the number of operators working on the line and the tasks they perform will be adjusted in order to meet the demand. This way, the required flexibility is attained.

The paper has the following structure. Section 2 describes the main characteristics of U-shaped assembly lines and introduces the concept of line flexibility to respond to changes in demand volumes and/or product mix, typical of *just-in-time* (JIT) production systems. In section 3 the addressed problem, i.e., the problem of designing flexible U-shaped assembly lines, is presented. The heuristic procedure developed to address the problem is described in section 4 and the results of its application to a real world assembly line are presented in section 5. Finally, conclusions and directions for future research are provided in section 6.

For Peer Review Only

2. U-shaped assembly lines

Under the current market environment, assembly systems must be flexible to respond to shorter product life cycles, low to medium production volumes, changing demand patterns and a higher variety of product models and options. At the same time, they must still be able to achieve high productivity and uniform quality at low cost. The implementation of business philosophies such as JIT is a way that companies have to cope with the constant changes in the external competitive environment. JIT suggests the use of multi-skilled workers and efficient facility layouts, so, many companies are rearranging their traditional straight assembly lines into a U-shaped layout (Monden 1993, Scholl and Klein 1999, Aase *et al*. 2004).

In traditional, or straight, assembly lines workstations are physically arranged along a straight conveyor belt and operators perform tasks on a continuous portion of the line. The assembly line balancing problem consists in assigning tasks to workstations in such a way that the demand is met and some cost measure is minimised. Comprehensive literature reviews on procedures for traditional assembly line balancing problems are presented by Gosh and Gagnon (1989), Erel and Sarin (1998), Scholl (1999) and more recently by Becker and Scholl (2006) and Scholl and Becker (2006).

The implementation of JIT principles in industry facilities made companies switching from straight to U-shaped assembly lines. Cheng *et al*. (2000) and Miltenburg and Wijngaard (1994) summarise the main benefits and factors that favour the use of U-shaped assembly lines and explain its popularity among JIT practitioners.

For Peer Review Only

As opposed to traditional assembly lines, modern assembly line operators are expected to have higher skills being capable of performing a wider range of tasks (Bukchin *et al*. 2002). In a U-line both ends of the line are close to each other forming a 'U' and operators can move between the two legs of the line to perform combinations of tasks that would not be allowed in a straight line. The space at the centre of the 'U' is a shared area where operators can communicate, help each other and learn one another's skills. It improves visibility and communication between operators, which may facilitate problem solving. Also, a U-shaped line configuration allows for more possibilities on the assignment of tasks to workstations, so the number of workstations may be reduced, when compared with the number of workstations needed for a straight line. Figure 1 illustrates the differences between the assignment of tasks in straight and U-shaped assembly lines, for a cycle time of 45 time units. A reduction of one operator is observed when turning the layout into U-shaped.

[insert Figure 1 about here]

The advantages of U-shaped assembly lines make this type of system suitable to address the changing structure of the demand concerning volume or product mix. A common practice in Toyota production system is to keep a U-shaped layout and to change (increase or decrease) the number of operators to adapt to demand changes, widening or narrowing the set of tasks assigned to each operator. This principle is called 'Shojinka' meaning 'meeting demand through flexibility' (Monden 1993). To implement this practice it is required a proper design of the machinery/workstations layout, usually in a U-shape, and the use of multi-skilled operators, able to perform a wide range of tasks.

The main focus of the research on U-lines has been on the development of techniques to solve the single model U-shaped assembly line balancing problem. Miltenburg and

For Peer Review Only

Wijngaard (1994) were the first authors to study this problem, followed by other authors like Urban (1998), Scholl and Klein (1999), Erel *et al.* (2001), Aase *et al*. (2003), Guerriero and Miltenburg (2003) and Gökçen and Agpak (2006).

All these studies have confirmed that the U-shaped assembly line balancing problem is a very significant problem for modern assembly systems. However they only deal with single model assembly lines. The mixed-model U-shaped assembly line balancing problem, in which a set of similar products is assembled on the same line, is a more complicated problem to solve, but much more relevant within a context of increasing pressure for manufacturing flexibility and growing demand for customised products. This problem was first described by Sparling and Miltenburg (1998). An additional and very important issue of mixed-model U lines, when compared with single-model ones, is the fact that in the same cycle a workstation may perform its tasks in two different models, one at each leg of the line.Kim *et al*. (2000), Miltenburg (2002) and Kara *et al*. (2007) address simultaneously the problems of balancing and sequencing mixed-model U-lines.

The main difference between the mixed-model assembly line balancing problem and the flexible U-line balancing problem that we propose in this work is related to the physical constraints of the line. While in the former problem typically there are no constraints regarding the equipment and tools used to perform the tasks, in the latter problem we assume that each task is associated with a specific equipment that cannot be moved from the workstation. We make a distinction between workstation (physical place where the task is performed) and operator (the person that performs the task). The problem of designing flexible U-shaped assembly lines is described in the following section with the aid of an illustrative example.

For Peer Review Only

3. Flexible U-shaped assembly line design problem

The problem of designing flexible U-shaped assembly lines is, to the best knowledge of the authors, a new problem that, although it might be often faced by industrial managers, it has been not addressed in the literature. The development of satisfactory line configurations in companies is usually done empirically by trial and error. So, the proposed approach is a very useful tool that explores in a deeper way the range of possible line configurations that can be adopted.

In the addressed problem, a set of similar models (m=1,…, M) can be assembled on the line. Each model has its own set of task precedence relationships, but there is a subset of tasks common to all models: the precedence diagrams of all models can be combined and the resulting one has N tasks (i=1,…, N). The time required to process task i on model m, t_{im}, may vary among models (t_{im}=0 means that model m does not require task i to be assembled). Figure 2 shows an example of a precedence diagram, in this case, a combined diagram for two models, M1 and M2. The task processing times for each model are presented in table 1.

[insert Figure 2 about here]

[insert table 1 about here]

As the demand of each model may change over time, different demand levels, based on the most probable occurrences of demand volumes, are set for each model – D_{mv} is the demand of model m for level v, for a set planning horizon. For the numerical example, two demand

For Peer Review Only

levels are expected for each model, so, a total of four scenarios (A, B, C, D) are considered. These values are given in table 2.

[insert table 2 about here]

The goal of the addressed problem is to design an assembly line flexible enough to cope with the different demand scenarios. The line is composed by a set of physical workstations with tools and equipment required to execute the set of tasks assigned to each workstation. Given the assignment of tasks to the workstations, it is necessary to assign operators (workers) to the line and determine which tasks each operator will perform. The number of operators working on the line is determined by the required production rate. Higher production rates involve lower cycle times and, consequently, a larger number of operators, in order to meet the demand.

According to Monden (1993) a flexible assembly system allows the adjustment to different demand volumes by simply reassigning the human resources, i.e., increasing or decreasing the number of operators in the line and defining the new set of tasks that each one has to execute. The operators are multi-skilled, meaning that they are able to perform a wide range of tasks. Also, an appropriate workstations' layout is required in order to effectively implement this practice; usually, U-shaped layouts are used.

Based on these assumptions, the addressed problem has two levels of decision:

(i) Level 1 – determine an assignment of tasks to physical workstations (and the corresponding equipment/tools) guaranteeing that the line is able to cope with the worst case demand scenario, i.e., the scenario where the production rate is maximum.

For Peer Review Only

(ii) Level 2 – For each probable demand scenario, determine an assignment of operators to the tasks/workstations in a U-shaped layout, according to the configuration defined in level 1.

A solution of the problem will consist in a fixed configuration of workstations, arranged in a U-shaped layout, each equipped with the necessary tools to perform the tasks assigned to it, and in a set of assignments of operators to tasks, one for each demand scenario.

The following section presents the procedure developed to address this problem.

4. Proposed procedure

The proposed procedure is based on ANTBAL, an ant colony algorithm based procedure previously developed by the authors (Vilarinho and Simaria 2006), which aims to solve the mixed-model assembly line balancing problem. The interested reader is referred to that work, where a detailed description of the features of the algorithm is presented. In the present paper, only the adaptation of ANTBAL to address the problem on hand is described, however, a brief summary is provided in Appendix.

The procedure works in two stages, one to address each of the decision levels described in the previous section.

4.1 First stage

The first stage aims at finding an assignment of tasks to workstations, in such a way that the line is able to respond to all the demand scenarios. This means that the number of installed workstations should be sufficient for the line to attain the maximum production rate (of all the probable demand scenarios). Given a set of models and levels of demand the

For Peer Review Only

procedure starts by identifying the worst case scenario, i.e., the demand scenario that would require the maximum number of workstations on the line. According to the demand volume, each scenario requires the assembly line to be operated with a determined cycle time, i.e., the time elapsed between two consecutive units of finished product in the end of the line. For each scenario (model m – demand level v), the required cycle time of the line is given by $C_{mv} = H/D_{mv}$, where H is the planning horizon and D_{mv} is the demand volume of model m for level v during the planning horizon. The lower bound of the number of workstations is, then, computed as follows:

$$LB_{mv} = \left\lceil \sum_{i=1}^{N} t_{im} \Big/ C_{mv} \right\rceil \tag{1}$$

The lower bound (LB) on the number of workstations does not take into account the precedence relationships between the tasks nor the non-divisibility aspect of tasks. However, the goal is to compare the values of LB of the different demand scenarios and since they have the same task precedence structure (the combined precedence diagram) and similar task processing times, the main difference in the LB values will be due to the different cycle time values. Table 3 presents the cycle time and LB values for the different scenarios of the numerical example, considering a planning horizon of 480 time units.

[insert table 3 about here]

The scenario with the maximum value of LB is selected and, using the data of this scenario, a single-model assembly line balancing problem is solved to determine the best assignment of tasks to workstations (the decision of level 1). The proposed procedure is based on the

For Peer Review Only

previously developed ANTBAL (see Appendix), adapted to single-model assembly line balancing problems with no parallel workstations.

The objective function takes into account the goals of minimising idle time and balancing the workloads between workstations. The first goal is equivalent to the maximisation of the line efficiency: E is the line efficiency for model m and demand level v, which is given by:

$$E = \frac{\sum_{i=1}^{N} t_{im}}{S \cdot C_{mv}} \tag{2}$$

In this stage, the selected model and demand level are the ones of the demand scenario the corresponding to the maximum value of LB, i.e., the demand scenario which theoretically will need the highest number of workstations. For the numerical example, scenario A is selected and a cycle time of 16.6 time units is used to solve the problem.

The goal of balancing the workloads between the workstations is reached by the minimisation of function B: idle time balance. This function varies in the range [0,1] reaching a minimum of zero when the line idle time is equally distributed by all workstations and a maximum of one if the line idle time is only due to one workstation. Function B is given by:

$$B = \frac{S}{S-1} \sum_{k=1}^{S} \left(\frac{d_k}{IT} - \frac{1}{S} \right)^2 \tag{3}$$

where d_k is the idle time of workstation k and IT is the total idle time of the line (i.e., the sum of all d_k).

The global objective function takes into account the values of E and B, however it is obvious that E is the most important goal because it directly addresses the minimisation of the number of workstations. For this reason, it is multiplied by a user defined parameter (λ)

For Peer Review Only

that should be set $\lambda > 1$. As the criterion of the global objective function is maximisation, the symmetric value of function B (defined by equation (3)) has to be considered. This way, the objective function Z to maximise is given by

$$Z = \lambda E - B \tag{4}$$

All the other features of the algorithm are similar to the ones described in Vilarinho and Simaria (2006) and will not be repeated in the present paper. The interested reader is therefore referred to that work or may directly contact the authors for further details. The best solution of the first stage of the procedure for the numerical example is a line configuration with 10 workstations. The set of tasks assigned to each workstation and the physical line configuration is presented in Figure 3.

[insert Figure 3 about here]

The assignment of tasks to the physical workstations defines the equipment and tools that should be available at each workstation. In order to minimise the changes in the line whenever the demand scenario changes, we assume that the physical part of the line should remain fixed. Therefore, the only changes in the line will be the range of tasks performed by the (human) operators which may increase or decrease the total number of operators working on the line. The definition of the best assignment of operators for each demand scenario is done in the second stage of the proposed procedure.

4.2 Second stage

The goal of the second stage is to determine an assignment of operators to tasks such that the line configuration task/workstation defined in the first stage is maintained and a

For Peer Review Only

U-shaped layout is used. The second stage is repeated for every demand scenario of the problem.

The existing procedure ANTBAL was modified in order to produce solutions that meet the constraints of the problem, i.e., to produce assignments of operators to tasks/workstations (given by the solution of the first stage) in a U-shaped line layout. Given a fixed assignment of tasks to workstations (from the first stage) the goal of the new procedure, which will be called U-ANTBAL, is, for each demand scenario, to assign human operators to the tasks in such a way that an operator can work on both ends of the U-shaped line. The main difference between U-ANTBAL and ANTBAL is in the determination of the set of available tasks. In U-ANTBAL, a task is available to be assigned to an operator if

(i) it verifies task-workstation assignments of first stage;

(ii) all its predecessors or all its successors are already assigned to an operator – this allows the assignment of an operator to tasks at both ends of the line, i.e., in a U-shaped layout;

(iii) the assignment of the task does not exceed the operator's capacity – the capacity of an operator is the cycle time for the specific demand scenario.

For the worst case scenario, i.e., the scenario used in the first stage of the procedure, the solution of the second stage will have one operator performing all the tasks of a workstation, as the cycle time used in both stages is the same. For the remaining demand scenarios, there will be less operators than workstations, however, in some cases there might be more than one operator assigned to the same workstation. As this situation may cause congestion and confusion among the operators it is desirable to minimise the probability of its occurrence. The procedure addresses this issue in two ways. First, when

For Peer Review Only

building the solution, it first assigns the operator to all the tasks of a determined workstation before it changes into another workstation. The second way is to add a term in the objective function computing the average number of operators per workstation (*P*'), given by:

$$P' = \frac{\sum_{k=1}^{S} P_k}{S} \tag{5}$$

where P_k is the number of operators working on workstation k and S is the total number of workstations.

While the two terms of objective function of the first stage are the minimisation of the number of workstations and the workload balance between the workstations, the correspondent terms in the objective function of the second stage are related with the operators. E^{op} is the operator line efficiency for model m and demand level v, given by:

$$E^{op} = \frac{\sum_{i=1}^{N} t_{im}}{P \cdot C_{mv}} \tag{6}$$

Similarly to the first stage, the goal of balancing the workloads between operators is reached by the minimisation of function B^{op}, which varies between a minimum of zero, when the line idle time is equally distributed by all operators and a maximum of one when the line idle time is only due to one operator. Function B^{op} is given by:

$$B^{op} = \frac{P}{P-1} \sum_{o=1}^{P} \left(\frac{d_o}{IT} - \frac{1}{P} \right)^2 \tag{7}$$

For Peer Review Only

where d_o is the idle time of operator o. The global objective function to maximise in the second stage is then:

$$Z = \lambda E^{op} - B^{op} - P' \tag{8}$$

All the other features of the algorithm are similar to the ones of ANTBAL (Vilarinho and Simaria 2006).

The best solutions obtained in the second stage for each demand scenarios of the numerical example are presented in Figure 4. As one can observe, the assignment of tasks to the physical workstations is fixed being the various demand scenarios met by the different allocation of human operators.

[insert Figure 4 about here]

5. Computational experience

The procedure was coded in Visual C++ and run on a 1000 MHz Pentium III computer. A direct comparison of its performance against other heuristics was not possible, as, to the best knowledge of the authors, this is the first approach to the problem of designing flexible U-lines.

So, the heuristic was tested on a set of ten problems developed by the authors. The precedence diagrams used for the test problems were taken from Scholl (1999), except for problems 1 and 6 (taken from the numerical example of section 3). Problems 1 to 5 have the four demand scenarios shown in table 3 and problems 6 to 10 have six demand scenarios, given in table 4

For Peer Review Only

The results of the computational tests are summarised in table 5, where, for each scenario, the following information is presented: *UB* E^{op} – upper bound on the operator efficiency, computed using the lower bound on the number of operators; *Av* E^{op} – the average value of E^{op} for ten runs of the procedure; *Imp* B^{op} and *Imp P'* – the average improvement values of B^{op} and P' during the algorithm.

[insert table 4 about here]

[insert table 5 about here]

For 33 scenarios the obtained value of E^{op} was equal to the upper bound, meaning that the algorithm reached the optimal solution regarding the number of operators. For the other instances the heuristic performance was also good: the worst deviation between the obtained solutions and the upper bound occured in scenario D of problem 4. The upper bound is 1.0 while the obtained value is 0.87. However, this value corresponds to a line balancing solution with eight operators, only one operator more that the lower bound which, if feasible, would allow a operator efficiency of 100%. Due to the indivisible nature of tasks, this situation would be very unrealistic to occur. So, one can conclude that the heurist perform very well in terms of line efficiency. As for the other addressed objectives, the results show that there is always a slight improvement in the values of B^{op} and P'. The maximum running time of the procedure was 115 seconds for the largest sized problem, which is acceptable due to the strategic nature of the problem on hand.

For Peer Review Only

6. Real world application

The recent acquisition of the company, in which the study took place, by a large group led to the implementation of the group's business philosophy concerning management and production issues. One of these issues is the flexibility of production systems to cope with the uncertainty and variability of demand in the current market environment. Trying to achieve this flexibility, the philosophy supports the use of U-shaped assembly lines. Within this scope, the goal of this study was to analyse the performance of one of the assembly lines of the company (a major manufacturer of electronic security systems) and propose changes in its configuration in order to improve its flexibility.

The assembly line produces two models of a product in a straight line configuration. When the production volume is low, the assignment of operators to workstations (with specific equipment required to perform the tasks) increases the distances between workstations which impacts negatively the flow in the line. Also, it is difficult to have multi-skilled workers, able to perform tasks in several workstations when these are physically distant from each other. Another problem with the actual assembly line is the unbalance of workloads between workstations. While some operators have high workloads others have long idle times and because workstations are distant, they cannot help each other and smooth the workload. The original line was designed to assemble a different product that no longer exists, so the facilities were adapted in order to assemble other types of products. This somehow explains the poor performance of the line.

The demand of the product, and consequently the production volume of the line, is highly variable which forces the line to be frequently re-balanced. Whenever the line is re-balanced, the workstations have to be modified, as the equipment for the new tasks has

For Peer Review Only

to be installed, and operators have to be trained to perform the new set of tasks. This represents increased costs for the company that could be avoided if the line was easily adaptable to changes in production volumes.

The problem faced by this particular company was actually the motivation of the authors for starting the study of the problem of designing flexible U-shaped assembly lines. Therefore, the procedure described in the previous sections was developed and applied to this particular line with a small, but significant (in practical terms) modification. After running the procedure for a few times it was observed that the solutions placed in the same workstations tasks which were performed in different sub-assemblies of the product. Due to the size of the different parts it was not desirable that they were handled in the same workstation, as the space was limited. This problem was solved by adding negative zoning constraints which forbid the assignment of determined tasks to the same workstation. Figure 5 shows the combined precedence diagram of the assembly process as well as the different sets of tasks that belong to a specific group (sub-assemblies, pre-test, final test, packaging). All the tasks belonging to a group should be assigned to the same workstation, if possible (depending on cycle time constraints), and must not be assigned together with tasks belonging to other groups. Tasks that do not belong to any group may be assigned anywhere, as long as precedence constraints are not violated.

[insert Figure 5 about here]

The most typical demand scenarios for the two models are presented in table 6 and the best solution obtained by the proposed procedure is shown in Figure 6. Note that the individual tasks are not represented to simplify the picture.

[insert table 6 about here]

For Peer Review Only

[insert Figure 6 about here]

These solutions were useful to perform a comparison with the actual system, where a straight assembly line was used. This comparison is shown in table 7. As it can be observed, substantial improvements occurred when changing the configuration of the line from straight to U-shaped. Not only the flexibility of the line, in the spirit of JIT, increased but also its efficiency was improved, as the number of operators working on the line was reduced in three of the four scenarios. Besides the reduction of the number of operators, an actual increase of the number of produced units was possible in some cases due to the better balance of workloads between workstations.

[insert table 7 about here]

The maximum running time of the algorithm was only four minutes, which is acceptable due to the strategic nature of the problem on hand.

7. Conclusions

In this paper, the problem of designing flexible U-shaped assembly lines under a JIT philosophy was addressed. To the best knowledge of the authors this is a new problem that, although it might be often faced by industrial manufacturers, it has not been addressed in the literature. The development of satisfactory line configurations in companies is usually done empirically by trial and error. So, the proposed approach is a very useful tool that explores in a deeper way the range of possible line configurations that can be adopted.

Also, the problem itself is of extreme importance under the current market environment, where more and more companies are adopting manufacturing postponement strategies, i.e, the shipping of products in a semi-finished state from the manufacturing facility to a

For Peer Review Only

downstream facility where final customisation occurs, normally as an assembly process. This strategy allows companies to standardise components and create a variety of products in a very efficient way.

The proposed approach allows the implementation of the Toyota's principle 'meeting demand through flexibility' (Monden 1993), as it adjusts the number of operators working on the line to meet demand variations. Computational experiments proved a goood performance of the procedure and it was also applied to a real world assembly line where significant improvements were observed in the efficiency of the system.

Further developments should be made to fine-tune and improve the performance of the procedure. Nevertheless, the great importance of the addressed problem under the current market environment and the success of the application to a real case are a valuable contribution of this paper.

Acknowledgements

The authors are grateful for the constructive feedback they received from the anonymous referees. This research was supported by the National Foundation for Science and Technology (FCT, Portugal) and FEDER (POCI/ECO/60356/2004).

Appendix

ANTBAL is an ant colony algorithm based procedure developed by Vilarinho and Simaria (2006) to address mixed-model assembly line balancing problems. An outline of the procedure is shown in figure A.1. ANTBAL begins by creating a sub-colony with *N* ants. Each ant in the sub-colony builds a feasible balancing solution, i.e. an assignment of tasks

For Peer Review Only

to workstations that satisfies precedence, zoning and capacity constraints. For each feasible solution obtained a measure of its quality is computed, according to the problem's objective function. After all ants of a sub-colony have generated a solution, they release a certain amount of pheromone according to the quality of the solution. Pheromone trails are kept in a matrix *task*×*task*. If task *j* is performed immediately after task *i*, then a certain amount of pheromone is released between task *i* and task *j*. In this way, pheromone trails are built in the paths used by the ants to build the balancing solution.

The procedure is repeated for every sub-colony within the ant colony. The best solution found by the procedure is updated after each sub-colony's iteration.

[insert figure A.1 about here]

Figure A.2 presents the procedure carried out by an ant to build a feasible balancing solution. An ant begins by determining the available tasks for assignment to the current workstation, taking into account the problems constraints: (i) precedence constraints, (ii) zoning constraints and (iii) capacity constraints. Then, from the set of available tasks, selects one of these tasks. When there are no available tasks to assign to the current workstation, a new workstation is opened. This procedure is repeated until all the tasks have been assigned.

[insert figure A.2 about here]

The procedure for selecting a task for assignment is described in the following paragraphs.

The probability of a task being selected, from the set of available tasks, is a function of: i) the pheromone trail intensity between the previously selected task and each available task, and ii) the information provided by the heuristic for each available task. This information is

For Peer Review Only

a priority rule that is randomly assigned to each ant when the respective sub-colony is generated. The procedure uses some common static priority rules for the assembly line balancing problem (e.g., maximum positional weight, maximum processing, maximum number of successors) and a new dynamic priority rule called 'last task becoming available', which was developed and included in the algorithm. The values of the priority rules will vary between 1 for the task with lowest priority and *I* (number of tasks) for the task with highest priority, and will be the heuristic information used by the ants to select the tasks.

Let *r* be a random number between 0 and 1 and r_1, r_2 and r_3 three user-defined parameters such that $0 \le r_1, r_2, r_3 \le 1$ and $r_1 + r_2 + r_3 = 1$. An ant *n* which has selected task *i* in the previous iteration will select task *j* by applying the following rule:

$$j = \begin{cases} J_1 = \arg\max_{j \in A_i^n} \left\{ [\tau_{(i,j)}]^\alpha [\eta_j]^\beta \right\} & \text{if } r \le r_1 \quad (\textit{exploitation}) \\ J_2 : p_{(i,J_2)} = \dfrac{[\tau_{(i,J_2)}]^\alpha [\eta_{J_2}]^\beta}{\sum_{j \in A_i^n} [\tau_{(i,j)}]^\alpha [\eta_j]^\beta} & \text{if } r_1 < r \le r_1 + r_2 \quad (\textit{biased exploration}) \\ J_3 : \text{random selection of } j \in A & \text{if } r_1 + r_2 < r \le r_1 + r_2 + r_3 \quad (\textit{random selection}) \end{cases} \quad \text{(A.1)}$$

where $\tau_{(i,j)}$ is the pheromone trail intensity in the path "selecting task *j* after selecting task *i*", η_j is the heuristic information of task *j* (e.g. the priority rule value for task *j*), A_j^n is the set of available tasks for ant *n* after the selection of task *i* and α and β are parameters that determine the relative importance of pheromone intensity versus heuristic information.

The selection of a task from the set of available tasks is performed by one of three strategies:

For Peer Review Only

(i) Exploitation: it determines the selection of the best task according to the values of $[\tau_{(i,j)}]^{\alpha}[\eta_j]^{\beta}$.

(ii) Biased exploration: a task is selected with a probability of $p_{(i,j)}$ as given by J_2 in equation (A.1).

(iii) Random selection: from the set of available tasks, the ant selects one at random.

The first two strategies are based on the Ant Colony System state transition rule proposed by Dorigo and Gambardella (1997). After the task is selected, the ant assigns it to the current workstation. When all tasks have been assigned to workstations, the balancing solution is completed and solution quality measures are computed.

The pheromone release strategy is based on the one used by Dorigo *et al*. (1996). At the end of each sub-colony iteration, all balancing solutions provided by the ants have their objective function values computed. It is at this point that the pheromone trail intensity is updated. First, a portion of the existing pheromone value is evaporated in all paths, according to:

$$\tau_{(i,j)} \leftarrow (1-\rho)\cdot\tau_{(i,j)} \tag{A.2}$$

where ρ is the evaporation coefficient ($0 \le \rho \le 1$). Then, each ant n releases an amount of pheromone in the paths used to build the task sequence, according to the corresponding balancing solution quality. This amount of pheromone is given by:

$$\Delta\tau^{n}{}_{(i,j)} = \begin{cases} Z, \text{if in the solution built by ant } n \text{ task } j \text{ is performed} \\ \quad \text{immediatly after task } i \\ 0, \text{otherwise} \end{cases} \tag{A.3}$$

The overall pheromone update effect of all ants in each path *(i,j)* is then:

For Peer Review Only

$$\tau_{(i,j)} \leftarrow \tau_{(i,j)} + \sum_{n=1}^{N} \Delta\tau^{n}{}_{(i,j)} \qquad \text{(A.4)}$$

At the beginning of the procedure, an initial amount of pheromone (τ_0) is released in every path.

References

Aase, G.R., Schniederjans, M.J and Olson, J.R., U-OPT: an analysis of exact U-shaped line balancing procedures. *International Journal of Production Research*, 2003, **41**, 4185-4210.

Aase, G.R., Olson, J.R. and Schniederjans, M.J., U-shaped assembly line layouts and their impact on labour productivity: an experimental study. *European Journal of Operational Research*, 2004, **156**, 698-711.

Becker, C. and Scholl, A., A survey on problems and methods in generalized assembly line balancing. *European Journal of Operational Research*, 2006, **168**, 694-715.

Bukchin, J., Dar-El, E.M. and Rubinovitz, J., Mixed model assembly line design in a make-to-order environment. *Computers and Industrial Engineering*, 2002, **41**, 405-421.

Cheng, C.H., Miltenburg, J. and Motwani, J., The effect of straight- and u-shaped lines on quality. *IEEE Transactions on Engineering Management*, 2000, **47**, 321-334.

Dorigo, M., Maniezzo, V. and Colorni, A., The Ant System: Optimisation by a colony of cooperating agents. *IEEE Transactions on Systems, Man and Cybernetics – Part B*, 1996, **26**, 1-13.

For Peer Review Only

Dorigo, M. and Gambardella, L. M., Ant Colony System: A cooperative learning approach to the travelling salesman problem. *IEEE Transactions on Evolutionary Computation*, 1997, **1**, 53-66.

Erel, E., Sabuncuoglu, I. and Aksu, A., Balancing of U-type assembly systems using simulated annealing. International *Journal of Production Research*, 2001, **39**, 3003-3015.

Erel, E. and Sarin, S.C., A survey of the assembly line balancing procedures. *Production Planning and Control*, 1998, **9**, 414-434.

Ghosh, S. and Gagnon, R.J., A comprehensive literature review and analysis of the design, balancing and scheduling of assembly systems. *International Journal of Production Research*, 1989, **27**, 637-670.

Gökçen, H. and Agpak, K., A goal programming approach to simple U-line balancing problem. *European Journal of Operational Research*, 2006, **171**, 577-585.

Guerriero, F. and Miltenburg, J., The stochastic U-line balancing problem. *Naval Research Logistics*, 2003, **50**, 31-57.

Kara, Y., Ozcan, U. and Peker, A., An approach for balancing and sequencing mixed-model JIT U-lines. *International Journal of Advanced Manufacturing Technology*, 2007, **32**, 1218-1231.

Kim, Yeo Keun, Kim, Sun Jin and Kim, JaeYun, Balancing and sequencing mixed-model U-lines with a co-evolutionary algorithm. *Production Planning and Control*, 2000, **11**, 754-764.

Miltenburg, J., Balancing and scheduling mixed-model U-shaped production lines. *The International Journal of Flexible Manufacturing Systems*, 2002, **14**, 119-151.

For Peer Review Only

Miltenburg, J. and Wijngaard, J., The U-line line balancing problem. *Management Science*, 1994, **40**, 1378-1388.

Monden, Y., *Toyota Production System* (Institute of Industrial Engineers, Norcross), 1993.

Scholl, A., *Balancing and Sequencing of Assembly Lines* (Physica-Verlag, Heidelberg), 1999.

Scholl, A. and Becker, C., State-of-the-art exact and heuristic solution procedures for simple assembly line balancing. *European Journal of Operational Research*, 2006, **168**, 666-693.

Scholl, A. and Klein, R., ULINO: Optimally balancing U-shaped JIT assembly lines. *International Journal of Production Research*, 1999, **37**, 721-736.

Sparling, D. and Miltenburg, J., The mixed-model U-line balancing problem. *International Journal of Production Research*, 1998, **36**, 485-501.

Urban, T.L. (1998) Note. Optimal balancing of U-shaped assembly lines. *Management Science*, 44, 738-741.

Vilarinho, P.M. and Simaria, A.S., ANTBAL: an ant colony optimization algorithm for balancing mixed-model assembly lines with parallel workstations. *International Journal of Production Research*, 2006, **44**, 291-303.

For Peer Review Only

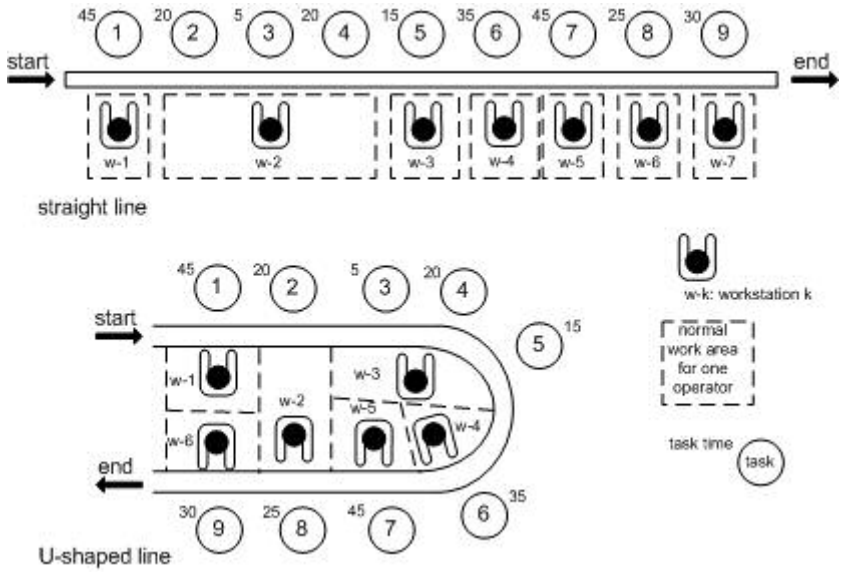

Figure 1. Assignment of tasks in straight and U-shaped assembly lines

Review Only

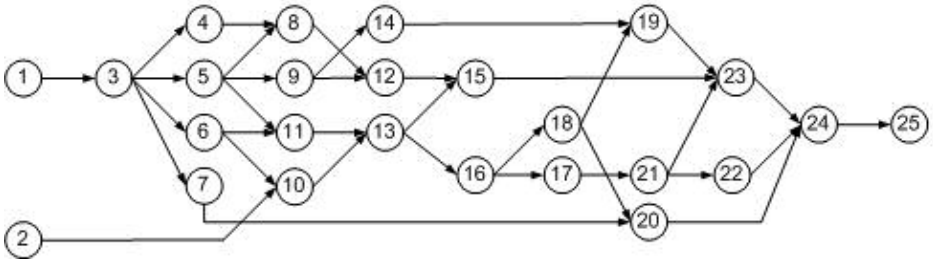

Figure 2. Combined precedence diagram for the numerical example

Peer Review Only

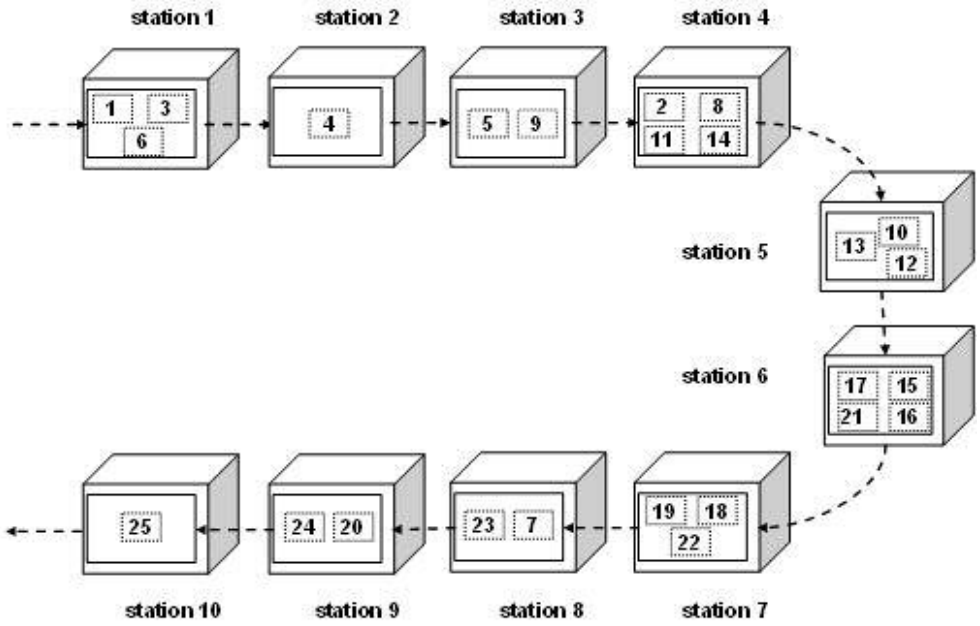

Figure 3. Physical configuration of the line (best solution of first stage)
136x89mm (96 x 96 DPI)

eview Only

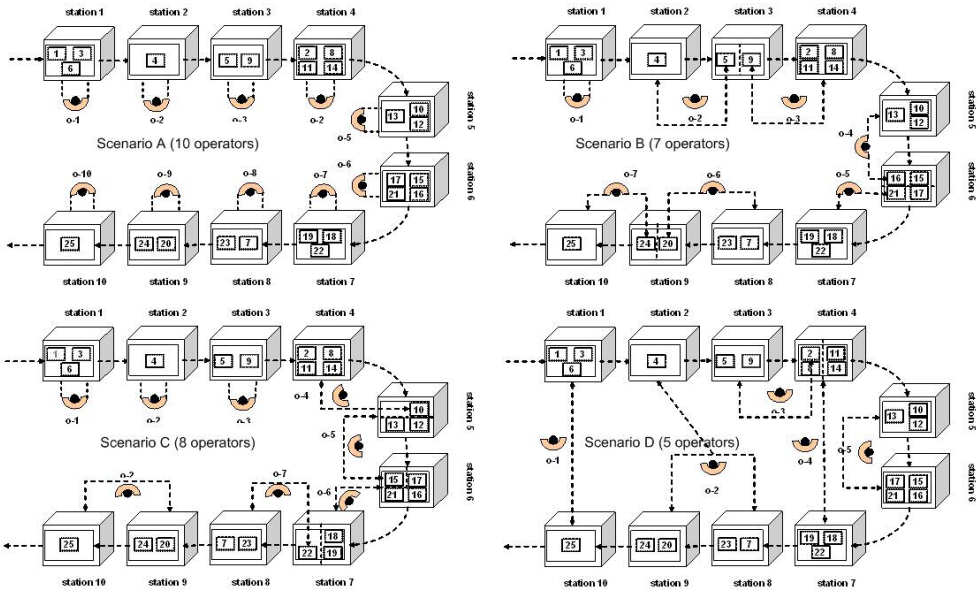

Figure 4. Assignment of operators to tasks for the different scenarios (best solution of second stage)

For Review Only

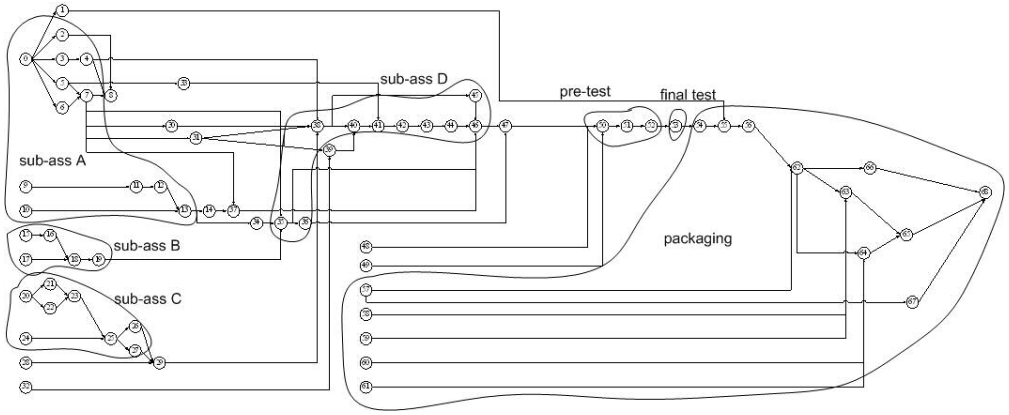

Figure 5. Precedence diagram of the real world application

For Peer Review Only

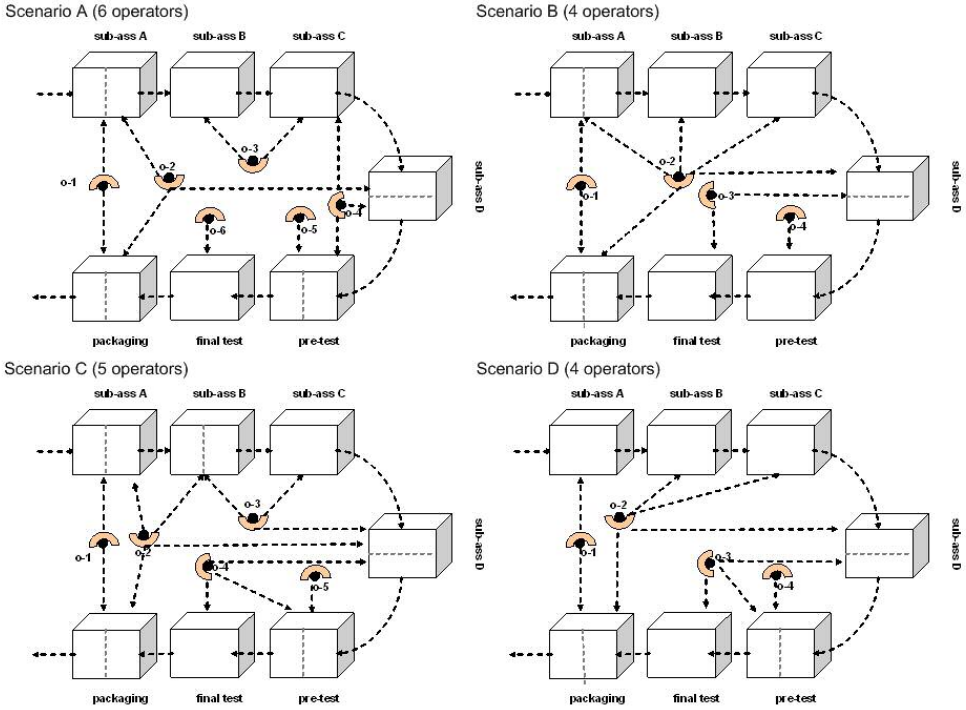

Figure 6. Results of the procedure for the real world application

View Only

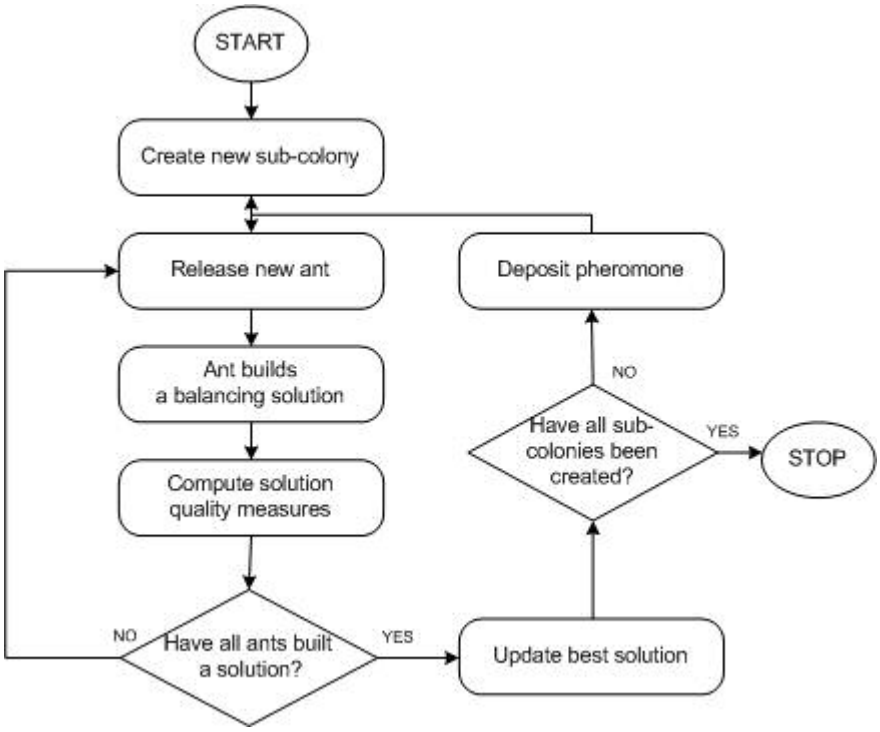

Figure A.1. Outline of ANTBAL

View Only

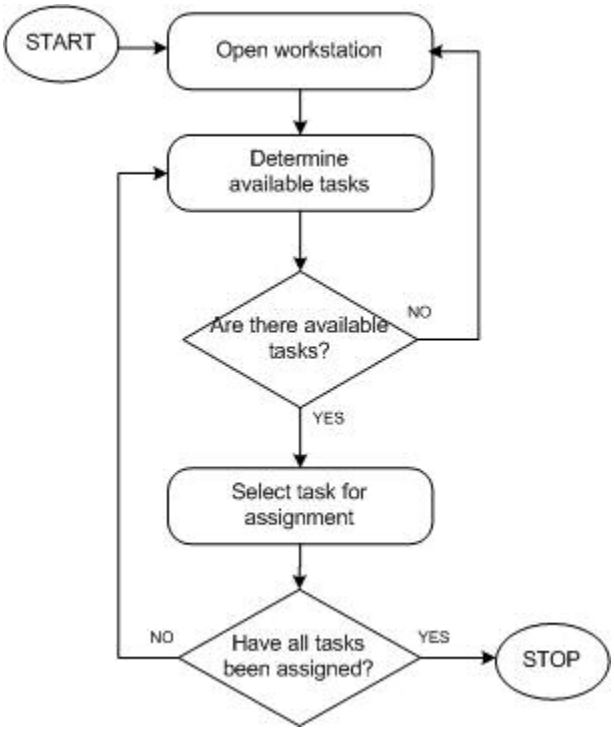

Figure A.2. Procedure for building feasible balancing solutions

View Only

Table 1. Task processing times for the two models (M1 and M2) of the numerical example

Task	t M1	t M2	Task	t M1	t M2
1	2.9	0	14	1.3	1.2
2	7.7	8.7	15	5.5	4.6
3	7.3	7.6	16	1.9	1.9
4	15,0	14.7	17	3.7	3,0
5	8.8	11.1	18	9.4	10,0
6	6.2	7.2	19	1.3	1.4
7	3.6	4.6	20	7.4	0
8	1.7	0	21	2,0	1.7
9	6.6	5.7	22	4.7	4.4
10	2.5	2.7	23	9.6	7.2
11	5.5	5.8	24	4.1	3.1
12	7.1	6.8	25	12.5	14.7
13	5.9	7.5			

For Peer Review Only

Table 2. Demand scenarios for the numerical example

Scenario	Model	Demand
A	M1	29
B	M1	20
C	M2	25
D	M2	15

For Peer Review Only

Table 3. Cycle time and lower bounds for the different demand scenarios of the numerical example

Scenario	Cycle time	LB number workstations
A	16.6	9
B	24.0	6
C	19.2	8
D	32.0	5

For Peer Review Only

Table 4. Cycle time scenarios for problems 6 to 10

Scenario	Model	Cycle time
A	M1	16.0
B	M1	32.0
C	M1	48.0
D	M2	17.1
E	M2	26.7
F	M2	60.0

For Peer Review Only

Table 5. Computational results

Problem	Scenario A				Scenario B				Scenario C				Scenario D			
	UB E^{op}	*Av* E^{op}	*Imp* B^{op}	*Imp P'*	*UB* E^{op}	*Av* E^{op}	*Imp* B^{op}	*Imp P'*	*UB* E^{op}	*Av* E^{op}	*Imp* B^{op}	*Imp P'*	*UB* E^{op}	*Av* E^{op}	*Imp* B^{op}	*Imp P'*
1 (25 tasks)	.97	.87	.32	.22	.86	.86	.29	.34	.88	.88	.26	.27	.85	.85	.48	.55
2 (30 tasks)	.94	.94	.24	.26	.98	.98	.26	.24	.90	.90	.40	.32	.87	.87	.12	.35
3 (35 tasks)	.97	.90	.14	.22	.90	.90	.12	.29	.98	.89	.49	.21	.98	.98	.47	.10
4 (45 tasks)	.95	.89	.12	.14	.92	.92	.33	.20	.97	.90	.27	.18	1	.87	.29	.27
5 (70 tasks)	.96	.92	.24	.11	.99	.93	.15	.21	1	.91	.12	.22	1	.92	.30	.25

Problem	Scenario A				Scenario B				Scenario C				Scenario D				Scenario E				Scenario F			
	UB E^{op}	*Av* E^{op}	*Imp* B^{op}	*Imp P'*	*UB* E^{op}	*Av* E^{op}	*Imp* B^{op}	*Imp P'*	*UB* E^{op}	*Av* E^{op}	*Imp* B^{op}	*Imp P'*	*UB* E^{op}	*Av* E^{op}	*Imp* B^{op}	*Imp P'*	*UB* E^{op}	*Av* E^{op}	*Imp* B^{op}	*Imp P'*	*UB* E^{op}	*Av* E^{op}	*Imp* B^{op}	*Imp P'*
6 (25 tasks)	.90	.90	.13	.21	.90	.90	.20	.38	.75	.75	.12	.22	.99	.88	.33	.19	.85	.85	.07	.12	.75	.75	.36	.18
7 (30 tasks)	.98	.88	.22	.18	.88	.88	.24	.31	.98	.98	.35	.06	.90	.90	.08	.13	.86	.86	.05	.15	.77	.77	.08	.42
8 (35 tasks)	.93	.93	.17	.21	.86	.86	.07	.34	.81	.81	.03	.30	.92	.92	.18	.23	.88	.88	.43	.09	.79	.79	.16	.12
9 (45 tasks)	.99	.92	.24	.17	.99	.87	.17	.44	.92	.92	.34	.38	.93	.93	.18	.22	.93	.93	.28	.21	.93	.93	.10	.29
10 (70 tasks)	.99	.92	.16	.25	.99	.92	.23	.25	.99	.88	.16	.22	.97	.89	.07	.21	.96	.96	.17	.18	.91	.91	.12	.19

For Peer Review Only

Table 6. Demand scenarios for the real assembly line

Scenario	Model	Demand
A	M1	155
B	M1	105
C	M2	115
D	M2	85

For Peer Review Only

Table 7. Comparison between U-shaped and actual configurations for the real assembly line

	U-shaped line	Straight line
Scenario A		
number of operators	6	6
number of units/hour	18.6	18.6
efficiency	87.4%	87.4%
Scenario B		
number of operators	4	5
number of units/hour	12.8	12.6
efficiency	11.1%	28.9%
Scenario C		
number of operators	5	6
number of units/hour	13.8	13.9
efficiency	11.5%	26.3%
Scenario D		
number of operators	4	5
number of units/hour	10.3	10.3
efficiency	18.3%	34.6%

For Peer Review Only