HAL open science

Design of Minimal Fault Tolerant Networks: Asymptotic Bounds

Omid Amini, Jean-Claude Bermond, Frédéric Giroire, Florian Huc, Stéphane Pérennes

To cite this version:

Omid Amini, Jean-Claude Bermond, Frédéric Giroire, Florian Huc, Stéphane Pérennes. Design of Minimal Fault Tolerant Networks: Asymptotic Bounds. Algotel06, May 2006, Tregastel, France. pp.169-174. hal-00512287

HAL Id: hal-00512287

https://hal.science/hal-00512287v1

Submitted on 29 Aug 2010

HAL is a multi-disciplinary open access archive for the deposit and dissemination of scientific research documents, whether they are published or not. The documents may come from teaching and research institutions in France or abroad, or from public or private research centers.

L'archive ouverte pluridisciplinaire **HAL**, est destinée au dépôt et à la diffusion de documents scientifiques de niveau recherche, publiés ou non, émanant des établissements d'enseignement et de recherche français ou étrangers, des laboratoires publics ou privés.

Design of Minimal Fault Tolerant Networks: Asymptotic Bounds

O. Amini[1] and J-C. Bermond[1] and F. Giroire[2] and F. Huc[1] and S. Perennes[1]

[1]*Projet Mascotte, CNRS/INRIA/UNSA, INRIA Sophia-Antipolis, 2004 route des Lucioles BP 93, 06902 Sophia-Antipolis Cedex, France*
[2]*Projet Algorithmes, INRIA Rocquencourt, F-78153 Le Chesnay, France*

This paper deals with the design of on board networks in satellites (also called Traveling wave tube Amplifiers (TWTA)). These networks should connect signals arriving on some ports of the satellite to amplifiers, even in case of failures of some amplifiers. They are made of links and expensive switches each with 4 links. So, the aim is to design networks having as few switches as possible and satisfying the following property: *there exist p edge-disjoint paths from the p signals arriving on $p+\lambda$ ports (inputs) to any set of p amplifiers (outputs) chosen from the $p+k$ total number of outputs*. We call such networks *valid (p,λ,k)-networks* and want to determine the minimum number of switches $\mathcal{N}(p,\lambda,k)$ of such networks. By symmetry we suppose $\lambda \leq k$. We give tight results for small values of k and asymptotic results when $k = O(\log p)$ which are tight when $k = \Theta(\lambda)$ and when $\lambda = 0$.

Keywords: key words : fault tolerant networks, switching networks, routing, TWTA redundancy, expanders, connectivity, disjoint paths.

1 Introduction

Problem and Motivation. The problem we consider here was asked by Alcatel Space Industry. Signals incoming in a telecommunication satellite have to be routed through an on-board network to amplifiers. (The satellites under consideration are for example used for TV and video transmission (like the Eutelsat or Astra series) as well as for private application. This network consists of switches with 4 links and which can realize the connections displayed in figure 1. The signals enter the network through ports and exit through amplifiers. In the following ports and amplifiers will be refered as inputs and outputs. They are respectively represented in figures by arrows ($\rightarrow$) and boxes ($\square$) as shown in figure 2. Each input and output are connected to one of the switches of the network.

The difficulties to design such networks come from two symmetric facts. On one hand the amplifiers may fail during satellite lifetime and cannot be repaired. So more amplifiers are needed than the number of signals which have to be routed. On the other hand as the satellite is rotating on itself, all the inputs are not well oriented to capt the incoming signals. So, at each moment, a lot of inputs are unused. We want to be able to route the incoming signals from the used inputs to valid amplifiers, that is to find disjoint paths between the used inputs and valid outputs in the interconnection network. All the amplifiers are identical so a signal can be routed to any of them. If a network is able to route p signals to amplifiers in presence of λ useless inputs and of k faulty amplifiers, we will say that this network is a valid (p,λ,k)-fault

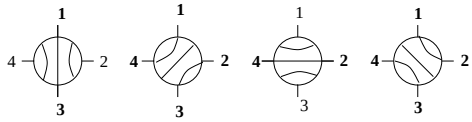

Fig. 1: A switch can use 4 different states.

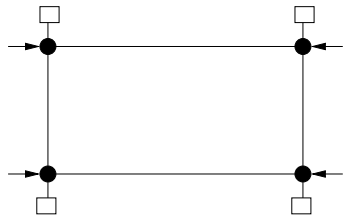

Fig. 2: A valid (3,1,1)-network.

tolerant network. An example of a $(3,1,1)$-fault tolerant network is given in figure 2. As a matter of fact all the possible configurations for the unused input and the non valid output, the three used inputs can be connected to the valid outputs. Other examples achieving this bounds are presented in Figure 3. Realizing such a network is easy, but it is difficult to optimise it. To decrease launch costs, it is crucial to minimise the network physical weight, i.e. for us, to minimize the number of switches. As launch costs are dramatically high, it is worth saving even one switch. So our aim will be to construst valid (p,λ,k)-networks with the minimum number of switches denoted by $\mathcal{N}(p,\lambda,k)$. On one side we consider asymptotic cases. The networks are large in the sense that p and k go to infinity. For symmetry reasons, we can assume $k \geq \lambda$. We give results for $k = O(\log p)$. On the other side we have also studied exact values for small k.

Related Work. The problem in which all the inputs are used, that is $\lambda = 0$, has been introduced in [BDD02]. In [BPT20] a general theory is introduced for $\lambda = 0$ and several results are obtained for small values of k. For example it is proven that $\mathcal{N}(p,0,4) = \frac{5p}{4} + 1$. In [BDH$^+$03] and [DHMP05] the case of switches with $2k > 4$ links is considered. In [BHT06] the authors consider a variant of (p,0,k)-networks where some signals are priorities and should be sent to amplifiers offering the best quality of service. Finally in [BD99] and [BD02] the authors study the case were all the amplifiers are different. (In this work we consider that all the amplifiers are identical so we won't have to care how the signals go through the switches (indeed if we are in a forbidden state we can exchange the exit of the signals, see [BDD02]).)

2 Formalization

2.1 The Problem

Notations. We introduce some notations we will use throughout this paper. Given a function f, we define $f(A) = \sum_{a \in A} f(a)$ for any finite set A. For a set $W \subset V$ of a graph $G = (V,E)$, let us denote $\Delta(W)$ the set of edges connecting W and $\bar{W} = V \backslash W$, $\delta(W)$ the cardinality of $\Delta(W)$, and $\Gamma(W)$ the set of vertices of W adjacent to a vertex of W.

Definition 1 ((p,λ,k)-network) *A (p,λ,k)-network is a triple $N = \{(V,E), i, o\}$ where $G = (V,E)$ is a graph and i, o are integral functions defined on V called input and output functions, such that for any $v \in V$, i(v) + o(v) + deg(v) = 4. The total number of inputs is $i(V) = \Sigma_{v \in V} i(v) = p + \lambda$, and the total number of outputs is $o(V) = \Sigma_{v \in V} o(v) = p + k$*

Definition 2 (non-faulty output function) *A non-faulty output function is a function o' defined on V such that $o'(v) \leq o(v)$ for any $v \in V$ and $o'(V) = p$.*

Definition 3 (used input function) *A used input function is a function i' defined on V such that $i'(v) \leq i(v)$ for any $v \in V$ and $i'(V) = p$.*

Definition 4 (valid (p,λ,k)-network) *A (p,λ,k)-network is valid if for any faulty output function o' and any used input function i', there are p edge-disjoint directed paths in G such that each vertex $v \in V$ is the initial vertex of i'(v) paths and the terminal vertex of o'(v) paths.*

Definition 5 ($\mathcal{N}(p,\lambda,k)$) *Let $\mathcal{N}(p,\lambda,k)$ denotes the minimum number of switches of a valid (p,λ,k)-network.*

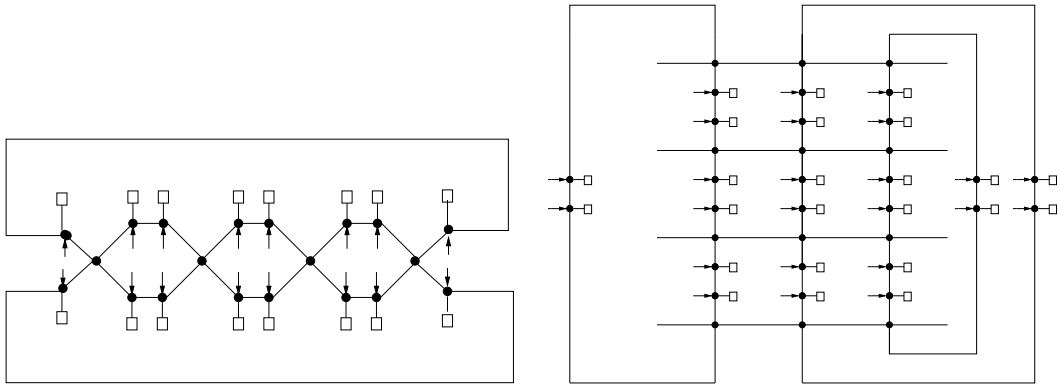

Fig. 3: A valid (16,4,4)-network and a valid (24,6,6)-network.

Problem 1 (Design Problem) *The design problem consists in determining $\mathcal{N}(p,\lambda,k)$ and in constructing a minimum (p,λ,k)-network, or at least a valid (p,λ,k)-network with a number of vertices close to the optimal value.*

Problem 2 (Simplified Design Problem) *To minimize the length of the signals between the inputs and the ouputs and to avoid the interferences between the signals of two differents inputs it is better that the practical networks do not have a vertex either with two inputs or two outputs on it and that the inputs and the outputs are in one-to-one correspondance on a vertex. To find minimun valid network like this is what we call the simplified design problem.*

2.2 Validity and Cut-criterion

In this subsection, we introduce a criterium that caracterize the validity of our (p,λ,k)-networks. It will be used for our proofs of validity and to find lower bounds.

Proposition 1 (cut criterion) *A (p,λ,k)-network is valid if and only if, for any subset of vertices $W \subset V$ the excess of W,*

$$\varepsilon(W) = \delta(W) + o(W) - \min(i(W), p) - \min(k, o(W))$$

satisfies $\varepsilon \geq 0$.

Proof. The intuition is $\min(o(W),k)$ is the maximum number of faults that can occur in W, so the cut-criterion simply states that the capacity of the border of W is larger than the difference $i(W) - o(W)$, plus the maximum number of faults in W. The omitted formal proof reduces to a supply/demand flow problem. □

3 Results

We obtain the results summarized in the following table and theorems. We present in Appendix proofs of the asymptotic bounds for the Simplified Design Problem defined in Section 2.1.

Cases ($k = O(\log p)$)	Tight?	Lower Bound	Upper Bound
$\lambda = 0$	**	$p+k+\frac{1}{2}(p+k)$	$p+k+\frac{1}{2}(p+k)$
Simplified Case	**	$2(p+k)$	$2(p+k)$
General Case $\lambda = \theta(k)$	*	$p+k+\frac{2}{3}(p+k)$	$p+k+\frac{3}{4}(p+k)$
General Case		$p+k+\frac{1}{2}(p+k)$	$p+k+\frac{3}{4}(p+k)$

Theorem 1 $\mathcal{N}(p,2,1) = \mathcal{N}(p,1,2) = \mathcal{N}(p,2,2) = p+2$

Theorem 2 *For λ or $k \in \{3,4\}$ and $\lambda, k \in [|0,4|]$*

$$\mathcal{N}(p,\lambda,k) = p + \max(\lambda,k) + \frac{p+\max(\lambda,k)}{4}$$

Theorem 3 *For λ or $k \in \{5,6\}$ and $\lambda, k \in [|0,6|]$*

$$\mathcal{N}(p,\lambda,k) \leq p + \max(\lambda,k) + \frac{p+\max(\lambda,k)}{2}$$

Examples of (p,4,4) and (p,6,6) networks are given in 3.

4 Conclusion

It remains a lot of work to do on this general problem for example on small values for specific demands of Alcatel but also we hope to find a tight asymptotic bound at least when $\lambda = O(1)$ and $k = O(\log p)$. We already have some results on networks without switches with two outputs or inputs as well as for networks with as many as possible (ie $p+\lambda$) switches with one input and one output and $k-\lambda$ switches with one output (extension of the simplified case). For values of λ and k of $O(\log p)$ it remains to tighten the bounds. It will be also interesting to study the case where $\lambda = \Theta(p)$ and $k = \Theta(p)$. We have yet only partial results.

References

[Bas81] L. A. Bassalygo. Asymptotically optimal switching circuits. *Problemy Pederachi Informatsii*, 17:81–88, 1981.

[BD99] B. Beauquier and E. Darrot. Arbitrary size Waksman networks. In *AlgoTel*, pages 95–100, 1999.

[BD02] B. Beauquier and E. Darrot. Arbitrary size Waksman networks and their vulnerability. *Parallel Processing Letters*, 3-4:287–296, 2002.

[BDD02] J-C. Bermond, E. Darrot, and O. Delmas. Design of fault tolerant on-boardnetworks in satellites. *Networks*, 40:202–207, 2002.

[BDH+03] J-C. Bermond, O. Delmas, F. Havet, M. Montassier, and S. Perennes. Réseaux de télécommunications minimaux embarqués tolérants aux pannes. In *Algotel*, pages 27–32, 2003.

[BHT06] J-C. Bermond, F. Havet, and D. Tóth. Fault tolerant on board networks with priorities. *Networks*, 47(1):9–25, 2006.

[BPT20] J.-C. Bermond, S. Perennes, and Cs. D. Tóth. Fault tolerant on-board networks with priorities. *Manuscrit*, 2020.

[Chu79] F. R. K. Chung. On concentrators, superconcentrators, generalizers and nonblocking networks. *Bell System Tech. J.*, 58:1765–1777, 1979.

[DHMP05] O. Delmas, F. Havet, M. Montassier, and S. Pérennes. Design of fault tolerant on-board networks. *Research report RR 1345-05, Laboratoire bordelais de recherche en informatique (LaBRI), Unité Mixte de Recherche CNRS (UMR 5800)*, 2005.

[Hav06] F. Havet. Repartitors, selectors and superselectors. *Submitted to Journal of Interconnection Networks*, 2006.

[Mor94] M. Morgenstern. Existence and explicit constructions of $q+1$ regular ramanujan graphs for every prime power q. *Journal of Combinatorial Theory Series B*, 62:44–62, 1994.

Appendix *(for the referees) :*

A Preliminary Definitions

Let $\mathcal{R}$ be a $(p,\lambda,k)-$network, let $n = p+k$.

Definition 6 (Doublons, R-Switches) *A* doublon *of $\mathcal{R}$ is a vertex with $i(v) = o(v) = 1$. An* R-switch *is a vertex that is not a doublon. Remark that the R-switches and doublons partition R.*

Definition 7 (Associated graph G of a network) *We build a graph G associated to $\mathcal{R}$. Its vertices are the R-switches of $\mathcal{R}$. Its edges are of three kinds, repectively E_0, E_1 and E_2: the edges of $\mathcal{R}$ between two R-switches, the edges corresponding in $\mathcal{R}$ to a path of length 2 with a doublon in the middle and those corresponding to a path of length 3 with 2 doublons in the middle. (The cut criterium gives immediately that edges of other kinds corresponding to paths of length more than 3 with doublons in the middle are forbidden).*

Definition 8 (q-quasi-partition see [DHMP05]) Let $G = (V,E)$ be a graph and q an integer. A *q-quasi-partition of G* is a set $\{A_1, A_2, \ldots, A_m\}$ of subsets of V, such that :

(i) for every $1 \leq i \leq m$, the subgraph induced by A_i, $G[A_i]$, is connected;

(ii) for every $1 \leq i \leq m$, $q/2 \leq |A_i| \leq q$;

(iii) $V = \bigcup_{i=1}^{m} A_i$ and $\sum_{i=1}^{m} |A_i| < |V| + |\{A_i, |A_i| > \frac{2q}{3}\}|$.

Lemma 1 *Let q be a real and G be a connected graph of order at least $q/2$. Then G admits a q-quasi-partition.*

Remark 1 *If G has several connected components of size at least q, applying the lemma for each component and using additivity of both sides of point 3 gives us a $q-$quasi-partition of G.*

A.1 Simplified Design Problem - Asymptotic Lower Bound

Theorem 4 *In a simplified network $\mathcal{R}$, when $k \to \infty$ with $k = O(\log n)$, we have*

$$\mathcal{N}(p,\lambda,k) \geq n + n\left(1 - \frac{7}{2}\frac{1}{\sqrt{k}} + O\left(\frac{1}{k}\right)\right)$$

Proof. The idea of the proof is to define large and small $H-$components of G the associated graph of $\mathcal{R}$. We then look at the large $H-$components and we show that the number of their $R-$switches, s, is bigger than n when k is big.

Definition 9 [$H-$component, large and small $H-$components, adjacent $H-$components] *We consider a $(p,\lambda,k)-$network and its associated graph G. We take H the subgraph of G containing only the edges E_0. An $H-$*component *of G is a connected component of H. An $H-$component is said* large *(respectively* small*) if it has more than or exactly (resp. less than) q switches, with q the greatest integer satisfying $2(q+(2q+2)q)+2 \leq k-1$. Remark that $q \sim \frac{\sqrt{k}}{2}$. Two $H-$components C_1 and C_2 are said* adjacent *if there exists an edge of G with one $R-$switch in C_1 and the other in C_2.*

Proposition 2

1. *A small $H-$component has no outgoing edges of kind E_2.*
2. *Two small $H-$components are not adjacent.*

Proof. Let C be a small $H-$component. As $k \leq p$ and $|C| \leq q \approx \sqrt{k}$, $i(C) = o(C) << k \leq p$. The cut criterium becomes

$$\delta(C) \geq i(C)$$

Let e_1 (res. e_2) be the number of edges of kind E_1 (resp. E_2) in C.

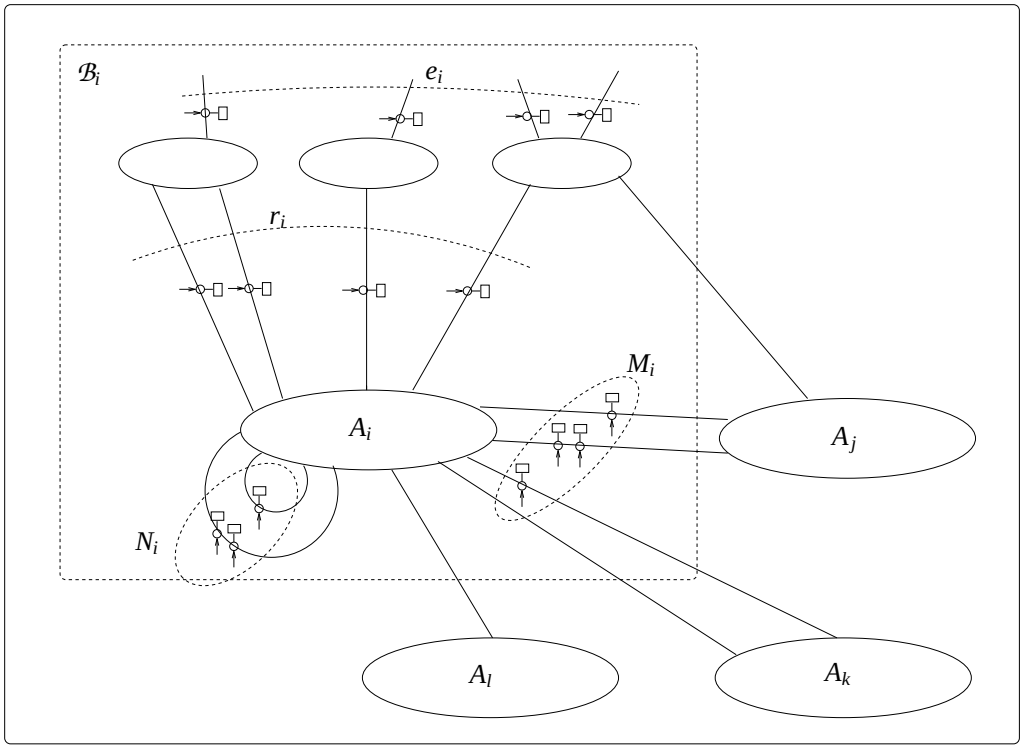

1. By definition of a small component $\delta(C) \leq e_1 + e_2$. We have $i(C) = o(C) = e_1 + 2e_2$. So $e_2 = 0$.
2. Let C' be an other small $H-$component. If C and C' are joined. Then let $W = C \cap C'$. $i(W) = e_1 + e'_1 - 1$. $\delta(W) \leq e_1 + e'_1$. Contradiction.

□

According to Lemma 1 and Remark 1, the union of the large $H-$components of G admits a $q-$quasi-partition $\mathcal{F} = \{A_1, \ldots, A_m\}$. So each A_i is connected and of size $\frac{q}{2} \leq |A_i| \leq q$.

Between all edges with doublons we distinguish: the edges of type R between an A_i and a small $H-$component, the ones of type M between two large $H-$components and the ones of type N inside a large $H-$component.

We introduce the set $\mathcal{B}_i$ consisting of A_i union all the small $H-$components adjacent to it.

Let r_i, e_i, M_i, N_i be the numbers of edges between A_i and small H-components, outgoing edges of small components, doublons on the edges of type M and doublons on the edges of type N. Remark that the r_i and e_i edges are of type R as two small components can not be adjacent.

Let us now apply the cut criterium to $\mathcal{B}_i$.

$$\delta(\mathcal{B}_i) + o(\mathcal{B}_i) - \min(k, o(\mathcal{B}_i)) - \min(i(\mathcal{B}_i), p) \geq 0$$

As $\delta(\mathcal{B}_i)$, $o(\mathcal{B}_i)$ and $i(A)$ are of order k, and k is of order $\log p$ in the asymptotic case, $i(\mathcal{B}_i) << p$.

If $o(\mathcal{B}_i) \geq k$, the cut criterium reduces to $\delta(\mathcal{B}_i) \geq k$. Let us look now at $\delta(\mathcal{B}_i)$. A_i is connected and of size less than q. So it has at most $2q+2$ outgoing edges and the number of small $H-$components of $\mathcal{B}_i$ is at most $2q+2$. As the size of a small $H-$component is less than q, the number of vertices in $\mathcal{B}_i$ is at most $q + (2q+2)q$. Hence the number of outgoing edges $\delta(\mathcal{B}_i)$ is at most $2(q + (2q+2)q) + 2$. It gives

$$k \leq \delta(\mathcal{B}_i) \leq k - 1$$

a contradiction.

So $o(\mathcal{B}_i) < k$. The cut criterium becomes $\delta(\mathcal{B}_i) \geq i(\mathcal{B}_i)$. But $\delta(\mathcal{B}_i) \leq 2|A_i| + 2 + e_i - r_i - 2N_i$ and $i(\mathcal{B}_i) = e_i + r_i + M_i + N_i$. Hence

$$|A_i| + 1 \geq r_i + \frac{M_i}{2} + 3N_i$$

The number of doublons is n. All doublons are of type R, M or N. The doublons in M are counted for two different A_i and A_j. So

$$\sum_{i=1}^{m} r_i + \frac{M_i}{2} + N_i \geq n$$

Hence

$$\sum_{i=1}^{m} A_i + m \geq n. \tag{1}$$

As the A_i form a q-quasi-partition of the large H-components and $|V(G)| = s$ the number of $R-$switches,

$$\sum_{i=1}^{m} A_i \geq s + |\{A_i, |A_i| > \frac{2q}{3}\}|.$$

We note $t := |\{A_i, |A_i| > \frac{2q}{3}\}|$. As $|A_i| \geq \frac{q}{2}$, $m \leq \frac{s+t}{\frac{q}{2}}$. Hence equation 1 gives

$$(s+t) + \frac{2(s+t)}{q} \geq n \Rightarrow s+t \geq \frac{q}{q+2} n$$

By definition $t \leq \frac{s+t}{\frac{2q}{3}}$, so $t < \frac{s}{\frac{2q}{3}-1}$. And we have

$$s\left(1 + \frac{1}{\frac{2q}{3}-1}\right) \geq \frac{q}{q+2} n$$

$$s \geq n \frac{q}{q+2} \frac{2q-3}{2q} = n\left(1 - \frac{7}{2q+4}\right)$$

When $k \to \infty$

$$s \geq n\left(1 - \frac{7}{2\sqrt{k}} + O\left(\frac{1}{k}\right)\right).$$

We just have to add the n doublons of $\mathcal{R}$ to have the result.

□

B Simplified Design Problem - Asymptotic Upper Bound

In this section we give a construction of a valid $(n-k,k,k)$-network for large n and k of order $\log n$ with $2n$ switches. It gives us the upper bound of Theorem 5. We use 4-regular expanders to do this.

Definition 10 *(E-Expander) An (n,r,c)-E-expander is a finite r-regular graph $G = (V,E)$ which satisfies the following expansion property : for any set A of vertices of G with $|A| \leq |V|/2$ we have $\delta(A, V \setminus A) \geq c|A|$ where $\delta(A, V \setminus A)$ denotes the number of edges between A and $X \setminus A$.*

Theorem 5 *In a network $\mathcal{R}$, when $k \to \infty$ with $k = O(\log n)$, we have*

$$\mathcal{N}(p, \lambda, k) \leq 2n$$

Proof. Let G an $(n,4,c)$-E-expander of girth $\Theta(\log n)$ and $k \leq cg(G)$ (for explicit construction see [Mor94]). Take a family F of disjoint cycles covering all the vertices and add n new vertices by splitting each edge of this family into two edges. Each of these vertices have an output and $n-k+\lambda$ of them also have an input. To prove that this network is valid it is sufficient to verify:
"For every set of k-new vertices with an input and any set of k new vertices with an output we can find k edge-disjoint paths joining them."
Let A be a set of vertices of G. We show there are at least $min(k, |\Gamma_F(A)|)$ different edges between A and

$V \setminus A$ where $\Gamma_F(A)$ are edges of F with an extremity in A. This will prove the above statement.
By symmetry we can suppose $|A| \leq \frac{|V|}{2}$. If $|A| \geq \frac{k}{c}$ then by the expansion property there are at least k edges between A and $V \setminus A$. Now if $|A| \leq \frac{k}{c} \leq g(G)$ then $G_i[A]$ is acyclic. We have $\delta(A, V \setminus A) \geq 2|A| + 2$ because G_i is 4-regular and there are at most $|A| - 1$ edges inside A. Furthermore $|\Gamma_F(A)| \leq 2|A|$ so $\delta(A, V \setminus A) \geq min(k, |\Gamma_F(A)|)$

$\square$