HAL
open science

# Global stabilization of the PVTOL aircraft with lateral force coupling and bounded inputs

Daniela Juanita López-Araujo, Arturo Zavala-Río, Isabelle Fantoni, Sergio Salazar, Rogelio Lozano

## To cite this version:

Daniela Juanita López-Araujo, Arturo Zavala-Río, Isabelle Fantoni, Sergio Salazar, Rogelio Lozano. Global stabilization of the PVTOL aircraft with lateral force coupling and bounded inputs. International Journal of Control, 2010, 83 (7), pp.1427-1441. 10.1080/00207171003758778 . hal-00503221

**HAL Id: hal-00503221**

**https://hal.science/hal-00503221v1**

Submitted on 17 Jul 2010

**HAL** is a multi-disciplinary open access archive for the deposit and dissemination of scientific research documents, whether they are published or not. The documents may come from teaching and research institutions in France or abroad, or from public or private research centers.

L'archive ouverte pluridisciplinaire **HAL**, est destinée au dépôt et à la diffusion de documents scientifiques de niveau recherche, publiés ou non, émanant des établissements d'enseignement et de recherche français ou étrangers, des laboratoires publics ou privés.

*International Journal of Control*
Vol. 00, No. 00, Month 200x, 1–26

**Research Article**

# Global stabilization of the PVTOL aircraft with lateral force coupling and bounded inputs

D.J. López-Araujo[a], A. Zavala-Río[a*], I. Fantoni[b], S. Salazar[b], and R. Lozano[b]

[a] *IPICYT, Camino a la Presa San José 2055, Lomas 4a. Sección 78216, San Luis Potosí, Mexico*
[b] *Heudiasyc (UMR-CNRS 6599), UTC, BP 20529, 60205 Compiègne, France*

(*Received March 2009*)

This work is devoted to prove that the nonlinear control scheme previously proposed by the (2nd, 3rd, & 5th) authors for the global stabilization of the PVTOL aircraft with bounded inputs neglecting the lateral force coupling, is robust with respect to the parameter characterizing such a lateral force coupling, $\varepsilon$, as long as such a parameter takes small enough values. In other words, global stabilization is achieved even if $\varepsilon > 0$, provided that such a parameter be sufficiently small. As far as the authors are aware, such a property has not been proved in other existing control schemes when the value of $\varepsilon$ is not known. The presented methodology is based on the use of embedded saturation functions. Furthermore, experimental results of the control algorithm implemented on a real prototype are presented.

**Keywords:** PVTOL aircraft; global stabilization; bounded inputs; saturations; nonlinear control; robustness

## 1 Introduction

The literature shows that the planar vertical take-off and landing (PVTOL) aircraft continuously produces a great interest in the control community. Indeed, its mathematical model represents a challenge in nonlinear control design. The PVTOL aircraft system is also extensively used to develop and/or approximate models of flying vehicles. This can be confirmed through numerous works that have been recently contributed on Unmanned Autonomous Vehicles (UAV).

The nonlinear dynamical model of the PVTOL aircraft, as presented in Hauser *et al.* (1992), is given by the following equations (see Fig. 1)

$$\ddot{x} = -u_1 \sin\theta + \varepsilon u_2 \cos\theta \tag{1a}$$

$$\ddot{y} = u_1 \cos\theta + \varepsilon u_2 \sin\theta - 1 \tag{1b}$$

$$\ddot{\theta} = u_2 \tag{1c}$$

where $x$, $y$, and $\theta$ respectively refer to the center of mass horizontal and vertical positions and the roll angle of the aircraft with the horizon; as conventionally, a dot and a double dot above respectively denote velocity and acceleration. The variables $u_1$ and $u_2$ are respectively the thrust and the angular acceleration inputs. The constant '$-1$' is the normalized gravitational acceleration and $\varepsilon$ is a (generally small) coefficient which characterizes the coupling between the rolling moment $u_2$ and the lateral acceleration of the aircraft.

A large number of authors have proposed control methodologies for the stabilization or the trajectory tracking of the PVTOL aircraft system. To cite a few of them, such studies include

*Corresponding author. Email: azavala@ipicyt.edu.mx

ISSN: 0020-7179 print/ISSN 1366-5820 online
© 200x Taylor & Francis
DOI: 10.1080/0020717YYxxxxxxxx
http://www.informaworld.com

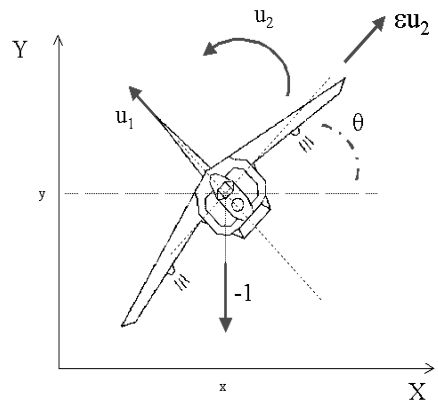


Figure 1. The PVTOL aircraft

Hauser *et al.* (1992), Lin *et al.* (1999), Marconi *et al.* (2002), Martin *et al.* (1996), Olfati-Saber (2002), Saeki and Sakaue (2001), Sepulchre *et al.* (1997), Setlur *et al.* (2001), Teel (1996), Zavala-Río *et al.* (2003). Some authors have also contributed works supporting their algorithms through experimental PVTOL aircraft setups (see for instance Lozano *et al.* (2004), Palomino *et al.* (2003)). Some others have also been interested in designing observers when the full state of the PVTOL system is not completely measurable. Indeed, Do *et al.* (2003) proposed an output-feedback tracking controller considering no velocity measurements in the system and Sanchez *et al.* (2004) presented a nonlinear observer design for the PVTOL aircraft in order to estimate the angular position of the system.

Recently, Wood and Cazzolato (2007) proposed a nonlinear control scheme using a feedback law that casts the system into a cascade structure and proved its global stability. Global stabilization was also achieved by Ye *et al.* (2007) through a saturated control technique by previously transforming the PVTOL dynamics into a chain of integrators with nonlinear perturbations. Further, a nonlinear prediction-based control approach was proposed by Chemori and Marchand (2008) for the stabilization problem; the control method is based on partial feedback linearization and optimal trajectories generation to enhance the behaviour and the stability of the systems internal dynamics. Tracking and path following controllers have also been developed. Indeed, on the one hand, an open-loop exact tracking for the VTOL aircraft with bounded internal dynamics via a Poincaré map approach was presented in Consolini and Tosques (2007). On the other hand, a path following controller was proposed in Nielsen *et al.* (2008) that drives the center of mass of the PVTOL aircraft to the unit circle and makes it traverse the circle in a desired direction; instead of using time parametrization of the path, they use a nested set stabilization approach.

In the previously cited works, either the lateral coupling was neglected (by regarding the coupling constant $\varepsilon$ as so small that $\varepsilon = 0$ is supposed in (1); see for instance (Hauser *et al.* 1992, §2.4)), or the exact knowledge of this term was considered to design the controllers. On the other hand, from all the previously cited works, Zavala-Río *et al.* (2003) was the first to simultaneously consider the bounded nature of both inputs and the positive character of the thrust to develop a globally stabilizing scheme. Nevertheless, robustness of the previously proposed algorithms to uncertainties on the coupling parameter $\varepsilon$ has hardly been addressed. The optimal control setting of Lin *et al.* (1999) was designed under the consideration of such uncertainties, but a nominal value of $\varepsilon$ is required by the proposed algorithm. Further, Teel (1996) proposed a control law based on the exact value of $\varepsilon$ and showed robustness of his approach, but only through numerical simulations and for initial conditions being close enough to the origin. Numerical simulations were also used in Chemori and Marchand (2008) to evaluate and show robustness of their algorithm towards uncertain values of $\varepsilon$. Now, due to its dependence on the physical parameters of the aircraft, the supposition that $\varepsilon$ is exactly known could be defended (see, for instance, Olfati-Saber (2002)). Nevertheless, its exact value can be difficult to measure or estimate in real experiments.

In the present paper, the crucial contribution consists in demonstrating that through the use

of the control methodology previously presented in Zavala-Río *et al.* (2003), where $\varepsilon = 0$ was supposed, global stabilization is achieved even if $\varepsilon > 0$, provided that such a parameter takes small enough values. This corroborates the robustness of such a control approach. The algorithm is based on the use of the embedded saturation function methodology proposed by Teel (1992). The strength of the presented analysis relies on the fact that no modification on the original control algorithm was required. Furthermore, the applicability of the method has been validated by experimental results. Indeed, we present in this paper an experiment where we have applied the proposed control design methodology on a four-rotor helicopter.

The paper is organized as follows. Section 2 states the notation used throughout the paper. Section 3 recalls the approach presented in Zavala-Río *et al.* (2003). Section 4 details the stability analysis of the closed-loop system including the lateral force coupling. Some experimental results are presented in Section 5. Finally, conclusions are given in Section 6.

## 2 Notation

Let $I\!R_+$ represent the set of nonnegative real numbers. We denote $0_n$ the origin of $I\!R^n$. For any $x \in I\!R^n$, $x_i$ represents its $i^{th}$ element. Let $A \in I\!R^{n\times n}$ be a symmetric matrix, *i.e.* $A^T = A$. The maximum and minimum eigenvalues of $A$ will be respectively denoted $\lambda_{\max}(A)$ and $\lambda_{\min}(A)$. $I_n$ denotes the $n \times n$ identity matrix.

Throughout the paper, $\|\cdot\|$ will represent the standard Euclidean vector norm and induced matrix norm, *i.e.* $\|x\| \triangleq \left[\sum_{i=1}^n |x_i|^2\right]^{1/2}$ for any $x \in I\!R^n$, and $\|B\| = \left[\lambda_{\max}(B^TB)\right]^{1/2}$ for any $B \in I\!R^{m\times n}$. Other type of norms will be explicitly expressed. For instance, the infinite induced matrix norm will be denoted $\|B\|_\infty$, *i.e.* $\|B\|_\infty \triangleq \max_i \sum_{j=1}^n |b_{ij}|$, where $b_{ij}$ represents the element in row $i$ and column $j$ of matrix $B$.

Let $\mathcal{A}$ and $\mathcal{E}$ be subsets (with nonempty interior) of some vector spaces $\mathbb{A}$ and $\mathbb{E}$ respectively. We denote $\mathcal{C}_L^m(\mathcal{A};\mathcal{E})$ the set of $m$-times continuously differentiable functions from $\mathcal{A}$ to $\mathcal{E}$ whose $m^{\text{th}}$ derivative is Lipschitz-continuous. Consider a scalar function $h \in \mathcal{C}_L^2(I\!R; I\!R)$. The following notation will be used: $h' : s \to \frac{d}{ds}h$ and $h'' : s \to \frac{d^2}{ds^2}h$, while $h''' : s \to D^+h''$, where $D^+$ denotes the upper right-hand (Dini) derivative (see for instance (Khalil 2002, Appendix C2)). Let us note that if a scalar function $v(s)$ is differentiable at $s$, then $D^+v(s) = \frac{dv}{ds}(s)$. For a Lipschitz-continuous function $v(s)$ that is not differentiable at a finite number of values of $s$, say $s_1, s_2, ..., s_n$, $D^+v(s)$ is a function with bounded discontinuities but well defined at such points, $s_1, s_2, ..., s_n$.

## 3 Globally stabilizing controller

In view of the small value that $\varepsilon$ usually takes (see, for instance, Hauser *et al.* (1992)), a control scheme for the PVTOL aircraft was proposed in Zavala-Río *et al.* (2003) by considering $\varepsilon = 0$ in (1), *i.e.* modelling the system dynamics as

$$\ddot{x} = -u_1 \sin\theta \quad , \quad \ddot{y} = u_1 \cos\theta - 1 \quad , \quad \ddot{\theta} = u_2 \tag{2}$$

Under this consideration, the **control objective** achieved in Zavala-Río *et al.* (2003) was the global asymptotic stability of the closed-loop system trivial solution $(x, y, \theta)(t) \equiv (0, 0, 0)$ avoiding input saturation, *i.e.* with $0 \le u_1(t) \le U_1$ and $|u_2(t)| \le U_2$, $\forall t \ge 0$, for some constants $U_1 > 1$ and $U_2 > 0$.[1]

[1]Notice, from the vertical motion equation in the system dynamic model, whether the lateral force coupling is neglected as in (2) or considered as in (1), that $U_1 > 1$ is a necessary condition for the PVTOL to be stabilizable at any desired position. Indeed, any steady-state condition implies that the aircraft weight be compensated.

The approach developed in Zavala-Río *et al.* (2003) is based on the use of *linear saturation functions*, as defined in Teel (1992), and a special type of them stated in Zavala-Río *et al.* (2003) and referred to as *two-level linear saturation functions*, whose definitions are recalled here.

**Definition 3.1:** Given positive constants $L$ and $M$, with $L \leq M$, a function $\sigma : I\!R \to I\!R$ is said to be a ***linear saturation*** for $(L, M)$ if it is a nondecreasing Lipschitz-continuous function satisfying

(a) $\sigma(s) = s$ when $|s| \leq L$
(b) $|\sigma(s)| \leq M$ for all $s \in I\!R$

**Definition 3.2:** Given positive constants $L^+$, $M^+$, $N^+$, $L^-$, $M^-$, and $N^-$, with $L^\pm \leq \min\{M^\pm, N^\pm\}$, a function $\sigma : I\!R \to I\!R$ is said to be a ***two-level linear saturation*** for $(L^+, M^+, N^+, L^-, M^-, N^-)$ if it is a nondecreasing Lipschitz-continuous function satisfying

(a) $\sigma(s) = s$ for all $s \in [-L^-, L^+]$
(b) $-M^- < \sigma(s) < M^+$ for all $s \in (-N^-, N^+)$
(c) $\sigma(s) = -M^-$ for all $s \leq -N^-$
(d) $\sigma(s) = M^+$ for all $s \geq N^+$

We recall the control scheme proposed in Zavala-Río *et al.* (2003), where the thrust $u_1$ and the rolling moment $u_2$ were defined as

$$u_1 = \sqrt{r_1^2 + (1 + r_2)^2} \tag{3}$$

$$u_2 = \sigma_{41}(\alpha_d) - \sigma_{32}\big(\dot\theta - \sigma_{42}(\omega_d) + \sigma_{31}(\dot\theta - \sigma_{43}(\omega_d) + \theta - \theta_d)\big) \tag{4}$$

where

$$r_1 = -k\sigma_{12}(\dot x + \sigma_{11}(kx + \dot x)) \tag{5}$$

$$r_2 = -\sigma_{22}(\dot y + \sigma_{21}(y + \dot y)) \tag{6}$$

$$\theta_d = \arctan(-r_1, 1 + r_2) \tag{7}$$

$\arctan(a, b)$ represents the (unique) angle $\alpha$ such that $\sin\alpha = a/\sqrt{a^2 + b^2}$ and $\cos\alpha = b/\sqrt{a^2 + b^2}$; $k$ in (5) is a positive constant smaller than unity, *i.e.*

$$0 < k < 1 \tag{8a}$$

$\sigma_{ij}(\cdot)$ in (5) and (6) are functions on $\mathcal{C}^2_L(I\!R; I\!R)$ satisfying Definition 3.2, for given ($L^+_{ij}$, $M^+_{ij}$, $N^+_{ij}$, $L^-_{ij}$, $M^-_{ij}$, $N^-_{ij}$) such that

$$(kM_{12})^2 + \big(1 + M^-_{22}\big)^2 < U_1^2 \tag{8b}$$

$$M^+_{22} < 1 \tag{8c}$$

$$M_{i1} < \frac{L_{i2}}{2}, \quad \forall i = 1, 2 \tag{8d}$$

with $M_{ij} \triangleq \max\{M^-_{ij}, M^+_{ij}\}$ and $L_{ij} \triangleq \min\{L^-_{ij}, L^+_{ij}\}$, $i = 1, 2$, $j = 1, 2$; the functions $\sigma_{mn}(\cdot)$ in (4) are linear saturations for given $(L_{mn}, M_{mn})$ such that

$$M_{41} + M_{32} < U_2 \tag{9a}$$

$$M_{41} + 2M_{42} + 2M_{31} < L_{32} \tag{9b}$$

$$M_{41} + M_{42} + 2M_{43} + 2B_{\theta_d} < L_{31} \tag{9c}$$

with

$$B_{\theta_d} \triangleq \arctan\left(kM_{12}, 1 - M_{22}^{+}\right) \tag{10}$$

and

$$\omega_d \triangleq \left.\frac{d\theta_d}{dt}\right|_{\varepsilon=0} \qquad \text{and} \qquad \alpha_d \triangleq \left.\frac{d^2\theta_d}{dt^2}\right|_{\varepsilon=0}$$

whose expressions, calculated considering equations (2) as the system dynamics, are given by

$$\omega_d = k\bar{\omega}_d \tag{11a}$$

with

$$\bar{\omega}_d = \frac{\bar{r}_1\rho_2 - (1 + r_2)\rho_1}{u_1^2} \tag{11b}$$

and

$$\alpha_d = k\bar{\alpha}_d \tag{12a}$$

with

$$\bar{\alpha}_d = \frac{\bar{r}_1\varphi_2 - (1 + r_2)\varphi_1}{u_1^2} - \frac{2\mu_1\bar{\omega}_d}{u_1} \tag{12b}$$

where

$$\bar{r}_1 \triangleq \frac{r_1}{k} = -\sigma_{12}(s_{12}) \tag{13a}$$

$$\rho_1 \triangleq \left.\frac{d\bar{r}_1}{dt}\right|_{\varepsilon=0} = -\sigma'_{12}(s_{12})[-u_1\sin\theta + \sigma'_{11}(s_{11})(k\dot{x} - u_1\sin\theta)] \tag{13b}$$

$$\rho_2 \triangleq \left.\frac{dr_2}{dt}\right|_{\varepsilon=0} = -\sigma'_{22}(s_{22})[u_1\cos\theta - 1 + \sigma'_{21}(s_{21})(\dot{y} + u_1\cos\theta - 1)] \tag{13c}$$

$$\begin{aligned}\varphi_1 \triangleq \left.\frac{d^2\bar{r}_1}{dt^2}\right|_{\varepsilon=0} = &- \sigma''_{12}(s_{12})[-u_1\sin\theta + \sigma'_{11}(s_{11})(k\dot{x} - u_1\sin\theta)]^2 \\ &- \sigma'_{12}(s_{12})\big[-u_1\dot{\theta}\cos\theta - \mu_1\sin\theta + \sigma''_{11}(s_{11})(k\dot{x} - u_1\sin\theta)^2 \\ &+ \sigma'_{11}(s_{11})(-ku_1\sin\theta - u_1\dot{\theta}\cos\theta - \mu_1\sin\theta)\big]\end{aligned} \tag{13d}$$

$$\begin{aligned}\varphi_2 \triangleq \left.\frac{d^2 r_2}{dt^2}\right|_{\varepsilon=0} = &-\sigma''_{22}(s_{22})[u_1\cos\theta - 1 + \sigma'_{21}(s_{21})(\dot{y} + u_1\cos\theta - 1)]^2 \\ &- \sigma'_{22}(s_{22})\big[-u_1\dot{\theta}\sin\theta + \mu_1\cos\theta + \sigma''_{21}(s_{21})(\dot{y} + u_1\cos\theta - 1)^2 \\ &+ \sigma'_{21}(s_{21})(u_1\cos\theta - 1 - u_1\dot{\theta}\sin\theta + \mu_1\cos\theta)\big]\end{aligned} \tag{13e}$$

$$\mu_1 \triangleq \left.\frac{du_1}{dt}\right|_{\varepsilon=0} = \frac{k^2\bar{r}_1\rho_1 + (1+r_2)\rho_2}{u_1} \tag{13f}$$

with

$$\begin{aligned} s_{11} &\triangleq kx + \dot{x}\ ,\ s_{12} \triangleq \dot{x} + \sigma_{11}(s_{11}) \\ s_{21} &\triangleq y + \dot{y}\ \ ,\ s_{22} \triangleq \dot{y} + \sigma_{21}(s_{21}) \end{aligned} \tag{13g}$$

**Remark 1:** One can easily verify, from the above stated equations, that if $x = y = \theta = \dot{x} = \dot{y} = \dot{\theta} = 0$, then $r_1 = r_2 = \theta_d = 0$, $u_1 = 1$, $\omega_d = \alpha_d = u_2 = 0$, and consequently, from the system dynamics in Eqs. (1), we have that $\ddot{x} = \ddot{y} = \ddot{\theta} = 0$.

## 4 Main Result

**Proposition 4.1:** *Consider the PVTOL aircraft dynamics (1) with input saturation bounds $U_1 > 1$ and $U_2 > 0$. Let the input thrust $u_1$ be defined as in (3),(5),(6), with constant $k$ and parameters ($L^+_{ij}$, $M^+_{ij}$, $N^+_{ij}$, $L^-_{ij}$, $M^-_{ij}$, $N^-_{ij}$) of the twice differentiable two-level linear saturation functions $\sigma_{ij}(\cdot)$ in (5) and (6) satisfying inequalities (8), and the input rolling moment $u_2$ as in (4),(7),(11),(12), with parameters $(L_{mn}, M_{mn})$ of the linear saturation functions $\sigma_{mn}(\cdot)$ in (4) satisfying inequalities (9). Then, provided that $k$ and $\varepsilon$ are sufficiently small,*

*(i) global asymptotic stability of the closed-loop system trivial solution $(x, y, \theta)(t) \equiv (0, 0, 0)$ is achieved, with*

*(ii) $0 < 1 - M^+_{22} \leq u_1(t) \leq \sqrt{(kM_{12})^2 + \left(1 + M^-_{22}\right)^2} < U_1$ and $|u_2(t)| \leq M_{41} + M_{32} < U_2$, $\forall t \geq 0$.*

*Proof* Item (ii) of the statement results from the definition of $u_1$, $u_2$, $r_1$, and $r_2$. Its proof is consequently straightforward. We focus on the proof of item (i). Let us consider the state vector

$$z = \begin{pmatrix} z_1 & z_2 & z_3 & z_4 & z_5 & z_6 \end{pmatrix}^T \triangleq \begin{pmatrix} x & \dot{x} & y & \dot{y} & \theta & \dot{\theta} \end{pmatrix}^T \tag{14}$$

evolving within the normed state space $(\mathbb{R}^6, \|\cdot\|)$. The closed-loop system dynamics gets a consequent state-space representation $\dot{z} = f(z)$, with $f(0_6) = 0_6$ (see Remark **1**). The present stability analysis is carried out showing that under such a state space representation, provided that $\varepsilon$ and $k$ are small enough, the origin is asymptotically stable and globally attractive (Rouche *et al.* 1977, §2.11), or equivalently for the latter property, with $\mathbb{R}^6$ as region of attraction (Rouche *et al.* 1977, §2.10), (Hahn 1967, §26), (Sepulchre *et al.* 1997, §2.3.1), that is, with every solution converging to the origin whatever its initial condition is in $\mathbb{R}^6$ (Khalil 2002, §4.1), (Sastry 1999, Definition 5.8).

The asymptotic stability of the origin is proved through the linearization (or indirect Lyapunov) method (see for instance (Khalil 2002, Theorem 4.7)), considering that, provided that $k$ is small enough, within a sufficiently small neighborhood around the origin, we have that the values of all the saturation functions in equations (4)–(6) are equal to their respective arguments (this is analytically corroborated in (Zavala-Río *et al.* 2003, Appendix B) and (López-Araujo

2008, Appendix A)), *i.e.*

$$r_1 = -2kz_2 - k^2 z_1 \quad , \quad r_2 = -2z_4 - z_3 \quad , \quad u_2 = \alpha_d - 2(z_6 - \omega_d) - (z_5 - \theta_d)$$

Under this consideration, the Jacobian matrix of $f(z)$ evaluated at the origin, $A \triangleq \frac{\partial f}{\partial z}\Big|_{z=0_6}$, is given by

$$A = \begin{pmatrix} 0 & 1 & 0 & 0 & 0 & 0 \\ \varepsilon k^2 & 2\varepsilon k(k+1) & 0 & 0 & -1-\varepsilon[k(k+4)+1] & -2\varepsilon(k+1) \\ 0 & 0 & 0 & 1 & 0 & 0 \\ 0 & 0 & -1 & -2 & 0 & 0 \\ 0 & 0 & 0 & 0 & 0 & 1 \\ k^2 & 2k(k+1) & 0 & 0 & -k(k+4)-1 & -2(k+1) \end{pmatrix}$$

Further, its characteristic polynomial, $P(\lambda) \triangleq |\lambda I - A|$, is given by

$$P(\lambda) = (\lambda+1)^2 \left[\lambda^4 + 2(k+1)(1-\varepsilon k)\lambda^3 + (k^2+4k+1-\varepsilon k^2)\lambda^2 + 2k(k+1)\lambda + k^2\right]$$

Applying the Routh-Hurwitz criterion, one can verify that if $\varepsilon k < 0.8$, all the roots of $P(\lambda)$ have negative real parts (this is shown in (López-Araujo 2008, Appendix B)) and, consequently, the origin of the closed-loop system is indeed asymptotically stable.

The proof of the global attractivity of the origin is divided in 6 parts. The first part shows that $\theta_d$, $\omega_d$, and $\alpha_d$, respectively in (7), (11), and (12), are bounded signals whose bounds are directly influenced by the parameter $k$. The second part shows that for any initial condition vector $z(0) \in I\!R^6$, provided that $k$ is small enough, there exists a finite time $t_2 \geq 0$ after which the trajectories of the rotational motion dynamics evolve within a positively invariant set $\mathcal{S}_0 \subset I\!R^2$ where the value of every linear saturation function $\sigma_{mn}(\cdot)$ in (4) is equal to that of its argument. By defining $\dot{\theta}_d = \frac{d\theta_d}{dt}\Big|_{\varepsilon\geq 0}$ and the error variable vector $e = (e_1 \quad e_2)^T \triangleq (z_5 - \theta_d \quad z_6 - \dot{\theta}_d)^T$, the third part shows that, for any $z(t_2) \in I\!R^4 \times \mathcal{S}_0$, there exists a finite time $t_3 \geq t_2$ such that $\|e(t)\| \leq \varepsilon k B_{\bar{e}}$, $\forall t \geq t_3$, for some $B_{\bar{e}} > 0$, or equivalently $e(t) \in \mathcal{B}_1 \triangleq \{e \in I\!R^2 : \|e\| \leq \varepsilon k B_{\bar{e}}\}$, $\forall t \geq t_3$. By defining $z_T \triangleq (z_1 \quad z_2 \quad z_3 \quad z_4)^T$ and $\zeta = (z_T^T \quad e^T)^T$, the fourth part shows that for any $\zeta(t_3) \in I\!R^4 \times \mathcal{B}_1$, provided that $\varepsilon k$ is small enough, there exists a finite time $t' \geq t_3$ after which the trajectories of the translational motion closed-loop dynamics, $z_T(t)$, evolve within a positively invariant set $\mathcal{S}_{12} \subset I\!R^4$ where the value of every linear saturation function $\sigma_{ij}(\cdot)$ in (5) and (6) is equal to that of its argument. The fifth part shows that, for any $\zeta(t') \in \mathcal{S}_{12} \times \mathcal{B}_1$, there exists a finite time $t_8 \geq t'$ such that $\|\zeta(t)\| \leq \varepsilon k B_{\bar{\zeta}}$, $\forall t \geq t_8$, for some $B_{\bar{\zeta}} > 0$, or equivalently $\zeta(t) \in \mathcal{B}_2 \triangleq \{\zeta \in I\!R^6 : \|\zeta\| \leq \varepsilon k B_{\bar{\zeta}}\}$, $\forall t \geq t_8$. The sixth part proves that for any $\zeta(t_8) \in \mathcal{B}_2$, provided that $\varepsilon$ is small enough, $\zeta(t) \to 0_6$ as $t \to \infty$. Since $\zeta = 0_6 \iff z = 0_6$, and in view of the intermediate results obtained in the precedent parts, global attractivity of the origin of the closed-loop system is concluded.

*First part.* From the strictly increasing nature of the *arctan* function and the definitions of $r_1$ and $r_2$ in (5) and (6), it can be seen that $|\theta_d(t)| \leq B_{\theta_d}$ (see (10)), $\forall t \geq 0$. Furthermore, note that $\frac{\partial B_{\theta_d}}{\partial k} = \frac{M_{12}(1-M_{22}^+)}{(kM_{12})^2+(1-M_{22}^+)^2} \leq \frac{M_{12}}{1-M_{22}^+}$, $\forall k > 0$, whence we have $B_{\theta_d} \leq \frac{M_{12}}{1-M_{22}^+} \cdot k$, $\forall k > 0$, which shows that $B_{\theta_d}$ is directly influenced by $k$. Now, twice differentiability of $\sigma_{ij}(s)$ $(i = 1,2; j = 1,2)$ on $I\!R$ guarantees boundedness of $\sigma'_{ij}(s)$ and $\sigma''_{ij}(s)$ on $[-N_{ij}^-, N_{ij}^+]$ (see for instance (Apostol 1974, Theorem 4.17)), *i.e.* there exist positive constants $A_{ij}$ and $B_{ij}$ such that $|\sigma'_{ij}(s)| \leq A_{ij}$ and $|\sigma''_{ij}(s)| \leq B_{ij}$, $\forall s \in [-N_{ij}^-, N_{ij}^+]$. On the other hand, $\sigma'_{ij}(s) = \sigma''_{ij}(s) = 0$ when $|s| \geq N_{ij}^{\pm}$. Therefore, for any scalar $p > 0$, $|s^p \sigma'_{ij}(s)| \leq N_{ij}^p A_{ij}$ and $|s^p \sigma''_{ij}(s)| \leq N_{ij}^p B_{ij}$, $\forall s \in I\!R$, $\forall i,j = 1,2$,

with $N_{ij} \triangleq \max\{N_{ij}^-, N_{ij}^+\}$. Hence (see Eqs. (13))

$$|\rho_1(t)| \leq A_{12}[B_{u_1} + A_{11}C_1] \triangleq B_{\rho_1}$$

$$|\rho_2(t)| \leq A_{22}[B_{u_1} + A_{21}C_2 + 1] \triangleq B_{\rho_2}$$

$$|\mu_1(t)| \leq \frac{M_{12}B_{\rho_1}}{1 - M_{22}^+} + B_{\rho_2} \triangleq B_{\mu_1}$$

$\forall t \geq 0$, with

$$B_{u_1} \triangleq \sqrt{M_{12}^2 + (1 + M_{22}^-)^2} \tag{15}$$

$C_1 \triangleq N_{12} + M_{11} + B_{u_1}$, and $C_2 \triangleq N_{22} + M_{21} + B_{u_1} + 1$. Therefore,

$$|\omega_d(t)| \leq B_{\bar{\omega}_d} k$$

$t \geq 0$, with

$$B_{\bar{\omega}_d} \triangleq \frac{M_{12}B_{\rho_2}}{(1 - M_{22}^+)^2} + \frac{B_{\rho_1}}{(1 - M_{22}^+)}$$

(see Eqs. (11)), showing that $w_d$ is bounded and that its bound is directly influenced by $k$. Furthermore, assuming the existence of a finite time $t_1 \geq 0$ such that $|\dot{\theta}(t)| \leq D$, $\forall t \geq t_1$, for some initial-condition-independent positive constant $D$,[1] we have (see Eqs. (13))

$$|\varphi_1(t)| \leq B_{12}\left(\frac{B_{\rho_1}}{A_{12}}\right)^2 + A_{12}[C_3 + B_{11}C_1^2 + A_{11}C_4] \triangleq B_{\varphi_1}$$

$$|\varphi_2(t)| \leq B_{22}\left(\frac{B_{\rho_2}}{A_{22}}\right)^2 + A_{22}[C_3 + B_{21}C_2^2 + A_{21}(C_4 + 1)] \triangleq B_{\varphi_2}$$

$\forall t \geq t_1$, with $C_3 \triangleq \sqrt{(B_{u_1}D)^2 + B_{\mu_1}^2}$ and $C_4 \triangleq \sqrt{(B_{u_1}D)^2 + (B_{u_1} + B_{\mu_1})^2}$. As a result

$$|\alpha_d(t)| \leq B_{\bar{\alpha}_d} k \tag{16}$$

$t \geq t_1$, with

$$B_{\bar{\alpha}_d} \triangleq \frac{M_{12}B_{\varphi_2}}{(1 - M_{22}^+)^2} + \frac{B_{\varphi_1} + 2B_{\mu_1}B_{\bar{\omega}_d}}{(1 - M_{22}^+)}$$

(see Eqs. (12)), which shows that $\alpha_d$ is ultimately bounded and that its ultimate bound is also directly influenced by $k$.

[1]Such an assumption will be proved to be satisfied with $D = M_{41} + M_{42} + M_{31}$ in the second part of the proof.

*Second part.* Consider the rotational motion closed-loop dynamics, (1c) and (4), expressed in its state space representation defined according to (14):

$$\dot{z}_5 = z_6 \tag{17a}$$

$$\dot{z}_6 = \sigma_{41}(\alpha_d) - \sigma_{32}\big(z_6 - \sigma_{42}(\omega_d) + \sigma_{31}(z_6 - \sigma_{43}(\omega_d) + z_5 - \theta_d)\big) \tag{17b}$$

Let us define the positive scalar function $V_1 \triangleq z_6^2$. Its derivative along the trajectories of subsystem (17), $\dot{V}_1$, is given by

$$\dot{V}_1 = 2z_6\dot{z}_6 = 2z_6[\sigma_{41}(\alpha_d) - \sigma_{32}(s_{32})] \tag{18}$$

where

$$s_{32} \triangleq z_6 - \sigma_{42}(\omega_d) + \sigma_{31}(z_6 - \sigma_{43}(\omega_d) + z_5 - \theta_d)$$

Suppose for the moment that $z_6 > M_{41} + M_{42} + M_{31} > 0$. Under such an assumption, we have

$$s_{32} = z_6 - \sigma_{42}(\omega_d) + \sigma_{31}(\cdot) > z_6 - M_{42} - M_{31} > M_{41} > 0$$

Then, according to Definition 3.1, either $\sigma_{32}(\cdot) \in (0, L_{32}]$, implying

$$\dot{z}_6 = \sigma_{41}(\cdot) - z_6 + \sigma_{42}(\cdot) - \sigma_{31}(\cdot) < M_{41} + M_{42} + M_{31} - z_6 < 0$$

or $\sigma_{32}(\cdot) \in (L_{32}, M_{32}]$, entailing

$$\dot{z}_6 = \sigma_{41}(\cdot) - \sigma_{32}(\cdot) < M_{41} - L_{32} < M_{41} + 2M_{42} + 2M_{31} - L_{32} < 0$$

(see (9b)), *i.e.*

$$z_6 > M_{41} + M_{42} + M_{31} > 0 \Longrightarrow \dot{z}_6 < 0 \tag{19}$$

Similarly, if $z_6 < -M_{41} - M_{42} - M_{31} < 0$, then

$$s_{32} = z_6 - \sigma_{42}(\omega_d) + \sigma_{31}(\cdot) < z_6 + M_{42} + M_{31} < -M_{41} < 0$$

Hence, either $\sigma_{32}(\cdot) \in [-L_{32}, 0)$, entailing

$$\dot{z}_6 = \sigma_{41}(\cdot) - z_6 + \sigma_{42}(\cdot) - \sigma_{31}(\cdot) > -M_{41} - M_{42} - M_{31} - z_6 > 0$$

or $\sigma_{32}(\cdot) \in [-M_{32}, -L_{32})$, implying

$$\dot{z}_6 = \sigma_{41}(\cdot) - \sigma_{32}(\cdot) > -M_{41} + L_{32} > -M_{41} - 2M_{42} - 2M_{31} + L_{32} > 0$$

(according to (9b)), *i.e.*

$$z_6 < -M_{41} - M_{42} - M_{31} < 0 \Longrightarrow \dot{z}_6 > 0 \tag{20}$$

Hence, from (19) and (20), one sees that

$$|z_6| > M_{41} + M_{42} + M_{31} \Longrightarrow \mathrm{sign}(z_6) = -\mathrm{sign}(\dot{z}_6) \Longrightarrow \dot{V}_1 < 0$$

This proves that, for any initial state vector $z(0) \in I\!R^6$, there is a finite time $t_1 \geq 0$ such that

$$|z_6(t)| \leq M_{41} + M_{42} + M_{31} \triangleq D$$

$\forall t \geq t_1$.[1] Then, for all $t \geq t_1$, we have

$$|s_{32}| \leq |z_6| + M_{42} + M_{31} \leq M_{41} + 2M_{42} + 2M_{31} < L_{32}$$

(in view of (9b)). Therefore, according to Definition 3.1, $\sigma_{32}(s_{32}) = s_{32}$ and (17b) becomes

$$\dot{z}_6 = \sigma_{41}(\alpha_d) - z_6 + \sigma_{42}(\omega_d) - \sigma_{31}(z_6 - \sigma_{43}(\omega_d) + z_5 - \theta_d) \tag{21}$$

from $t_1$ on. At this stage, let us define $q \triangleq z_5 + z_6$ and the positive scalar function $V_2 \triangleq q^2$. The derivative of $V_2$ along the trajectories of subsystem (17a) and (21), $\dot{V}_2$, is given by

$$\dot{V}_2 = 2q\dot{q} = 2q[\sigma_{41}(\alpha_d) + \sigma_{42}(\omega_d) - \sigma_{31}(s_{31})]$$

where

$$s_{31} \triangleq q - \sigma_{43}(\omega_d) - \theta_d$$

Following a reasoning similar to the one developed for the analysis of $\dot{V}_1$ in (18) (relying on the satisfaction of inequality (9c)), one sees that

$$|q| > M_{41} + M_{42} + M_{43} + B_{\theta_d} \Longrightarrow \text{sign}(q) = -\text{sign}(\dot{q}) \Longrightarrow \dot{V}_2 < 0$$

proving that, for any $z(0) \in I\!R^6$, there exists a finite time $t_2 \geq t_1$ such that

$$|q(t)| \leq M_{41} + M_{42} + M_{43} + B_{\theta_d}$$

$\forall t \geq t_2$. Hence, for all $t \geq t_2$, we have

$$|s_{31}| \leq |q| + M_{43} + B_{\theta_d} < M_{41} + M_{42} + 2M_{43} + 2B_{\theta_d} < L_{31}$$

(see (9c)). Thus, according to Definition 3.1, $\sigma_{31}(s_{31}) = s_{31}$ and (21) becomes

$$\dot{z}_6 = \sigma_{41}(\alpha_d) - (z_6 - \sigma_{42}(\omega_d)) - (z_6 - \sigma_{43}(\omega_d)) - (z_5 - \theta_d) \tag{22}$$

from $t_2$ on. Now, from the first part of the proof, one sees that a sufficiently small value of $k$ can be chosen such that $|\omega_d(t)| < \min\{L_{42}, L_{43}\}$ and $|\alpha_d(t)| < L_{41}$, $\forall t \geq t_1$. Therefore, provided that such a choice of $k$ is made, the value of every linear saturation function in (22) is equal to that of its arguments (according to Definition 3.1) from $t_1$ on. Hence, for all $t \geq t_2$, the rotational motion closed-loop dynamics, expressed in the original variables, becomes

$$\ddot{\theta} = \alpha_d - 2(\dot{\theta} - \omega_d) - (\theta - \theta_d) = u_2 \tag{23}$$

Observe that this part of the proof shows that for any $z(0) \in I\!R^6$, provided that $k$ is small enough,

$$(\theta(t), \dot{\theta}(t)) \in \mathcal{S}_0 \triangleq \left\{(\theta, \dot{\theta}) \in I\!R^2 : |\dot{\theta}| \leq D \ , \ |\theta + \dot{\theta}| \leq M_{41} + M_{42} + M_{43} + B_{\theta_d}\right\}$$

[1]Recall that this was assumed in the first part of the proof. Thus, it is shown that such an assumption is actually a fact.

$\forall t \geq t_2$, where the value of every linear saturation in $u_2$ (see (4)) is equal to that of its argument.

*Third part.* Let

$$\dot{\theta}_d \triangleq \left.\frac{d\theta_d}{dt}\right|_{\varepsilon\geq 0} \qquad \text{and} \qquad \ddot{\theta}_d \triangleq \left.\frac{d^2\theta_d}{dt^2}\right|_{\varepsilon\geq 0}$$

From the definition of $\theta_d$ in equation (7), the system dynamics in (1), and the proposed scheme, we get, from $t_2$ on (consequently taking $u_2$ as in (23)):

$$\dot{\theta}_d = \omega_d + \varepsilon k \Delta_1 \tag{24}$$

$$\ddot{\theta}_d = \alpha_d + \varepsilon k \Delta_2 \tag{25}$$

with $\Delta_1$ and $\Delta_2$ as expressed in Appendix A.

**Remark 2 :** Carrying out a procedure similar to the one followed in the first part of the proof, it can be shown that there exist positive constants $B_{\Delta_1}$ and $B_{\Delta_2}$ such that $|\Delta_1| \leq B_{\Delta_1}$ and $|\Delta_2| \leq B_{\Delta_2}$ for any value of the system states. Estimations of these bounds were obtained in (López-Araujo 2008, Appendix D).

Let

$$e = \begin{pmatrix} e_1 \\ e_2 \end{pmatrix} \triangleq \begin{pmatrix} \theta - \theta_d \\ \dot{\theta} - \dot{\theta}_d \end{pmatrix}$$

From equations (23)–(25), we have that

$$\dot{e} = A_0 e + h(t, e) \tag{26}$$

from $t_2$ on, with

$$A_0 = \begin{pmatrix} 0 & 1 \\ -1 & -2 \end{pmatrix} \qquad \text{and} \qquad h(t,e) = -\varepsilon k \begin{pmatrix} 0 \\ 2\Delta_1 + \Delta_2 \end{pmatrix}$$

(where the trajectories of the translational motion dynamics, involved in $h$, are being considered external time-varying functions). Let us define a quadratic positive definite function $V_3(e) \triangleq e^T P_0 e$, where $P_0$ is the (unique) solution of the Lyapunov equation $P_0 A_0 + A_0^T P_0 = -I_2$, *i.e* $P_0 = \begin{pmatrix} \frac{3}{2} & \frac{1}{2} \\ \frac{1}{2} & \frac{1}{2} \end{pmatrix}$. For such a $P_0$, we have that $\lambda_{\max}(P_0) = \frac{2+\sqrt{2}}{2}$ and $\lambda_{\min}(P_0) = \frac{2-\sqrt{2}}{2} > 0$. The derivative of $V_3(e)$ along the trajectories of subsystem (26) is given by

$$\begin{aligned} \dot{V}_3(e) &= e^T P_0 [A_0 e + h(t,e)] + [A_0 e + h(t,e)]^T P_0 e \\ &= -e^T e + 2 e^T P_0 h(t,e) \\ &\leq -\|e\|^2 + 2\lambda_{\max}(P_0)\|e\|\|h(t,e)\| \\ &\leq -\|e\|^2 + \varepsilon k (2+\sqrt{2})\|e\|(2B_{\Delta_1} + B_{\Delta_2}) \end{aligned}$$

(see Remark **2**). Defining $B_\Delta \triangleq 2B_{\Delta_1} + B_{\Delta_2}$, we can rewrite the foregoing inequality as

$$\dot{V}_3(e) \leq -(1-\phi_1)\|e\|^2 - \|e\| \left[\phi_1 \|e\| - \varepsilon k (2+\sqrt{2}) B_\Delta\right]$$

where $\phi_1$ is a strictly positive constant less than unity, *i.e.* $0 < \phi_1 < 1$. Then

$$\dot{V}_3(e) \leq -(1-\phi_1)\|e\|^2 \qquad \forall \|e\| \geq \frac{\varepsilon k(2+\sqrt{2})B_\Delta}{\phi_1}$$

Thus, from (Khalil 2002, Theorem 4.18), there exists a finite time $t_3 \geq t_2$ such that

$$\|e(t)\| \leq \varepsilon k B_{\bar{e}} \qquad \forall t \geq t_3 \tag{27}$$

with

$$B_{\bar{e}} \triangleq \frac{(4+3\sqrt{2})B_\Delta}{\phi_1}$$

In other words, for any $z(t_2) \in I\!R^4 \times \mathcal{S}_0$,

$$e(t) \in \mathcal{B}_1 \triangleq \left\{ e \in I\!R^2 : \|e\| \leq \varepsilon k B_{\bar{e}} \right\} \qquad t \geq t_3 \tag{28}$$

<u>*Fourth part.*</u> Let

$$z_T \triangleq \begin{pmatrix} z_1 & z_2 & z_3 & z_4 \end{pmatrix}^T \quad \text{and} \quad \zeta \triangleq \begin{pmatrix} z_T^T & e^T \end{pmatrix}^T$$

**Remark 3 :** One can verify, from the expressions defining $\theta_d$ and $\dot{\theta}_d$, that $\zeta = 0_6 \iff z = 0_6$.

Observe that, from $t_3$ on, the translational motion closed-loop dynamics, (1a), (1b), (3)–(7), can be expressed as

$$\dot{z}_1 = z_2 \tag{29a}$$

$$\dot{z}_2 = -k\sigma_{12}(z_2 + \sigma_{11}(kz_1 + z_2)) + R_1(\zeta) \tag{29b}$$

$$\dot{z}_3 = z_4 \tag{29c}$$

$$\dot{z}_4 = -\sigma_{22}(z_4 + \sigma_{21}(z_3 + z_4)) + R_2(\zeta) \tag{29d}$$

where

$$R_1(\zeta) = -u_1\left[\sin(e_1+\theta_d) - \sin\theta_d\right] + \varepsilon u_2 \cos(e_1+\theta_d)$$

and

$$R_2(\zeta) = u_1\left[\cos(e_1+\theta_d) - \cos\theta_d\right] + \varepsilon u_2 \sin(e_1+\theta_d)$$

with

$$u_2 = \alpha_d - 2e_2 - e_1 + 2\varepsilon k \Delta_1 \tag{30}$$

Let us note that from (27), (30), and the facts that $|\alpha_d| \leq kB_{\bar{\alpha}_d}$ (see (16)), $|\sin(e_1+\theta_d) - \sin\theta_d| \leq |e_1|$, $|\cos(e_1+\theta_d) - \cos\theta_d| \leq |e_1|$, $|e_1| \leq \|e\|$, and $|2e_2 + e_1| = |(1 \quad 2)e| \leq \|(1 \quad 2)\|\|e\| = \sqrt{5}\|e\|$, we have

$$|R_i(\zeta(t))| \leq \varepsilon k B_{\bar{R}_i}$$

$i = 1, 2$, $\forall t \geq t_3$, with

$$B_{\bar{R}_i} \triangleq B_{\bar{\alpha}_d} + 2\varepsilon B_{\Delta_1} + B' B_{\bar{e}}$$

where $B' \triangleq B_{u_1} + \sqrt{5}\varepsilon$, with $B_{u_1}$ as defined in (15). Further, observe that in view of the boundedness of the terms involved in the translational motion closed-loop dynamics, *i.e.* (1a), (1b), (3)–(7), $z_T(t)$ exists and is bounded at any finite time $t \geq 0$.[1]

We begin by analyzing the vertical motion closed-loop dynamics, *i.e.* equations (29c) and (29d). Suppose that $\varepsilon k$ is small enough to satisfy

$$\varepsilon k B_{\bar{R}_i} \leq \min\{L_{21}, L_{22} - 2M_{21}, kL_{11}, k(L_{12} - 2M_{11})\} \tag{31}$$

Let us define the positive scalar function $V_4 = z_4^2$. Its derivative along the system trajectories is given by

$$\dot{V}_4 = 2z_4\dot{z}_4 = 2z_4\left[-\sigma_{22}(z_4 + \sigma_{21}(z_3 + z_4)) + R_2(\zeta)\right] \tag{32}$$

Suppose for the moment that $z_4 > M_{21} + \varepsilon k B_{\bar{R}_i} > 0$. Under such an assumption, we have

$$z_4 + \sigma_{21}(\cdot) \geq z_4 - M_{21} > \varepsilon k B_{\bar{R}_i} > 0$$

Then, according to Definition 3.2, either $\sigma_{22}(\cdot) \in (0, L_{22}^+]$, implying

$$\dot{z}_4 = -z_4 - \sigma_{21}(\cdot) + R_2(\zeta) < -z_4 + M_{21} + \varepsilon k B_{\bar{R}_i} < 0$$

or $\sigma_{22}(\cdot) \in (L_{22}^+, M_{22}^+]$, entailing

$$\dot{z}_4 = -\sigma_{22}(\cdot) + R_2(\zeta) < -L_{22}^+ + \varepsilon k B_{\bar{R}_i} < 0$$

since, according to (31), $\varepsilon k B_{\bar{R}_i} \leq L_{22} - 2M_{21} < L_{22} \leq L_{22}^+$. Hence,

$$z_4 > M_{21} + \varepsilon k B_{\bar{R}_i} > 0 \implies \dot{z}_4 < 0 \tag{33}$$

Similarly, if $z_4 < -M_{21} - \varepsilon k B_{\bar{R}_i} < 0$, which implies

$$z_4 + \sigma_{21}(\cdot) \leq z_4 + M_{21} < -\varepsilon k B_{\bar{R}_i} < 0$$

then either $\sigma_{22}(\cdot) \in [-L_{22}^-, 0)$ entailing

$$\dot{z}_4 = -z_4 - \sigma_{21}(\cdot) + R_2(\zeta) > -z_4 - M_{21} - \varepsilon k B_{\bar{R}_i} > 0$$

or $\sigma_{22}(\cdot) \in [-M_{22}^-, -L_{22}^-)$ implying

$$\dot{z}_4 = -\sigma_{22}(\cdot) + R_2(\zeta) > L_{22}^- - \varepsilon k B_{\bar{R}_i} > 0$$

since, according to (31), $\varepsilon k B_{\bar{R}_i} \leq L_{22} - 2M_{21} < L_{22} \leq L_{22}^-$. Thus,

$$z_4 < -M_{21} - \varepsilon k B_{\bar{R}_i} < 0 \implies \dot{z}_4 > 0 \tag{34}$$

[1]In particular, for any $\tau \geq 0$, $|z_2(t)| \leq |z_2(0)| + F\tau$ and $|z_1(t)| \leq |z_1(0)| + |z_2(0)|\tau + \frac{F}{2}\tau^2$, $\forall t \in [0, \tau]$, where $F \triangleq \sqrt{B_{u_1}^2 + (\varepsilon B_{u_2})^2}$, with $B_{u_2} = M_{41} + M_{32}$, while $|z_4(t)| \leq |z_4(0)| + (F+1)\tau$ and $|z_3(t)| \leq |z_3(0)| + |z_4(0)|\tau + \frac{(F+1)}{2}\tau^2$, $\forall t \in [0, \tau]$.

Therefore, from (33) and (34), we see that

$$|z_4| > M_{21} + \varepsilon k B_{\bar{R}_i} \implies \text{sign}(z_4) = -\text{sign}(\dot{z}_4) \implies \dot{V}_4 < 0$$

This proves that, for any $\zeta(t_3) \in I\!R^4 \times \mathcal{B}_1$, there exists a finite time $t_4 \geq t_3$ such that

$$|z_4(t)| \leq M_{21} + \varepsilon k B_{\bar{R}_i}$$

$\forall t \geq t_4$. Then, for all $t \geq t_4$, we have

$$|z_4 + \sigma_{21}(\cdot)| \leq |z_4| + M_{21} \leq 2M_{21} + \varepsilon k B_{\bar{R}_i} \leq L_{22}$$

since, from (31), $\varepsilon k B_{\bar{R}_i} \leq L_{22} - 2M_{21}$. Consequently, according to item (a) of Definition 3.2,

$$\sigma_{22}(z_4 + \sigma_{21}(\cdot)) = z_4 + \sigma_{21}(\cdot)$$

and (29d) becomes

$$\dot{z}_4 = -z_4 - \sigma_{21}(z_3 + z_4) + R_2(\zeta) \tag{35}$$

from $t_4$ on. Let us now define $q_1 \triangleq z_3 + z_4$ and the scalar positive function $V_5 \triangleq q_1^2$. The derivative of $V_5$ along the system trajectories is given by

$$\dot{V}_5 = 2q_1\dot{q}_1 = 2q_1\left[-\sigma_{21}(q_1) + R_2(\zeta)\right]$$

Following a reasoning similar to the one developed for the analysis of $\dot{V}_4$ in (32), one sees that

$$|q_1| > \varepsilon k B_{\bar{R}_i} \implies \text{sign}(q_1) = -\text{sign}(\dot{q}_1) \implies \dot{V}_5 < 0$$

Hence, for any $\zeta(t_3) \in I\!R^4 \times \mathcal{B}_1$, there exists a finite time $t_5 \geq t_4$ such that

$$|q_1(t)| \leq \varepsilon k B_{\bar{R}_i} \leq L_{21}$$

(see (31)), $\forall t \geq t_5$. Consequently, according to item (a) of Definition 3.2,

$$\sigma_{21}(z_3 + z_4) = z_3 + z_4$$

and (35) becomes

$$\dot{z}_4 = -z_3 - 2z_4 + R_2(\zeta)$$

from $t_5$ on. At this point, we have that, for any $\zeta(t_3) \in I\!R^4 \times \mathcal{B}_1$, provided that $\varepsilon k$ is small enough,

$$(z_3(t), z_4(t)) \in \mathcal{S}_1 \triangleq \left\{(z_3, z_4) \in I\!R^2 : |z_4| \leq M_{21} + \varepsilon k B_{\bar{R}_i}\ ,\ |z_3 + z_4| \leq L_{21}\right\} \tag{36}$$

$\forall t \geq t_5$, where the value of every two-level linear saturation function involved in $r_2$ (see (6)) is equal to that of its arguments.

Let us now analyze the horizontal motion closed-loop dynamics, *i.e.* equations (29a) and (29b). We define the positive scalar function $V_6 = z_2^2$. Its derivative along the system trajectories is

given by

$$\dot{V}_6 = 2z_2\dot{z}_2 = 2z_2\left[-k\sigma_{12}(z_2 + \sigma_{11}(kz_1 + z_2)) + R_1(\zeta)\right]$$

Following a procedure similar to the one developed above for the analysis of $\dot{V}_4$ in (32), one sees that

$$|z_2| > M_{11} + \varepsilon B_{\bar{R}_i} \implies \text{sign}(z_2) = -\text{sign}(\dot{z}_2) \implies \dot{V}_6 < 0$$

This proves that, for any $\zeta(t_3) \in I\!R^4 \times \mathcal{B}_1$, there exists a finite time $t_6 \geq t_3$ such that

$$|z_2(t)| \leq M_{11} + \varepsilon B_{\bar{R}_i}$$

$\forall t \geq t_6$. Then, for all $t \geq t_6$

$$|z_2 + \sigma_{11}(\cdot)| \leq |z_2| + M_{11} \leq 2M_{11} + \varepsilon B_{\bar{R}_i} \leq L_{12}$$

since, from (31), $\varepsilon B_{\bar{R}_i} \leq L_{12} - 2M_{11}$. Consequently, according to item (a) of Definition 3.2,

$$\sigma_{12}(z_2 + \sigma_{11}(\cdot)) = z_2 + \sigma_{11}(\cdot)$$

and (29b) becomes

$$\dot{z}_2 = -kz_2 - k\sigma_{11}(kz_1 + z_2) + R_1(\zeta) \tag{37}$$

from $t_6$ on. Let us now define $q_2 \triangleq kz_1 + z_2$ and the positive scalar function $V_7 \triangleq q_2^2$. The derivative of $V_7$ along the system trajectories is given by

$$\dot{V}_7 = 2q_2\dot{q}_2 = 2q_2\left[-k\sigma_{11}(q_2) + R_1(\zeta)\right]$$

Following a reasoning similar to the one developed above, one sees that

$$|q_2| > \varepsilon B_{\bar{R}_i} \implies \text{sign}(q_2) \neq \text{sign}(\dot{q}_2) \implies \dot{V}_7 < 0$$

Hence, for any $\zeta(t_3) \in I\!R^4 \times \mathcal{B}_1$, there exists a time $t_7 \geq t_6$ such that

$$|q_2(t)| \leq \varepsilon B_{\bar{R}_i} \leq L_{11}$$

(see (31)), $\forall t \geq t_7$. Consequently, according to item (a) of Definition 3.2,

$$\sigma_{11}(kz_1 + z_2) = kz_1 + z_2$$

and (37) becomes

$$\dot{z}_2 = -k^2 z_1 - 2kz_2 + R_1(\zeta)$$

from $t_7$ on. Thus, we have that, for any $\zeta(t_3) \in I\!R^4 \times \mathcal{B}_1$, provided that $\varepsilon k$ is small enough,

$$(z_1(t), z_2(t)) \in \mathcal{S}_2 \triangleq \left\{(z_1, z_2) \in I\!R^2 : |z_2| \leq M_{11} + \varepsilon B_{\bar{R}_i}\ ,\ |kz_1 + z_2| \leq L_{11}\right\} \tag{38}$$

$\forall t \geq t_7$, where the value of every two-level linear saturation function involved in $r_1$ (see (5)) is equal to that of its argument. Finally, from (36) and (38) we see that, for any $\zeta(t_3) \in I\!R^4 \times \mathcal{B}_1$, provided that $\varepsilon k$ is small enough,

$$z_T(t) \in \mathcal{S}_{12} \triangleq \mathcal{S}_1 \times \mathcal{S}_2 \qquad \forall t \geq t' \triangleq \max\{t_5, t_7\}$$

where the value of every two-level linear saturation in $u_1$ (see (3)) is equal to that of its argument. More generally, considering (28),

$$\zeta(t) \in \mathcal{S}_{12} \times \mathcal{B}_1 \qquad \forall t \geq t' \tag{39}$$

where the value of every linear saturation in $u_1$ and $u_2$ (see (3) and (4)) is equal to that of its arguments.

*Fifth part.* As a consequence of the precedent analysis, the closed-loop system may be expressed, from $t'$ on, as

$$\dot{\zeta} = A_1\zeta + g(\zeta)$$

where

$$A_1 = \begin{pmatrix} 0 & 1 & 0 & 0 & 0 & 0 \\ -k^2 & -2k & 0 & 0 & 0 & 0 \\ 0 & 0 & 0 & 1 & 0 & 0 \\ 0 & 0 & -1 & -2 & 0 & 0 \\ 0 & 0 & 0 & 0 & 0 & 1 \\ 0 & 0 & 0 & 0 & -1 & -2 \end{pmatrix} \quad , \quad g(\zeta) = \begin{pmatrix} 0 \\ -u_1 \sin(e_1+\theta_d) + u_1 \sin\theta_d + \varepsilon u_2 \cos(e_1+\theta_d) \\ 0 \\ u_1 \cos(e_1+\theta_d) - u_1 \cos\theta_d + \varepsilon u_2 \sin(e_1+\theta_d) \\ 0 \\ \varepsilon k(2\Delta_1 + \Delta_2) \end{pmatrix}$$

The characteristic polynomial of $A_1$ is given by $|\lambda I_6 - A_1| = (\lambda+k)^2(\lambda+1)^4$ wherefrom it is clear that $A_1$ is Hurwitz. Hence there exists a (unique) positive definite symmetric matrix $P_1$ that solves the Lyapunov equation $P_1A_1 + A_1^TP_1 = -I_6$. Let us, on the other hand, note that, on $\mathcal{S}_{12} \times \mathcal{B}_1$ (see (39) and (28)):

$$\begin{aligned}
\|g(\zeta)\|^2 = {} & (-u_1 \sin(e_1+\theta_d) + u_1 \sin\theta_d + \varepsilon u_2 \cos(e_1+\theta_d))^2 \\
& + (u_1 \cos(e_1+\theta_d) - u_1 \cos\theta_d + \varepsilon u_2 \sin(e_1+\theta_d))^2 + (\varepsilon k)^2(2\Delta_1+\Delta_2)^2 \\
= {} & u_1^2 \left[(\sin(e_1+\theta_d) - \sin\theta_d)^2 + (\cos(e_1+\theta_d) - \cos\theta_d)^2\right] \\
& - 2\varepsilon u_1 u_2 \left[\sin(e_1+\theta_d)\cos\theta_d - \sin\theta_d \cos(e_1+\theta_d)\right] \\
& + (\varepsilon u_2)^2 \left[\sin^2(e_1+\theta_d) + \cos^2(e_1+\theta_d)\right] + (\varepsilon k)^2(2\Delta_1+\Delta_2)^2 \\
= {} & u_1^2 \left[(\sin(e_1+\theta_d) - \sin\theta_d)^2 + (\cos(e_1+\theta_d) - \cos\theta_d)^2\right] \\
& - 2\varepsilon u_1 u_2 \sin e_1 + (\varepsilon u_2)^2 + (\varepsilon k)^2(2\Delta_1+\Delta_2)^2 \\
\leq {} & 2B_{u_1}^2|e_1|^2 + 2\varepsilon k B_{u_1} B_{\bar{u}_2}|e_1| + (\varepsilon k)^2 B_{\bar{u}_2}^2 + (\varepsilon k)^2(2B_{\Delta_1} + B_{\Delta_2})^2 \\
\leq {} & 2B_{u_1}^2\|e\|^2 + 2\varepsilon k B_{u_1} B_{\bar{u}_2}\|e\| + (\varepsilon k)^2 B_{\bar{u}_2}^2 + (\varepsilon k)^2(2B_{\Delta_1} + B_{\Delta_2})^2 \\
\leq {} & (\varepsilon k)^2 \left[2B_{u_1}B_{\bar{e}}(B_{u_1}B_{\bar{e}} + B_{\bar{u}_2}) + B_{\bar{u}_2}^2 + (2B_{\Delta_1} + B_{\Delta_2})^2\right]
\end{aligned}$$

*i.e.*

$$\|g(\zeta)\| \leq \varepsilon k B_{\bar{g}}$$

with

$$B_{\bar{g}} \triangleq \sqrt{2B_{u_1}B_{\bar{e}}(B_{u_1}B_{\bar{e}} + B_{\bar{u}_2}) + B_{\bar{u}_2}^2 + (2B_{\Delta_1} + B_{\Delta_2})^2}$$

where $B_{\bar{u}_2} = B_{\bar{\alpha}_d} + \varepsilon\sqrt{5}B_{\bar{e}} + 2\varepsilon B_{\Delta_1}$ and the facts that $|\alpha_d| \leq kB_{\bar{\alpha}_d}$ (see (16)), $|2e_2 + e_1| = |(1 \quad 2)e| \leq \|(1 \quad 2)\|\|e\| = \sqrt{5}\|e\|$, $|\sin(e_1 + \theta_d) - \sin\theta_d| \leq |e_1|$, $|\cos(e_1 + \theta_d) - \cos\theta_d| \leq |e_1|$, $|e_1| \leq \|e\|$, and (27), have been considered.

Now, let us define the quadratic Lyapunov candidate function $V_8(\zeta) = \zeta^T P_1 \zeta$. On $\mathcal{S}_{12} \times \mathcal{B}_1$ (see (39)), its derivative along the system trajectories is given by

$$\begin{aligned}
\dot{V}_8(\zeta) &= \zeta^T P_1[A_1\zeta + g(\zeta)] + [A_1\zeta + g(\zeta)]^T P_1\zeta \\
&= -\zeta^T\zeta + 2\zeta^T P_1 g(\zeta) \\
&\leq -\|\zeta\|^2 + 2\lambda_{\max}(P_1)\|\zeta\|\|g(\zeta)\| \\
&\leq -(1-\phi_2)\|\zeta\|^2 - \phi_2\|\zeta\|^2 + 2\varepsilon k B_{\bar{g}}\lambda_{\max}(P_1)\|\zeta\| \\
&\leq -(1-\phi_2)\|\zeta\|^2 \qquad , \qquad \forall\|\zeta\| > \frac{2\varepsilon k B_{\bar{g}}\lambda_{\max}(P_1)}{\phi_2}
\end{aligned}$$

where $\phi_2$ is a strictly positive constant less than unity, *i.e.* $0 < \phi_2 < 1$. Thus, according to (Khalil 2002, Theorem 4.18), there exists a finite time $t_8 \geq t'$ such that

$$\|\zeta(t)\| \leq \varepsilon k B_{\bar{\zeta}} \tag{40}$$

for all $t \geq t_8$, with

$$B_{\bar{\zeta}} \triangleq \frac{2B_{\bar{g}}\lambda_{\max}(P_1)}{\phi_2}\sqrt{\frac{\lambda_{\max}(P_1)}{\lambda_{\min}(P_1)}}$$

In other words, for any $\zeta(t') \in \mathcal{S}_{12} \times \mathcal{B}_1$,

$$\zeta(t) \in \mathcal{B}_2 \triangleq \left\{\zeta \in I\!R^6 : \|\zeta\| \leq \varepsilon k B_{\bar{\zeta}}\right\} \qquad \forall t \geq t_8 \tag{41}$$

where, according to the precedent parts of the proof, the value of every linear saturation in $u_1$ and $u_2$ is equal to that of its argument.

**Remark 4 :** Observe that $\mathcal{B}_2$ is a positively invariant compact set containing $0_6$.

*Sixth part.* From $t_8$ on, the closed-loop system dynamics may be written as

$$\dot{\zeta} = A_2\zeta + \bar{g}(\zeta)$$

where

$$A_2 = \begin{pmatrix} 0 & 1 & 0 & 0 & 0 & 0 \\ -k^2 & -2k & 0 & 0 & -1 & 0 \\ 0 & 0 & 0 & 1 & 0 & 0 \\ 0 & 0 & -1 & -2 & 0 & 0 \\ 0 & 0 & 0 & 0 & 0 & 1 \\ 0 & 0 & 0 & 0 & -1 & -2 \end{pmatrix}$$

and

$$\bar{g}(\zeta) = \tilde{g}(\zeta) + \varepsilon \hat{g}(\zeta) \tag{42}$$

with

$$\tilde{g}(\zeta) = \begin{pmatrix} 0 \\ -u_1[\sin(e_1+\theta_d) - u_1 \sin\theta_d] + e_1 \\ 0 \\ u_1[\cos(e_1+\theta_d) - u_1\cos\theta_d] \\ 0 \\ 0 \end{pmatrix} \qquad \text{and} \qquad \hat{g}(\zeta) = \begin{pmatrix} 0 \\ u_2\cos(e_1+\theta_d) \\ 0 \\ u_2\sin(e_1+\theta_d) \\ 0 \\ k(2\Delta_1+\Delta_2) \end{pmatrix}$$

and $\zeta$ evolves in $\mathcal{B}_2$ (see (41)) where $\sigma_{ij}(s_{ij}) = s_{ij}$ in $u_1$ and $\sigma_{mn}(s_{mn}) = s_{mn}$ in $u_2$, and consequently $\sigma'_{ij}(\cdot) = 1$, $\sigma''_{ij}(\cdot) = \sigma'''_{ij}(\cdot) = 0$, and $\sigma'_{mn}(\cdot) = 1$, $\sigma''_{mn}(\cdot) = 0$. Let us note that, after several basic developments, we have

$$\frac{\partial \tilde{g}_2}{\partial z_i} = (1-\cos e_1) i k^{3-i} \qquad \forall i = 1,2$$

$$\frac{\partial \tilde{g}_2}{\partial z_j} = (j-2)\sin e_1 \qquad \forall j = 3,4$$

$$\frac{\partial \tilde{g}_2}{\partial e_1} = -u_1[\cos(e_1+\theta_d) - \cos\theta_d] - r_2$$

$$\frac{\partial \tilde{g}_2}{\partial e_2} = 0$$

and

$$\frac{\partial \tilde{g}_4}{\partial z_i} = -i k^{3-i} \sin e_1 \qquad \forall i = 1,2$$

$$\frac{\partial \tilde{g}_4}{\partial z_j} = (2-j)(\cos e_1 - 1) \qquad \forall j = 3,4$$

$$\frac{\partial \tilde{g}_4}{\partial e_1} = -u_1[\sin(e_1+\theta_d) - \sin\theta_d] + r_1$$

$$\frac{\partial \tilde{g}_4}{\partial e_2} = 0$$

Hence

$$\begin{aligned}\sum_{i=1}^{6}\left|\frac{\partial\tilde{g}_2}{\partial\zeta_i}\right| &\leq k(k+2)|1-\cos e_1|+3|\sin e_1|+u_1|\cos(e_1+\theta_d)-\cos\theta_d|+|(1\quad 2)\cdot(z_3\quad z_4)^T| \\ &\leq (k^2+2k)|e_1|+3|e_1|+B_{u_1}|e_1|+\sqrt{5}\|(z_3\quad z_4)\| \\ &\leq (k^2+2k+3+\sqrt{5}+B_{u_1})\|\zeta\|\end{aligned}$$

and

$$\begin{aligned}\sum_{i=1}^{6}\left|\frac{\partial\tilde{g}_4}{\partial\zeta_i}\right| &\leq k(k+2)|\sin e_1|+3|\cos e_1-1|+u_1|\sin(e_1+\theta_d)-\sin\theta_d|+|(k^2\quad 2k)\cdot(z_1\quad z_2)^T| \\ &\leq (k^2+2k)|e_1|+3|e_1|+B_{u_1}|e_1|+k\sqrt{k^2+4}\|(z_1\quad z_2)\| \\ &\leq (k^2+2k+3+k\sqrt{k^2+4}+B_{u_1})\|\zeta\| \\ &\leq (k^2+2k+3+\sqrt{5}+B_{u_1})\|\zeta\|\end{aligned}$$

where the facts that $|\sin e_1| \leq |e_1|$, $|\cos e_1 - 1| \leq |e_1|$, $|e_1| \leq \|\zeta\|$, $|(1\quad 2)(z_3\quad z_4)^T| \leq \|(1\quad 2)\| \cdot \|(z_3\quad z_4)\| = \sqrt{5}\|(z_3\quad z_4)\|$, $|(k^2\quad 2k)(z_1\quad z_2)^T| \leq \|(k^2\quad 2k)\| \cdot \|(z_1\quad z_2)\| \leq k\sqrt{k^2+4}\|(z_1\quad z_2)\| \leq \sqrt{5}\|(z_1\quad z_2)\|$, and $\|(z_j\quad z_{j+1})\| \leq \|\zeta\|$ with $j=1$ or $j=3$, were considered. Then,

$$\left\|\frac{\partial\tilde{g}}{\partial\zeta}\right\|_\infty \leq (k^2+2k+3+\sqrt{5}+B_{u_1})\|\zeta\|$$

and consequently

$$\left\|\frac{\partial\tilde{g}}{\partial\zeta}\right\| \leq \sqrt{6}(k^2+2k+3+\sqrt{5}+B_{u_1})\|\zeta\|$$

since $\left\|\frac{\partial\tilde{g}}{\partial\zeta}\right\| \leq \sqrt{6}\left\|\frac{\partial\tilde{g}}{\partial\zeta}\right\|_\infty$ (see for instance Exercise 2.2 in the 2nd edition of Khalil (2002)). Hence

$$\left\|\frac{\partial\tilde{g}}{\partial\zeta}\right\| \leq \varepsilon k B_{\tilde{g}} \qquad \forall\zeta\in\mathcal{B}_2$$

with

$$B_{\tilde{g}} \triangleq \sqrt{6}(k^2+2k+3+\sqrt{5}+B_{u_1})B_{\bar{\zeta}}$$

where (40) has been considered. From this and the easily verifiable fact that $\tilde{g}(0_6)=0_6$, we have that $\|\tilde{g}(\zeta)\| \leq \varepsilon k B_{\tilde{g}}\|\zeta\|$, $\forall\zeta\in\mathcal{B}_2$, according to (Khalil 2002, Lemma 3.3). On the other hand, by analyzing every term involved in $\hat{g}(\zeta)$, one can easily see that $\hat{g}(\zeta)$ is continuously differentiable on $\mathcal{B}_2$. Hence, the Jacobian matrix of $\hat{g}(\zeta)$, $\frac{\partial\hat{g}}{\partial\zeta}$, exists and is continuous on $\mathcal{B}_2$. Moreover, $\forall\zeta\in\mathcal{B}_2$, $\frac{\partial\hat{g}}{\partial\zeta}$ is bounded in view of the compactness of $\mathcal{B}_2$, and consequently $L=\max_{\zeta\in\mathcal{B}_2}\left\|\frac{\partial\hat{g}}{\partial\zeta}\right\|$ exists and is finite. From this and the easily verifiable fact that $\hat{g}(0_6)=0_6$, we have that $\|\hat{g}(\zeta)\| \leq L\|\zeta\|$, $\forall\zeta\in\mathcal{B}_2$, according to (Khalil 2002, Lemma 3.3). Thus, from (42), we have that

$$\|\bar{g}(\zeta)\| \leq \|\tilde{g}(\zeta)\|+\varepsilon\|\hat{g}(\zeta)\| \leq \varepsilon\tilde{B}\|\zeta\| \qquad \forall\zeta\in\mathcal{B}_2 \tag{45}$$

with $\tilde{B} = kB_{\tilde{g}} + L$.

Now, the characteristic polynomial of $A_2$ is given by $|\lambda I_6 - A_2| = (\lambda + k)^2(\lambda + 1)^4$ whence one sees that $A_2$ is Hurwitz. Then, according to (Khalil 2002, Theorem 4.6), there exists a (unique) symmetric positive definite matrix $P_2$ that solves the Lyapunov equation $P_2A_2 + A_2^TP_2 = -I_6$. Consider the positive definite scalar function $V_9(\zeta) = \zeta^TP_2\zeta$. Its derivative along the closed-loop system trajectories is given by

$$\begin{aligned}\dot{V}_9(\zeta) &= \zeta^TP_2[A_2\zeta + \bar{g}(\zeta)] + [A_2\zeta + \bar{g}(\zeta)]^TP_2\zeta \\ &= -\zeta^T\zeta + 2\zeta^TP_2\bar{g}(\zeta) \\ &\leq -\|\zeta\|^2 + 2\lambda_{\max}(P_2)\|\zeta\|\|\bar{g}(\zeta)\| \\ &\leq -\left(1 - 2\varepsilon\tilde{B}\lambda_{\max}(P_2)\right)\|\zeta\|^2\end{aligned}$$

$\forall\zeta \in \mathcal{B}_2$, where (45) has been considered. Then, for a sufficiently small value of $\varepsilon$, such that $\varepsilon < \dfrac{1}{2\tilde{B}\lambda_{\max}(P_2)}$, $\dot{V}_9(\zeta)$ is negative definite on $\mathcal{B}_2$. Moreover, recall that $\mathcal{B}_2$ is compact and positively invariant (see Remark **4**). Observe, on the other hand, that $E \triangleq \{\zeta \in \mathcal{B}_2 : \dot{V}_9(\zeta) = 0\} = \{0_6\}$. Consequently, the largest invariant set contained in $E$ is $E$ itself. Therefore, from LaSalle's invariance principle (see for instance (Khalil 2002, Theorem 4.4)), we conclude that, for any $\zeta(t_8) \in \mathcal{B}_2$, $\zeta(t) \to 0_6$ as $t \to \infty$. Finally, from the precedent parts of the proof and Remark **3**, we conclude that, for any $z(0) \in I\!R^6$, $z(t) \to 0_6$ as $t \to \infty$.

*Conclusion.* Since, according to the proof, the origin is asymptotically stable and, for any $z(0) \in I\!R^6$, $z(t) \to 0_6$ as $t \to \infty$ (which equivalently states that the region of attraction is $I\!R^6$), then according for instance to (Khalil 2002, §4.1), (Sastry 1999, Definition 5.8), (Hahn 1967, §26), (Sepulchre *et al.* 1997, §2.3.1), and (Rouche *et al.* 1977, §2.10–2.11), $0_6$ is a globally asymptotically stable equilibrium for the closed-loop system.

□

**Remark 5 :** Let us note that if $\varepsilon = 0$, in which case $\dot{\theta}_d = \omega_d$ and $\ddot{\theta}_d = \alpha_d$, then the third part proves that, for any $z(t_2) \in I\!R^4 \times \mathcal{S}_0$, $e(t) \to 0_2$ as $t \to \infty$. Further, through the application of La Salle's invariance principle, the fifth part proves that, for any $\zeta(t') \in \mathcal{S}_{12} \times \mathcal{B}_1$, $\zeta(t) \to 0_6$ as $t \to \infty$. Consequently, in the $\varepsilon = 0$ case, the fifth part ends the proof.

**Remark 6 :** From the proof of Proposition 4.1, one sees that the simultaneous satisfaction of

$$k \leq \min\left\{\frac{L_{41}}{B_{\bar{\alpha}_d}}, \frac{L_{42}}{B_{\bar{\omega}_d}}, \frac{L_{43}}{B_{\bar{\omega}_d}}\right\} \tag{46a}$$

$$\varepsilon < \frac{1}{2\tilde{B}\lambda_{\max}(P_2)} \tag{46b}$$

$$\varepsilon k < \min\left\{\frac{L_{21}}{B_{\bar{R}_i}}, \frac{L_{22} - 2M_{21}}{B_{\bar{R}_i}}, \frac{kL_{11}}{B_{\bar{R}_i}}, \frac{k(L_{12} - 2M_{11})}{B_{\bar{R}_i}}, 0.8\right\} \tag{46c}$$

states a sufficient condition to satisfy the small enough requirement for $k$ and $\varepsilon$ that the algorithm imposes for the global stabilization goal to be achieved. These inequalities come respectively from the first, sixth, and fourth parts of the proof of Proposition 4.1. Note however that the worst case character implicitly adopted along the proof renders restrictive such criterion. Small enough values of $k$ and $\varepsilon$ not necessarily satisfying inequalities (46) may be chosen leading however to the globally stabilizing goal.

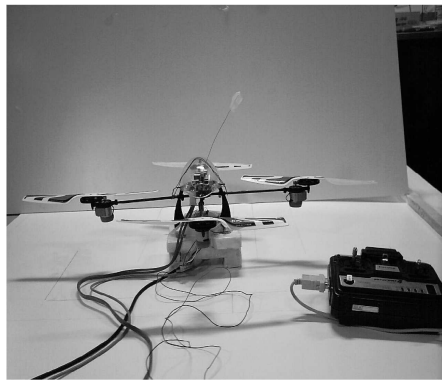

Figure 2. Four-rotor Draganflyer III helicopter

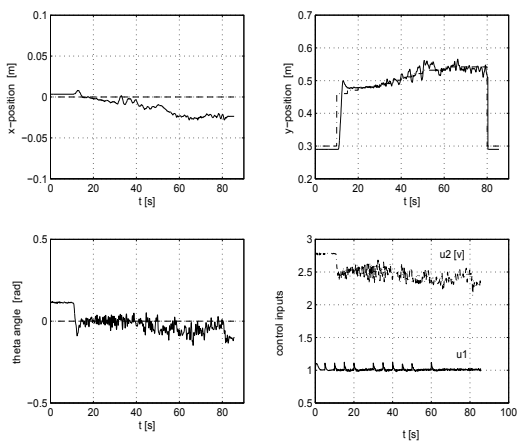


Figure 3. System states and control inputs (— real data, · – · reference)

## 5 Experimental results

Numerical results with several values of $\varepsilon \neq 0$ are presented in (Zavala-Río *et al.* 2003, §4) and (López-Araujo 2008, Chapter 4). The control objective is indeed shown to be achieved avoiding input saturation on each of the cases considered therein. Here, we present some experimental results obtained when the control scheme in (3)–(7) is applied to a real prototype: the four-rotor Draganflyer III helicopter (see Fig. 2). In this device, the front and rear motors rotate counter clockwise while the other two rotate clockwise. When the yaw and roll angles are set to zero, this helicopter reduces to a PVTOL system. We have used a Futaba Skysport 4 radio for transmitting the control signals; these are referred as the *throttle* ($u_1$) and the *pitch* ($u_2$) control inputs. They are constrained in the radio to satisfy $0.66\,\mathrm{V} < u_1 < 4.70\,\mathrm{V}$ and $1.23\,\mathrm{V} < u_2 < 4.16\,\mathrm{V}$. In order to measure the position $(x, y)$ and the orientation $\theta$ of the mini helicopter, we have used a 3D tracker system (POLHEMUS). The computation of the control input requires the knowledge of various angular and linear velocities. We have obtained the angular velocity by means of a gyro Murata ENV-05F-03. Linear velocities were approximated as $\dot{q} = \frac{q_t - q_{t-T}}{T}$ where $T$ is the sampling period ($T = 0.05\,\mathrm{sec}$, in our experiment). The initial conditions and desired configuration were $(x_0, y_0, \theta_0) = (0, 30\,\mathrm{cm}, 0.1\,\mathrm{rad})$ and $(x_d, y_d, \theta_d) = (0, 50\,\mathrm{cm}, 0)$. In order to ease the displacement of the helicopter altitude, small step inputs were gradually added to $y_d$ around the reference value (50 cm) between 10 sec and 80 sec. In Fig. 3, we can see that the altitude $y$ follows the reference. Concerning the position $x$, we observe a small deviation (2 cm) due to, among others, uncertainties and cables connections between the PC and the mini helicopter. The angle $\theta$ converges to zero and the control inputs are bounded. In all figures, we note that the signals are

corrupted by noise due to mechanical gears of motors and propellers. Furthermore, uncertainties in the responses are also caused by the difficulty to adjust gains and couplings existing in the four-rotors helicopter, which have not been taken into account in the analysis. However, the experimental results presented here show that the control strategy works on a real experiment.

## 6 Conclusions

In this work, global stabilization of the PVTOL aircraft with lateral force coupling and bounded inputs has been addressed. The control approach had been developed considering $\varepsilon = 0$. Here, it has been proven that such an algorithm achieves the global stabilization objective even with $\varepsilon \neq 0$, provided that such a value is small enough. A certain degree of robustness of such a control scheme with respect to uncertain (small enough) values of $\varepsilon$ is thus concluded. The proposed methodology takes into account the positive nature of the thrust. The presented analysis was based on the use of embedded saturation functions. The demonstration does not involve any change in the proposed algorithm. Finally, the applicability of the control design methodology has been shown by experimental results on a real mini-helicopter.

## Appendix A:

$\Delta_1$ and $\Delta_2$, respectively in (24) and (25), are given by the following expressions:

$$\Delta_1 = \frac{u_2}{u_1^2}\left[(1+r_2)\Delta_{\dot{\bar{r}}_1} - \bar{r}_1\Delta_{\dot{r}_2}\right] \tag{A1a}$$

where

$$\Delta_{\dot{\bar{r}}_1} = \sigma'_{12}(s_{12})[1+\sigma'_{11}(s_{11})]\cos\theta \tag{A1b}$$

$$\Delta_{\dot{r}_2} = \sigma'_{22}(s_{22})[1+\sigma'_{21}(s_{21})]\sin\theta \tag{A1c}$$

and

$$\Delta_2 = \Delta_{\dot{\bar{\omega}}_d} + \dot{\Delta}_1 \tag{A1d}$$

where

$$\Delta_{\dot{\bar{\omega}}_d} = \frac{u_2}{u_1^2}\left[2\bar{\omega}_d\Delta_{\dot{u}_1} + (1+r_2)\Delta_{\dot{\rho}_1} + \rho_1\Delta_{\dot{r}_2} - \bar{r}_1\Delta_{\dot{\rho}_2} - \rho_2\Delta_{\dot{\bar{r}}_1}\right] \tag{A1e}$$

$$\dot{\Delta}_1 = \frac{u_2}{u_1^2}\left[(1+r_2)\dot{\Delta}_{\dot{\bar{r}}_1} + \dot{r}_2\Delta_{\dot{\bar{r}}_1} - \bar{r}_1\dot{\Delta}_{\dot{r}_2} - \dot{\bar{r}}_1\Delta_{\dot{r}_2}\right] - \frac{2\dot{u}_1}{u_1}\Delta_1 + \frac{\dot{u}_2}{u_1^2}\left[(1+r_2)\Delta_{\dot{\bar{r}}_1} - \bar{r}_1\Delta_{\dot{r}_2}\right] \tag{A1f}$$

with

$$\Delta_{\dot{u}_1} = k^2\bar{r}_1\Delta_{\dot{\bar{r}}_1} + (1+r_2)\Delta_{\dot{r}_2} \tag{A1g}$$

$$\begin{aligned}\Delta_{\dot\rho_1} &= \sigma''_{12}(s_{12})\Big(1+\sigma'_{11}(s_{11})\Big)\Big(-u_1\sin\theta+\sigma'_{11}(s_{11})(k\dot x-u_1\sin\theta)\Big)\cos\theta\\ &\quad+\sigma'_{12}(s_{12})\Big(k\sigma'_{11}(s_{11})+\sigma''_{11}(s_{11})(k\dot x-u_1\sin\theta)\Big)\cos\theta\\ &\quad+\frac{\sigma'_{12}(s_{12})}{u_1}\Big(1+\sigma'_{11}(s_{11})\Big)\Delta_{\dot u_1}\sin\theta\end{aligned}\tag{A1h}$$

$$\begin{aligned}\Delta_{\dot\rho_2} &= \sigma''_{22}(s_{22})\Big(1+\sigma'_{21}(s_{21})\Big)\Big(u_1\cos\theta-1+\sigma'_{21}(s_{21})(\dot y+u_1\cos\theta-1)\Big)\sin\theta\\ &\quad+\sigma'_{22}(s_{22})\Big(\sigma'_{21}(s_{21})+\sigma''_{21}(s_{21})(\dot y+u_1\cos\theta-1)\Big)\sin\theta\\ &\quad-\frac{\sigma'_{22}(s_{22})}{u_1}\Big(1+\sigma'_{21}(s_{21})\Big)\Delta_{\dot u_1}\cos\theta\end{aligned}\tag{A1i}$$

$$\dot{\bar r}_1=\rho_1-\varepsilon u_2\Delta_{\dot{\bar r}_1}\tag{A1j}$$

$$\dot r_2=\rho_2-\varepsilon u_2\Delta_{\dot r_2}\tag{A1k}$$

$$\begin{aligned}\dot\Delta_{\dot{\bar r}_1} &= \sigma''_{12}(s_{12})\dot s_{12}\big(1+\sigma'_{11}(s_{11})\big)\cos\theta+\sigma'_{12}(s_{12})\sigma''_{11}(s_{11})\dot s_{11}\cos\theta\\ &\quad-\sigma'_{12}(s_{12})\big(1+\sigma'_{11}(s_{11})\big)\dot\theta\sin\theta\end{aligned}\tag{A1l}$$

$$\begin{aligned}\dot\Delta_{\dot r_2} &= \sigma''_{22}(s_{22})\dot s_{22}\big(1+\sigma'_{11}(s_{11})\big)\sin\theta+\sigma'_{22}(s_{22})\sigma''_{21}(s_{21})\dot s_{21}\sin\theta\\ &\quad+\sigma'_{22}(s_{22})\big(1+\sigma'_{21}(s_{21})\big)\dot\theta\cos\theta\end{aligned}\tag{A1m}$$

$$\dot u_1=\mu_1-\varepsilon\frac{u_2}{u_1}\Delta_{\dot u_1}\tag{A1n}$$

$$\dot u_2=\dot\alpha_d-2\big[\alpha_d-2(\dot\theta-\omega_d)-(\theta-\theta_d)-\dot\omega_d\big]-(\dot\theta-\dot\theta_d)\tag{A1o}$$

$$\dot\omega_d=\alpha_d-\varepsilon k\Delta_{\dot\omega_d}\tag{A1p}$$

$$\dot\alpha_d=\frac{k}{u_1^2}\Big[\bar r_1\dot\varphi_2+\dot{\bar r}_1\varphi_2-(1+r_2)\dot\varphi_1-\dot r_2\varphi_1\Big]-\frac{2}{u_1}\Big[\dot u_1\alpha_d+\omega_d\Big(\frac{\dot u_1}{u_1}\mu_1+\dot\mu_1\Big)+\mu_1\dot\omega_d\Big]\tag{A1q}$$

$$\dot\mu_1=-\frac{\dot u_1}{u_1}\mu_1+\frac{k^2\bar r_1\dot\rho_1+k^2\dot{\bar r}_1\rho_1+(1+r_2)\dot\rho_2+\dot r_2\rho_2}{u_1}\tag{A1r}$$

$$\dot\rho_1=\varphi_1-\varepsilon u_2\Delta_{\dot\rho_1}\tag{A1s}$$

$$\dot\rho_2=\varphi_2-\varepsilon u_2\Delta_{\dot\rho_2}\tag{A1t}$$

$$
\begin{aligned}
\dot{\varphi}_1 = &- \sigma_{12}'''(s_{12})\dot{s}_{12}\Big( - u_1 \sin\theta + \sigma_{11}'(s_{11})(k\dot{x} - u_1 \sin\theta)\Big)^2 \\
&- 2\sigma_{12}''(s_{12})\Big( - u_1 \sin\theta + \sigma_{11}'(s_{11})(k\dot{x} - u_1 \sin\theta)\Big)\Big( - u_1\dot{\theta}\cos\theta - \dot{u}_1 \sin\theta \\
&\qquad + \sigma_{11}''(s_{11})\dot{s}_{11}(k\dot{x} - u_1 \sin\theta) + \sigma_{11}'(s_{11})(ka_x - u_1\dot{\theta}\cos\theta - \dot{u}_1 \sin\theta)\Big) \\
&- \sigma_{12}''(s_{12})\dot{s}_{12}\Big[ - u_1\dot{\theta}\cos\theta - \mu_1 \sin\theta + \sigma_{11}''(s_{11})(k\dot{x} - u_1 \sin\theta)^2 \\
&\qquad + \sigma_{11}'(s_{11})(-ku_1 \sin\theta - u_1\dot{\theta}\cos\theta - \mu_1 \sin\theta)\Big] \\
&- \sigma_{12}'(s_{12})\Big[ - u_1 u_2 \cos\theta + u_1\dot{\theta}^2 \sin\theta - \dot{u}_1\dot{\theta}\cos\theta - \mu_1\dot{\theta}\cos\theta - \dot{\mu}_1 \sin\theta \\
&\qquad + \sigma_{11}'''(s_{11})\dot{s}_{11}(k\dot{x} - u_1 \sin\theta)^2 \\
&\qquad + 2\sigma_{11}''(s_{11})(k\dot{x} - u_1 \sin\theta)(ka_x - u_1\dot{\theta}\cos\theta - \dot{u}_1 \sin\theta) \\
&\qquad + \sigma_{11}''(s_{11})\dot{s}_{11}(-ku_1 \sin\theta - u_1\dot{\theta}\cos\theta - \mu_1 \sin\theta) \\
&\qquad + \sigma_{11}'(s_{11})\big( - ku_1\dot{\theta}\cos\theta - k\dot{u}_1 \sin\theta - u_1 u_2 \cos\theta + u_1\dot{\theta}^2 \sin\theta \\
&\qquad\qquad - \dot{u}_1\dot{\theta}\cos\theta - \mu_1\dot{\theta}\cos\theta - \dot{\mu}_1 \sin\theta\big)\Big]
\end{aligned}
\tag{A1u}
$$

$$
\begin{aligned}
\dot{\varphi}_2 = &- \sigma_{22}'''(s_{22})\dot{s}_{22}\Big(u_1 \cos\theta - 1 + \sigma_{21}'(s_{21})(\dot{y} + u_1 \cos\theta - 1)\Big)^2 \\
&- 2\sigma_{22}''(s_{22})\Big(u_1 \cos\theta - 1 + \sigma_{21}'(s_{21})(\dot{y} + u_1 \cos\theta - 1)\Big)\Big( - u_1\dot{\theta}\sin\theta + \dot{u}_1 \cos\theta \\
&\qquad + \sigma_{21}''(s_{21})\dot{s}_{21}(\dot{y} + u_1 \cos\theta - 1) + \sigma_{21}'(s_{21})(a_y - u_1\dot{\theta}\sin\theta + \dot{u}_1 \cos\theta)\Big) \\
&- \sigma_{22}''(s_{22})\dot{s}_{22}\Big[ - u_1\dot{\theta}\sin\theta + \mu_1 \cos\theta + \sigma_{21}''(s_{21})(\dot{y} + u_1 \cos\theta - 1)^2 \\
&\qquad + \sigma_{21}'(s_{21})(u_1 \cos\theta - 1 - u_1\dot{\theta}\sin\theta + \mu_1 \cos\theta)\Big] \\
&- \sigma_{22}'(s_{22})\Big[ - u_1 u_2 \sin\theta - u_1\dot{\theta}^2 \cos\theta - \dot{u}_1\dot{\theta}\sin\theta - \mu_1\dot{\theta}\sin\theta + \dot{\mu}_1 \cos\theta \\
&\qquad + \sigma_{21}'''(s_{21})\dot{s}_{21}(\dot{y} + u_1 \cos\theta - 1)^2 \\
&\qquad + 2\sigma_{21}''(s_{21})(\dot{y} + u_1 \cos\theta - 1)(a_y - u_1\dot{\theta}\sin\theta + \dot{u}_1 \cos\theta) \\
&\qquad + \sigma_{21}''(s_{21})\dot{s}_{21}(u_1 \cos\theta - 1 - u_1\dot{\theta}\sin\theta + \mu_1 \cos\theta) \\
&\qquad + \sigma_{21}'(s_{21})\big( - u_1\dot{\theta}\sin\theta + \dot{u}_1 \cos\theta - u_1 u_2 \sin\theta - u_1\dot{\theta}^2 \cos\theta \\
&\qquad\qquad - \dot{u}_1\dot{\theta}\sin\theta - \mu_1\dot{\theta}\sin\theta + \dot{\mu}_1 \cos\theta\big)\Big]
\end{aligned}
\tag{A1v}
$$

and

$$
\dot{s}_{12} = a_x + \sigma_{11}'(s_{11})\dot{s}_{11} \quad , \quad \dot{s}_{11} = k\dot{x} + a_x \quad , \quad a_x = -u_1 \sin\theta + \varepsilon u_2 \cos\theta \tag{A1w}
$$

$$
\dot{s}_{22} = a_y + \sigma_{21}'(s_{21})\dot{s}_{21} \quad , \quad \dot{s}_{21} = \dot{y} + a_y \quad , \quad a_y = u_1 \cos\theta + \varepsilon u_2 \sin\theta - 1 \tag{A1x}
$$

**References**

Apostol, T.M. (1974), *Mathematical Analysis* (2nd edn), Reading, MA: Addison-Wesley.

Chemori, A., and Marchand, N. (2008), 'A prediction-based nonlinear controller for stabilization of a non-minimum phase PVTOL aircraft', *Int. J. of Robust and Nonlinear Cont.* 18, 876–889.

Consolini, L., and Tosques, M. (2007), 'On the VTOL exact tracking with bounded internal dynamics via a Poincaré map approach', *IEEE Trans. on Automatic Control* 52, 1757–1762.

Do, K.D., Jiang, Z.P., and Pan, J. (2003), 'On global tracking control of a VTOL aircraft without velocity measurements', *IEEE Transactions on Automatic Control*, 48, 2212–2217.

Hahn, W. (1967), *Stabiliy of Motion*, Berlin: Springer-Verlag.

Hauser, J., Sastry, S., and Meyer, G. (1992), 'Nonlinear control design for slightly nonminimum phase systems: Application to V/STOL aircraft', *Automatica*, 28, 665–679.

Khalil, H.K. (2002), *Non-Linear Systems* (3rd edn), Upper Saddle River, NJ: Prentice Hall.

Lin, F., Zhang, W., and Brandt, R.D. (1999), 'Robust hovering control of a PVTOL aircraft', *IEEE Transactions on Control Systems Technology*, 7, 343–351.

López-Araujo, D.J. (2008), *Global stabilization of the PVTOL aircraft with lateral coupling and bounded inputs.* MSc dissertation, IPICyT, División de Matemáticas Aplicadas. Available at http://www.ipicyt.edu.mx/Divisiones/Matematicas/PosgradoMatematicas/Tesis.htm

Lozano, R., Castillo, P., and Dzul, A. (2004), 'Global stabilization of the PVTOL: real-time application to a mini-aircraft', *International Journal of Control* 77, 735–740.

Marconi, L., Isidori, A., and Serrani, A. (2002), 'Autonomous vertical landing on an oscillating platform: an internal-model based approach' *Automatica*, 38, 21–32.

Martin, P., Devasia, S., and Paden, B. (1996), 'A different look at output tracking: Control of a VTOL aircraft', *Automatica*, 32, 101–107.

Nielsen, C., Consolini, L., Maggiore, M., and Tosques, M. (2008), 'Path following for the PVTOL: a set stabilization approach', in *Proc. of the 47$^{th}$ IEEE Conf. on Dec. and Cont.*, pp. 584–589.

Olfati-Saber, R. (2002), 'Global configuration stabilization for the VTOL aircraft with strong input coupling', *IEEE Transactions on Automatic Control*, 47, 1949–1952.

Palomino, A., Castillo, P., Fantoni, I., Lozano, R., and Pégard, C. (2003), 'Control strategy using vision for the stabilization of an experimental PVTOL aircraft setup', in *Proceedings of the 42$^{th}$ IEEE Conference on Decision and Control*, pp. 4487–4492.

Rouche, N., Habets, P., and Laloy, M. (1977), *Stability Theory by Liapunov's Direct Method*, Ney York: Springer-Verlag.

Saeki, M., and Sakaue, Y. (2001), 'Flight control design for a nonlinear non-minimum phase VTOL aircraft via two-step linearization', in *Proceedings of the 40$^{th}$ IEEE Conference on Decision and Control*, pp. 217–222.

Sánchez, A., Fantoni, I., Lozano, R., and de León Morales, J. (2004), 'Nonlinear estimation of the PVTOL aircraft attitude', in *Proceedings of the 2nd IFAC Symposium on Systems, Structure, and Control*, pp. 567–572.

Sastry, S. (1999), *Nonlinear Systems: Analysis, Stability, and Control*, New York: Springer-Verlag.

Sepulchre, R., Janković, M., and Kokotović, P. (1997), *Constructive Nonlinear Control.* London: Springer-Verlag.

Setlur, P., Fang, Y., Dawson, D., and Costic, B. (2001) 'Nonlinear tracking control of the VTOL aircraft', in *Proceedings of the 40$^{th}$ IEEE Conference on Decision and Control*, pp. 4592–4597.

Teel, A.R. (1992), 'Global stabilization and restricted tracking for multiple integrators with bounded controls', *Systems & Control Letters*, 18, 165–171.

Teel, A.R. (1996), 'A nonlinear small gain theorem for the analysis of control systems with

saturation', *IEEE Transactions on Automatic Control*, 41, 1256–1270.

Wood, R., and Cazzolato, B. (2007), 'An alternative nonlinear control law for the global stabilization of the PVTOL vehicle', *IEEE Transactions on Automatic Control*, 52, 1282–1287.

Ye, H., Wang, H., and Wang, H. (2007), 'Stabilization of a PVTOL aircraft and a inertia wheel pendulum using saturation techinque', *IEEE Transactions on Control Systems Technology*, 15, 1143–1150.

Zavala-Río, A., Fantoni, I., and Lozano, R. (2003), 'Global stabilization of a PVTOL aircraft model with bounded inputs', *International Journal of Control*, 76, 1833–1844.