HAL open science

Heterogeneous Batch Extractive Distillation of Minimum Boiling Azeotropic Mixtures

Ivonne Rodriguez-Donis, Jhoanny Acosta-Esquijarosa, Vincent Gerbaud, Xavier Joulia

To cite this version:

Ivonne Rodriguez-Donis, Jhoanny Acosta-Esquijarosa, Vincent Gerbaud, Xavier Joulia. Heterogeneous Batch Extractive Distillation of Minimum Boiling Azeotropic Mixtures. AIChE Journal, 2003, 49 (12), pp.3074-3083. 10.1002/aic.690491209 . hal-00467480

HAL Id: hal-00467480

https://hal.science/hal-00467480v1

Submitted on 17 Oct 2023

HAL is a multi-disciplinary open access archive for the deposit and dissemination of scientific research documents, whether they are published or not. The documents may come from teaching and research institutions in France or abroad, or from public or private research centers.

L'archive ouverte pluridisciplinaire **HAL**, est destinée au dépôt et à la diffusion de documents scientifiques de niveau recherche, publiés ou non, émanant des établissements d'enseignement et de recherche français ou étrangers, des laboratoires publics ou privés.

The original publication is available at ww3.interscience.wiley.com
http://dx.doi.org/10.1002/aic.690491209

HETEROGENEOUS BATCH EXTRACTIVE DISTILLATION OF MINIMUM BOILING AZEOTROPIC MIXTURES.

RODRÍGUEZ DONIS Ivonne [1,2], ACOSTA ESQUIJAROSA Jhoany[1], GERBAUD Vincent [2]* and JOULIA Xavier [2]

[1] Centro de Química Farmacéutica, 200 y 21 Atabey. Apdo. 16042, Playa, C. Habana, CUBA

2 Laboratoire de Génie Chimique UMR CNRS 5503, ENSIACET – UPS – CNRS,

BP1301, 5 rue Paulin Talabot, 31106 Toulouse Cedex 1, France

* Corresponding author. Email: Vincent.Gerbaud@ensiacet.fr

ACCEPTED FOR PUBLICATION IN AIChE Journal, 49(12), 3074-3083, 2003

Abstract

Following previous studies on heterogeneous batch azeotropic distillation, we evaluate the use of heterogeneous entrainers for the separation of binary azeotropic mixtures by extractive distillation. This process is well suited for systems where the entrainer forms a saddle heteregeneous azeotrope with anyone of the original components, such systems being unsuitable for non extractive heterogeneous batch distillation processes. Process feasibility is assessed from the isovolatility curves and the volatility order diagram. It tells us whether the homogeneous original component or the heteroazeotrope is drawn at the column top and establishes the distillation tasks sequence using a batch rectifying column. The theoretical insights are validated via rigourous simulation for the separation of the mixture acetonitrile – water with hexylamine or butyl acetate. Finally, the same method is applied for the theoretical analysis of a reported industrial example where water is used for the separation of binary organic mixture leading to a complex ternary system with several binary azeotropic points and a homogenous ternary azeotrope.

Topical Heading

Separation

Keywords

batch distillation, extractive distillation, heterogeneous entrainer.

INTRODUCTION

Separating azeotropic mixtures or low relative volatility compounds in high purity products is a task commonly encountered in the chemical industry. However, it cannot be performed using a conventional distillation process. When pressure swing distillation is not economically appropriate, one often adds a selective entrainer to the original mixture. Such entrainers take advantage of non-ideality of a mixture involving components with different chemical structures. Indeed, technical and economical performance of extractive and azeotropic distillation relies on the effect of such entrainers. Entrainer selection for extractive distillation is tricky because many factors must be considered such as the selectivity, solubility, boiling point, thermal stability, corrosion, toxicity, prices and other chemical properties. Among these, selectivity and solubility are the primary factors because they enable to alter in a convenient manner the relative volatility and the solubility of the original components in the entrainer. Because distillation is practically difficult or impossible when the relative volatility value nears unity (unity means that there is an azeotrope), the selectivity of an entrainer is defined by its ability to move away from unity the relative volatility between the original components A and B which is defined according to equation (1):

$$\alpha_{A.B} = \frac{\frac{y_A}{x_A}}{\frac{y_B}{x_B}} = \left(\frac{P_A^o}{P_B^o}\right) \cdot \left(\frac{\gamma_A}{\gamma_B}\right) \qquad (1)$$

Where, component A and B are the low and high boiling temperature original component, respectively. The calculation of entrainers selectivity requires either liquid and vapor equilibrium compositions or activity coefficients at a given entrainer concentration. Preliminary estimations of these variables can be obtained by simple experimental methods or using suitable thermodynamic models. Indeed, phase equilibrium can be predicted using activity coefficient models or equation of state with binary interaction parameters regressed from binary or ternary equilibrium data or using group contribution approaches (Prausnitz et al., 1986; Fredenslund et al., 1975).

The effect of the entrainer on the relative volatility depends on interactions between entrainer and each original component in the liquid phase: molecules of different type repel or attract each other to some extent that depends on many factors (molecule size and conformation, charge distribution, intermolecular distance, hydrogen bonding formation, etc…). The natural relative volatility value $\alpha_{A,B}$ will be moved away from unity if the entrainer interacts strongly with the low boiling temperature component A and weakly with the high boiling temperature component B. In fact, the entrainer should show a positive deviation from Raoult's Law with component A without azeotrope formation and no or slight deviation with component B. Such an entrainer allows the separation of component A as distillate whereas component B is retained into the still along with the entrainer. The opposite case is obtained if the entrainer is not chemically similar to the component B. The first criterion has been largely used to choose homogeneous entrainers for the separation of minimum boiling azeotrope. A suitable entrainer is usually a high boiling component that forms non-azeotropic mixture with the components to be separated. Extractive distillation with entrainers of this kind has been performed successfully in industrial columns (Perry et al., 1997).

Unfortunately, looking for homogeneous entrainer with such properties is not an easy task: entrainers with high selectivity have shown a limited miscibility with at least one of original components (Lee and Gentry, 1997; Lee, 1998) and are then qualified as heterogeneous entrainers. This is a logical result because the dissimilar chemical structure between the entrainer and the component A or B can commonly produces the formation of an azeotropic mixture and/or the

apparition of a partial miscibility region among them. Then, the resulting ternary residue curve map doesn't provide a feasible scheme for the separation of the original mixture by a classical extractive distillation process. In this case, another auxiliary component called "cosolvent" must be blended with the entrainer to improve the miscibility in the resulting mixture without affecting its selectivity. This fact complicates the design of a new process.

In this article, we show that the presence of a heterogeneous azeotrope in the ternary system A-B-E is not a significant constraint for the selection of a suitable heterogeneous entrainer E. In the first part, we present the mechanism by which heterogeneous entrainers make the separation feasible from the analysis of the thermodynamic description of the ternary system. Knowing this information, we can establish the preliminary flowsheet of the heterogeneous batch extractive distillation process. Without intending to list exhaustively all feasible diagrams, we first illustrate the feasibility of the process with the separation of an acetonitrile – water mixture with hexylamine or butyl acetate as heterogeneous entrainers. The corresponding [120] ternary system (Matsuyama and Nishimura, 1977) exhibits the simplest structure involving only two binary azeotropic points. Later, we analyze an industrial example where water is used as feasible heterogeneous entrainer, which adds several binary azeotropic points and a homogenous ternary azeotrope to the resulting [222-m] ternary mixture. Many ternary systems involving a partial miscibility between two components (type I dual liquid region diagrams) and corresponding to the thermodynamic and topological properties of the diagrams we investigate have been reported (Gmehling et al., 1994). As we will explain below, the separation of the primary components by published batch processes would either require a complicated sequence of batch distillation steps or even be not feasible by heterogeneous azeotropic distillation. Therefore, heterogeneous batch extractive distillation process is an attractive alternative to be considered for the separation of these classes of ternary mixtures.

Theoretical insights established for the operation of heterogeneous extractive batch distillation are validated via simulations using the batch process simulator ProSim Batch (ProSim S.A, 1991). The column model consists of usual plate by plate MESH equations (Material balance, Equilibrium,

Summation of molar fractions and Heat balance) which are solved for the whole column, decanter included and taking into account the liquid-liquid demixion. Numerical treatment of the Differential Algebraic Equation (DAE) system and discrete events handling is performed with DISCo, a numerical package for hybrid systems with a DAE solver based on Gear's method (Sargousse et al., 1999). Isovolatility curves are computed in an excel spreadsheet with BibPhyAddIn (ProSim S.A, 1991).

SCREENING OF HETEROGENEOUS ENTRAINERS FOR EXTRACTIVE BATCH DISTILLATION

Several methods are available to determine which original component will be drawn as distillate at the batch distillation column top and the minimum amount of entrainer to separate both components with the specified purity. The most recent method involves the determination of isovolatility curves $\alpha_{i,j} = 1$ (Laroche et al, 1992) that divide the ternary diagram in different regions in which the components volatility decreasing order can be defined. Plotted on the residue curve map, the isovolatility curves gives the primary and essential information for the synthesis of extractive distillation processes**:** which component will be drawn as distillate, the entrainer supply for a feasible separation and the number of continuous distillation columns or batch distillation tasks required for the separation of the original components and the entrainer recovery.

Laroche et al. (1992) addressed the screening of homogeneous entrainers for the separation of minimum boiling azeotropic mixture with a light, intermediate or heavy boiling entrainer by continuous extractive distillation. In all their cases, the entrainer forms no azeotrope with the original components. We apply this methodology to the separation of homogeneous minimum boiling temperature azeotropes by batch extractive distillation with heterogeneous entrainers which forms a binary heterogeneous azeotrope between the entrainer and one of the original components. The entrainer is a high boiling temperature component and the heterogeneous azeotrope has an

intermediate boiling temperature in the resulting ternary mixture. In contrast, the feasibility of a process involving a low boiling temperature or an intermediate boiling temperature entrainer is not addressed in this study. It will depend on the thermodynamics properties of each particular case: the ternary system should involve an unstable homogeneous ternary azeotrope which imposes the stability of binary azeotropes as saddles. This particularity also occurs with high boiling temperature entrainers and will be illustrated in the last part of this paper .

Unlike in heterogeneous azeotropic batch distillation where the unstable binary heteroazeotrope is obtained in the vapor overhead (Modla et al, 2001; Rodriguez-Donis et al., 2002), in heterogeneous extractive distillation, either the saddle miscible primary component (case 1) or the saddle binary heteroazeotrope (case 2) can be obtained in the vapor overhead of the rectifying column thanks to the feed of the heterogeneous entrainer at some tray near the column top. For case 1, the process works in a way similar to homogeneous batch extractive distillation. For case 2, significant operation differences discussed below arise compared to the classic process Notice that our study is limited to the separation of minimum boiling binary azeotropic mixture, but a heterogeneous entrainer can also be used for the separation of binary mixtures with a low relative volatility and of maximum boiling binary azeotropic mixtures.

At first, we consider the simplest feasible ternary diagram which has two binary azeotropes: the homogeneous minimum boiling azeotrope AB to be separated and the heteroazeotrope between the entrainer E and either A or B. The resulting ternary diagram is divided by one unstable separatrix and both primary components are located in different distillation regions (see figure 1). The only unstable node is the original homogeneous azeotrope and the separation of the original components is not possible by heterogeneous azeotropic distillation considering a rectifying column (Modla et al., 2001 and Rodriguez-Donis et al., 2001). The entrainer vertex and the immiscible original component are the stable nodes in the ternary system. The separation of the immiscible original component is possible by heterogeneous azeotropic distillation using an inverted column as a first operating step where the entrainer is added along with the binary mixture in the reflux drum. This

first step is over when the reflux drum trajectory reaches the unstable separatrix inside the heterogeneous envelope providing a liquid phase that belongs to another distillation region. Then, the separation of the miscible original component is possible using two additional batch distillation steps considering a rectifying or a stripping column. More details about the feasibility of the separation of minimum boiling azeotropic mixtures for similar ternary diagrams using this complex column sequence is reported in Rodriguez-Donis et al. (2001). This rather complicated three non extractive batch tasks sequence makes the ternary system a suitable candidate to examine the feasibility of batch extractive heterogeneous distillation where the heterogeneous entrainer is added in some tray near of the column top. Discriminating between process alternatives would require a more complete comparison taking into account economical criteria as well as operating conditions and column availability.

An entrainer can lead to a ternary diagram with a heterogeneous region where the heteroazeotrope is a saddle if it exhibits the following thermodynamic behavior:

1) The entrainer induces a strong positive deviation of Raoult's Law with one original component (leading to the formation of a minimum boiling binary heterogeneous azeotrope).
2) The entrainer forms an ideal binary mixture or it shows a negative deviation of Raoult's Law without any azeotrope formation with the other key component.

If condition (1) holds for component A and condition (2) for component B then, the natural relative volatility is increased due to the addition of the heterogeneous entrainer. In the contrary case, the entrainer reduces the value of $\alpha_{A,B}$. In the first case, condition (1) could occur if the entrainer has an important polarity difference with the component A and their boiling temperature are close whereas condition (2) can be satisfied under two criteria:

- The entrainer is selected from the same homologous chemical series than component B.

- The entrainer is chemically dissimilar to component B but they have a high boiling temperature difference in order to avoid the formation of an azeotrope between them.

For the separation of aqueous – organic binary mixtures, many feasible entrainers could be found among those inducing a liquid – liquid phase split with water. For the separation of organic mixtures, water would often be a promising entrainer candidate.

The analysis of the feasibility of extractive distillation requires the knowledge of the heterogeneous residue curve map and the calculation of isovolatility curve for each binary mixture included in the ternary system. We analyze the feasibility of heterogeneous extractive distillation process in a batch column considering the separation of acetonitrile – water mixture, which is a widely encountered waste stream in the separation of bioactive substances by liquid chromatography processes. Acetonitrile – water exhibits a minimum boiling azeotrope with a molar fraction of acetonitrile near 0.7 at 76.5°C under atmospheric pressure.

Because of the non-ideal behavior occurring between water and many chemical compounds that often results in the formation of a heterogeneous azeotrope, it is not straightforward to find an entrainer which allows the separation of the miscible component (e.g. acetonitrile) as distillate. Therefore, one is looking for entrainers preferably selective for water so as to decrease the natural volatility between both original components.

SEPARATION OF ACETONITRILE – WATER BY HETEROGENEOUS EXTRACTIVE DISTILLATION IN A BATCH RECTIFYING COLUMN.

Choice of a suitable entrainer for the separation of acetonitrile – water by heterogeneous extractive distillation.

Table 1 shows the activity coefficients at infinite dilution of acetonitrile and water in each other estimated by the NRTL model with the binary coefficients reported by Gmehling and Onken (1982) in the DECHEMA tables. Table 1 also displays the activity coefficients at infinite dilution of the

two key components in several entrainers as predicted by the UNIFAC activity coefficient method. First, entrainers that belong to the same homologous series as acetonitrile are considered. Then, other entrainers are looked at in decreasing order of polarity as follows: amines > alcohols > esters > ketones > aromatics. Paraffins are disregarded because of the existence of some partial miscibility with acetonitrile that would lead to two immiscibility regions.

The results obtained in Table 1 matches with the general feasible entrainer features described above. The use of high boiling temperature components of the same homologous series as acetonitrile strongly decreases the natural relative volatility of the mixture to be separated. On the other hand, the addition of an entrainer with a different chemical structure changes the natural relative volatility depending on its polarity and the molecular interaction with each primary component. In fact, as seen by a value of $\gamma_1^\infty/\gamma_2^\infty > 1$, only hexylamine and heptylamine keep the acetonitrile as the most volatile component, which can be obtained as distillate like in a conventional homogeneous extractive distillation. The addition of other heterogeneous entrainers has a similar effect than the one obtained for the components belonging to the acetonitrile's chemical family. We study below in more details the synthesis of heterogeneous batch extractive distillation for the two opposite alternatives considering first the hexylamine as a representative of an increase of the natural acetonitrile – water relative volatility and then, we analyze the use of butyl acetate as a representative of a decrease of the acetonitrile – water relative volatility. The key difference between the two cases is given by the fact that the isovolatility curve arrives at the homogeneous binary side [low boiling original component – entrainer] for the hexylamine case and at the heterogeneous binary side [high boiling original component – entrainer] for the butyl acetate case. Therefore, the low boiling original component will be obtained in the vapor overhead for the hexylamine case but it will be the heteroazeotrope for the butyl acetate case. Table 1 shows also the value of x_P, which depends on the mixture thermodynamics because it is the intersection point of the isovolatility curve on the binary side limited by the entrainer and one of the original components. Therefore, the influence of the entrainer on the $\gamma_1^\infty/\gamma_2^\infty$ ratio and on the x_P value is

mainly determined by the molecular interaction between the key components and the selected entrainer. We have found that the obtained x_P values for heterogeneous entrainers are lower than those reported in previous works for homogeneous entrainers (Laroche et al, 1992; Lelkes et al, 1998). In general, homogeneous entrainers that provide a relative volatility value near to unity give a low x_P value. This is observed for the hexylamine and heptylamine entrainers despite the fact that the isovolatility curve reaches the binary side that contains no azeotropic point (case 1). However, for the heterogeneous entrainers, which can reverse greatly the normal relative volatility of the original components (case 2), all calculated x_P values in Table 1 are smaller than those normally reported for homogeneous systems. It seems that the presence of the binary heteroazeotrope on the binary side reached by the isovolatility curve affects the value of x_P because this point is always located between the heteroazeotrope and the high boiling temperature entrainer vertex. This particularity is not present in homogeneous system where the isovolatility curve always arrives to the zeotropic binary side. Furthermore, Laroche et al. (1992) demonstrated via simulation for several ternary mixtures that the x_P value has an important influence on the performance of an extractive distillation process. In general, a greater fraction of the original component in x_P gives some evidences that the separation of the primary mixture is possible using a lower amount of the entrainer and minimum reflux ratio. All these features will be illustrated in more details in the examples presented in the next sections.

Separation of acetonitrile – water with hexylamine.

Figure 2 displays the ternary diagram for acetonitrile (A) – water (B) – hexylamine (E) with the isovolatility curves and the local volatility order of the three components in each sub region of the triangle. The isovolatility curves and the ternary liquid – liquid – vapor equilibrium envelope were calculated using the UNIFAC model. The possibility of the application of extractive distillation process to perform the separation of the original components is given by the analyses of the isovolatility curves in the ternary diagram $\alpha_{A,B}$, $\alpha_{A,E}$ and $\alpha_{B,E}$. In fact, the simplex is divided into

three regions by the curves $\alpha_{A,B} = 1$ and $\alpha_{B,E} = 1$ whereas the acetonitrile is always more volatile than hexylamine ($\alpha_{A,E} > 1$). The curve $\alpha_{A,B} = 1$ divides the triangle in two regions I and II. In region I, water is the most volatile component whereas in region II, it is acetonitrile. In both regions hexylamine is the high boiling component. Furthermore, the existence of the curve $\alpha_{B,E} = 1$ adds region III where water is the high boiling component. The fact that the curve $\alpha_{A,B} = 1$ reaches the binary side acetonitrile – hexylamine tells us that, like in homogeneous batch distillation, acetonitrile will be drawn as distillate if the hexylamine is fed continuously in a tray near the column top. The minimum entrainer flowrate F_{min} is related to the position of the intersection point x_P of the curve $\alpha_{A,B} = 1$ on the binary side acetonitrile – hexylamine. Taking into account this preliminary thermodynamic information the synthesis of the heterogeneous extractive distillation can be established considering the methodology first devised by Yatim et al. (1993), Lang et al. (1994) and Lelkes et al. (1998) for a batch extractive homogeneous rectifying column. The only difference with the homogeneous entrainer process is the immiscibility gap defined by the presence of the binary heteroazeotrope.

Figure 2 shows the sequence of the batch distillation steps needed to achieve the separation of the ternary mixture by heterogeneous extractive distillation in a batch rectifying column. The separation of all components occurs in a similar way that those reported for homogeneous extractive distillation in the same configuration column (Lelkes et al, 1998):

step 1. After the still is charged with the acetonitrile - water mixture, the column is operated at infinite reflux until the unstable homoazeotrope reaches the column top.

step 2. Under infinite reflux operation, some entrainer is introduced continuously in a tray placed in somewhere near at the top of the column with a flowrate $F > F_{min}$. This operating condition determines the necessary and sufficient statement to make the process feasible, namely connecting the extractive liquid profile at any still composition with the one existing in the rectifying section at the extractive stable node

S_n. Feeding the entrainer at infinite reflux produces the apparition of S_n, which is reached by all extractive profiles and is also situated on the rectifying liquid profile given by a residue curve containing the specified distillate composition for the acetonitrile. This infinite reflux step is over when the homoazeotrope is replaced overhead by acetonitrile with a purity depending on the number of trays in the rectifying column section. Because acetonitrile is a saddle in the ternary system, for a given number of trays in the extractive section, there exist a maximum number of trays in the rectifying section that sets the highest reachable purity of this component in the distillate product. In the extractive section, an infinite number of trays provides the greatest concentration of acetonitrile in the distillate. However, this is impracticable in a real column and a sharp separation between the original components is scarcely obtained by extractive distillation.

step 3. the entrainer is still continuously fed but a finite reflux ratio is set and high purity acetonitrile is drawn as a distillate product. The use of a finite reflux ratio gives usually rise to the apparition of unfeasible regions. Therefore, the still path will not be able to reach the binary side water – hexylamine and the recovery of acetonitrile is less than 100% (Lelkes et al., 1998). Hence, an intermediate cut is normally drawn from the column.

step 4. Finally, one proceeds the separation of the entrainer and of the heavy primary component remaining in the column. Then, the overhead vapor composition equals the heteroazeotropic one, allowing the separation of a water-rich phase as distillate while a hexylamine-rich phase is refluxed to the column and remains at the end of the process in both the decanter and the still.

The column operating conditions are reported in Table 2. The liquid vapor equilibrium is estimated using the UNIFAC model. The simulation results of step 2 are showed in Figure 3: thanks to the feeding of hexylamine on the 5th tray from the top, the liquid composition in the reflux drum moves

from the homogeneous acetonitrile – water azeotropic mixture towards the acetonitrile vertex. The feasibility is ensured because the extractive and the rectifying liquid profiles intersect at the final molar composition on the entrainer feed tray the distillate acetonitrile fraction equals 0.973. This demonstrates that similarly to homogeneous extractive continuous distillation, the light original component A can be obtained as distillate when the isovolatility curve $\alpha_{A,B} = 1$ reaches the binary side A-E according to the method developed by Laroche et al. (1992). In the contrary case, when the isovolatility curve $\alpha_{A,B} = 1$ reaches the heterogeneous binary side, the heteroazeotrope is drawn as top product as we will explain later. The main drawback of this process is the prohibitive consumption of heterogeneous entrainer because of the small value of x_P, the composition of acetonitrile on the binary side acetonitrile (A) – hexylamine (E). The composition of the entrainer feed tray x_E which links the liquid profile in both column sections has to be placed between the hexylamine vertex and x_P. For that reason, a large amount of heterogeneous entrainer has to be added to the column to obtain an extractive liquid profile joining the final still composition x_S with the rectifying liquid profile passing through the desired distillate composition. The low value of x_P restricts the feasible region to a zone of high hexylamine content. This problem could be overcome using a middle vessel column where the heterogeneous entrainer would be obtained as a bottom product and recycled to the feed tray above the middle vessel. In this case, water would remain with the hexylamine in the middle vessel at the end of the process and this binary mixture could be separated in a further batch distillation task where the binary heteroazeotrope would be drawn as vapor overhead and separated in a water-rich phase which purity will be set by the liquid – liquid split at the decanter temperature.

Separation of acetonitrile – water with butyl acetate.

Figure 4 shows the isovolatility curve and the local volatility order between the three components for butyl acetate as heterogeneous entrainer. The ternary liquid – liquid – vapor equilibrium was predicted by using NRTL binary interaction coefficients estimated from recent experimental data of the ternary liquid - liquid – vapor mixture at atmospheric pressure reported by Acosta-Esquijarosa

et al. (2002). In this case, the ternary system involves all three isovolatility curves, defining four regions. In region I, water is the most volatile component whereas it is acetonitrile in regions II and III and butyl acetate in the little region IV. Whatever the region, the heteroazeotrope can be drawn as vapor overhead at the column top because the curve $\alpha_{A,B}=1$ reaches the heterogeneous binary side water – butyl acetate. For the heterogeneous batch extractive process, the entrainer flowrate has to be higher than a minimum value defined by the position of x_P on the segment limited by the heteroazeotrope composition and the butyl acetate vertex.

Similarly to the hexylamine case, a feasible sequence of batch rectifier tasks shows in figure 4 can be defined to provide the separation of all components by heterogeneous extractive distillation. Step 1 is identical to the previous hexylamine case. In step 2 the heteroazeotrope takes the place of the unstable homoazeotrope thanks to the addition of butyl acetate at the top of the column under infinite reflux operation. This leads to a liquid – liquid phase split in the sub cooled decanter and the water-rich phase can be drawn as distillate during the step 3 while the entrainer-rich phase is continuously refluxed to the column under a finite reflux ratio. After water is exhausted from the batch column, the separation of the binary mixture acetonitrile – butyl acetate remaining in the still and in the column can be performed as a conventional batch distillation process.

To validate the relevant differences introduced by the use of the heterogeneous entrainer with the well known homogeneous extractive batch distillation, the task sequence described in Figure 4 is validated through simulation. The liquid – liquid equilibrium in the decanter is estimated using binary coefficients values reported in the DECHEMA tables for the liquid – liquid equilibrium of the ternary mixture at 31°C (Sorensen and Arlt, 1979).

The process simulation proceeds as follow: initially, the azeotropic mixture is charged into the still and the column is operated at infinite reflux. The homogeneous acetonitrile – water azeotrope is obtained in the overhead vapor. When step 2 begins, pure butyl acetate is fed on the first tray of the column top with a significant flowrate reported in Table 3. Simulation results of the step 2 and 3 are showed in Figure 5: the addition of butyl acetate at the column top produces the replacement of

homogenous original azeotropic mixture in the decanter by the heteroazeotrope while the still path moves from its initial composition (acetonitrile – water azeotrope) towards the butyl acetate vertex. At the end of step 2, the liquid profile in the extractive section links the punctual still composition x_S with the stable node S_n located on the binary side water – butyl acetate. Besides, S_n lies on the same VLL tie line as the heteroazeotrope, giving a top vapor composition equals to the heteroazeotrope one. The condensed vapor leads to a liquid – liquid split into the decanter and the water-rich phase can be recovered as distillate in the subsequent operating step. It should be noted that unlike homogeneous extractive batch distillation and because of the specific properties of VLL tie line overall liquid compositions that are in equilibrium with a unique vapor composition, the process is feasible without a rectifying section and the entrainer can be directly fed to the first tray in the column top. In homogeneous batch extractive distillation, a rectifying section would be needed to ensure that the overhead vapor composition is near the light original component. During step 3, the same entrainer flowrate as in step 2 is kept and one first sets that 90% of the overall condensed vapor is refluxed at the top of the column whereas the acetonitrile composition in the top first tray is lower than 0.005. When this latter condition is no longer accomplished, step 3 is continued considering that 95% of condensed vapor is refluxed to the column top (this indeed increases the reflux and keeps the acetonitrile fraction on the first tray below 0.005, enabling to get the heteroazeotrope overhead). In both cases the remaining condensed vapor phase is sent to the decanter. Besides, an extra amount of entrainer-rich phase is also refluxed from the decanter and this amount is controlled by a fixed level of the organic phase into the decanter. This reflux policy assured that the heteroazeotrope is drawn during the whole process. The resulting reflux ratio during step 3 is showed in Table 3. Its value is large but enables to obtain a molar purity of the aqueous distillate higher than 0.99. To maintain this purity with a lower reflux ratio would require a higher pure entrainer flowrate. Figure 5 shows that the still path during step 3 arrives at the binary side acetonitrile – butyl acetate because water is removed as distillate (average molar purity of

0.9957). In the last operational step of the process, the remaining binary mixture acetonitrile and butyl acetate can be separated by conventional batch distillation.

Table 3 shows more simulation results such as the duration of step 2 and 3, the purity of the entrainer-rich phase into the decanter, the liquid holdup and the composition into the still at the end of the process. As it can be seen, the process operation is feasible but not very efficient: a large reflux ratio is required despite a significant entrainer flowrate (total amount of entrainer to initial mixture amount ratio of 8.1). As a result, the final liquid amount in the reboiler is almost 5.2 times the initial charge. Similarly to the hexylamine case, this inefficiency was predicted by the analysis of the isovolatility curves. It should be noted that steps 2 and 3 take place in the distillation region where the composition of butyl acetate is high. In fact, the interception of the still path at the end of step 3 occurs at the binary side at a point located very close to the butyl acetate vertex. As it was highlighted by Lelkes et al. (1998), there is an opposite relationship between the minimum entrainer flowrate F_{min} and the entrainer composition in x_P. In Table 1, the highest entrainer composition values of x_P (e.g. 0.45 for hexylamine, 0.4 for propionitrile and 0.36 butyl acetate) are lower than those reported for homogeneous entrainers (Laroche et al., 1992) and this implies that the heterogeneous batch extractive distillation process requires a high amount of entrainer. In batch distillation, such an economical drawback can be overcome using a middle vessel column as was hinted above. On the other hand, it is not problematic for continuous distillation because the flowsheet usually involves two columns and the entrainer can be recycled from the second recovery column to the first extractive column.

FEASIBILITY ANALYSIS OF AN INDUSTRIAL HETEROGENEOUS BATCH EXTRACTIVE DISTILLATION CASE.

The two examples discussed above have concerned a simple ternary diagram that can be used for the separation of minimum boiling temperature azeotropic mixture by extractive batch distillation with a heterogeneous entrainer. In those cases, the heavy entrainer adds only an extra saddle binary

heteroazeotrope. Kohler et al. (1995) reported the industrial separation by batch extractive heterogeneous distillation of two organic components using water as heterogeneous entrainer. Water is a heavy entrainer that forms a heteroazeotrope with the light original component and a homogeneous azeotrope with the other primary component. Besides, the resulting ternary diagram exhibits an unstable ternary homogeneous azeotrope forcing the topological stability of all three binary azeotropes to be saddles. The ternary diagram is divided in four basic distillation regions by three unstable separatrices. Kohler et al. (1995) demonstrated experimentally in an industrial batch rectifying column that the saddle binary heteroazeotrope can be drawn as a vapor overhead by adding pure water at the column top. The performance of the process was improved by changing with time the water flowrate to maximize the amount of total distillate product with a fixed purity. They found that this operation is economically more advantageous than the traditional process involving a constant entrainer inlet flow.

According our knowledge, the paper of Kohler et al. (1995) is the first communication to describe the use of a heterogeneous entrainer for the separation of a non-ideal mixture by extractive distillation. Experimental results were presented but without any theoretical analysis about the performance of the process. In the following, we explain the mechanism by which the process is feasible using the same method described above knowing that ethyl acetate and ethanol are the original components of the mixture studied by Kohler et al. (1995) (Haverkamp personal communication, 2002). Unlike the two previous examples, the heterogeneous entrainer, water, has a positive deviation of Raoult's Law with both original components. However, a higher non - ideality is showed with the ethyl acetate due to the partial miscibility between water and the light primary component that produces a binary heteroazeotrope under determined conditions of temperature and pressure. Consequently, the addition of water to the original binary mixture produces a significant increase of the natural relative volatility between the primary components despite the existence of the homogeneous azeotrope ethanol – water. Table 4 displays the activity coefficients at infinite dilution of the two key components in its binary mixture and also when one of them is replaced with

water. The thermodynamic model NRTL was used with binary interaction coefficients reported in the DECHEMA Tables (Gmehling and Onken, 1982) at atmospheric pressure.

Using the same computational tools, all isovolatility curves are calculated and shown in Figure 6. Because of the presence of the ternary azeotrope, each isovolatility curve starts at the corresponding binary azeotropic point, passes through the ternary azeotrope and finishes at the opposite binary side. Now, the composition simplex is divided into six regions where the volatility order between all components can be established. Each region is limited by two isovolatility curves. In all regions located in the right side of the isovolatility curves the heavy component associated to each curve is the most volatile component. In the left region, the light component is the lightest. Based on this statement, the table included in Figure 6 indicates the volatility order of the components in each region. Another important feature is given by the fact that the isovolatility curve $\alpha_{A,B}$ reaches the heterogeneous part of the side of ethyl acetate – water (point x_P of molar composition of ethyl acetate equal to 0.3). Therefore, the heterogeneous batch extractive distillation process with feeding of water at the top tray is feasible and will give the binary heterogeneous azeotrope as vapor overhead like in the acetonitrile – water – butyl acetate example.

The sequence of batch distillation tasks proposed by Kohler et al. (1995) for the separation of ethyl acetate – ethanol with water is similar to the sequence showed in Figure 4 for the ternary mixture acetonitrile – water – butyl acetate. Unfortunately the authors did not provided a detailed description of the process and some operating conditions had to be inferred from some experimental results reported in their article: the initial charge F is located in region I with an approximated molar composition of ethyl acetate, ethanol and water of 0.85, 0.12 and 0.03 respectively. Nothing is said about the starting condition of the column, but we suppose that the first step is a conventional reflux total operation. Besides, we also assume that a 20 trays column is sufficient to replace the ternary azeotrope by the binary heterogeneous azeotrope thanks to the addition of water at the first top column tray in step 2. Experimental results showed in the article concern the variation of the water and distillate flowrates with time during step 3. No value of the reflux ratio

used by the authors is given. The decanter temperature was reported equal to 30°C and we suppose that the ethyl acetate purity in the distillate matches with the liquid – liquid equilibrium at this temperature value. In the paper, step 3 finishes at operating time of 22 hours when the prohibitively large water entrainer flowrate doesn't give any economical reason to recover the small quantity of ethyl acetate remaining in the still. The ternary mixture obtained as a final residue in the reboiler is considered as a waste stream of the process and no further purification was recorded. In a supplementary step, the ethyl acetate – rich phase drawn as distillate is recharged into the column to obtain this component in the still with the required purity.

Taking into account the operating conditions reported by the authors, we use the commercial simulator ProSim Batch (Prosim SA, 1991) to perform the separation in a batch rectifying column. Table 5 displays the operating conditions. The initial charge amount is estimated from the total amount of the distillate, its purity and the composition of the original mixture (F in Figure 7). A constant water flowrate is assumed during the whole operation at the value defined by the authors. Besides, the liquid reflux to the column is composed by the water-rich phase only and its amount is determined by the splitting ratio ω of the decanter heavy phase to the condensed overall liquid phase. Then, we consider that both liquid phases levels are constant into the decanter. Knowing the ω value and the initial distillate flowrate, we can estimate the vapor flow and consequently the reboiler heat duty. All these operating conditions along with the liquid holdup on the trays and the decanter are defined to make feasible the separation of ethyl acetate as distillate product during an operation time matching the experimental value. The column is considered as adiabatic and composed by 20 equilibrium stages.

Figure 7 displays the simulation results of the separation of the mixture ethyl acetate – ethanol with water by heterogeneous extractive batch distillation. The initial mixture F is charged in the still and the operation is started under infinite reflux conditions. It gives a liquid column profile which links the liquid composition in the reboiler (F_∞) with the unstable ternary homogeneous azeotrope (Figure 7). In the subsequent step 2, water is fed to the first tray of the column changing the relative

volatility between both original components. After 3.4 hours of operation, the composition of the binary heteroazeotrope is obtained in the liquid retained in the reflux drum. Besides, the still path follows a rectilinear direction determined by the feeding of water to the column and it crosses the unstable separatrix joining the ternary azeotrope and the heteroazeotrope. Unlike the previous example, the still path moves inside the heterogeneous liquid boiling envelope and all trays experience a liquid – liquid splitting. At the end of the step 2, the liquid column profile connects the punctual still composition with the stable node S_n located on the heterogeneous binary side ethyl acetate – water. Therefore, the vapor overhead composition is at the heteroazeotrope. It should be noted, that all extractive liquid profile lies in the heterogeneous region close the water vertex due to the small x_P value and the liquid – liquid split takes places even into the still. However, the original authors didn't report any operational problems during the execution of the process in the industrial column. Simulation results of step 3 are shown on Figure 6. In this case, water is also fed continuously at the top of the column while the ethyl acetate – rich phase is drawn as distillate product. Only the water – rich phase is refluxed at the column top and the process runs under a low reflux ratio due to the small value of the liquid – liquid splitting ratio ω into the decanter. The still path traverses the heterogeneous boiling region, moves out of it and reaches finally the binary homogeneous side ethanol – water close to the entrainer vertex. Table 5 shows the simulation results at the end of the step 3. 93.6 % of ethyl acetate is recovered in the distillate with a molar purity determined by the liquid – liquid equilibrium at the decanter temperature. In general, the separation is feasible with a high entrainer consumption. Here, the final liquid amount into the reboiler is twice its initial value and the ratio of total entrainer amount to the initial charge equals 2.1. Both parameters are lower than those obtained for the ternary system acetonitrile – water – butyl acetate even though both cases exhibit similar x_P values. The difference between them is produced by the fact that water changes more significatively the relative volatility of the original binary mixture.

CONCLUSIONS

In this article, we have presented some evidences that an entrainer which induces a liquid – liquid split and even forms a heteroazeotrope of intermediate boiling temperature can provide a feasible alternative for the separation of minimum boiling azeotropic mixtures by batch extractive distillation. So far, homogeneous entrainers which form no azeotropes with key component have been usually employed in extractive distillation process. Besides, the use of heterogeneous entrainers has mainly been restricted to azeotropic distillation due to the existence of unstable heteroazeotrope. Based upon thermodynamic data, we have performed the synthesis of heterogeneous batch extractive distillation using the notions of isovolatility curves and local volatility order to determine the key component to be drawn as distillate, the minimum amount of heterogeneous entrainer and the batch distillation tasks involved in the whole process. Because of the highly non-ideal behavior of such systems, the entrainers provide preferably the separation of the heterogeneous primary component as a top product. The performance of the novel process was presented for the separation of two binary azeotropic mixtures employing a heavy heterogeneous entrainer. The separation of the azeotropic mixture can be performed (1) by a similar process that those reported for homogeneous extractive distillation or (2) by obtaining the heteroazeotrope as a vapor overhead. The feasibility of the second alternative was corroborated via rigorous simulation for the simplest ternary diagram that can be used for this process and for a published industrial example involving a ternary system with two binary homogeneous azeotropic mixtures, a binary heteroazeotrope and a homogeneous ternary azeotrope. This new alternative increases the potential number of entrainers to be used in batch extractive distillation. However, this study has evidenced as a main drawback the elevated entrainer consumption. Therefore, the study of this non-conventional extractive process in a middle vessel column and, also, its extension to the continuous distillation is a promising non-explored area.

REFERENCES

Acosta-Esquijarosa, J., A. Arce, E. Rodil and A. Soto, "Thermodynamic study on binary and ternary mixture of acetonitrile – water – butyl acetate," *Fluid Phase Equilibria*, **203**, 83-98, (2002).

Bernot, C., M.F. Doherty and M.F. Malone, "Patterns of Composition Change in Multicomponent Batch Distillation," *Chem. Eng. Sci.*, **45**, 1207-1221 (1990).

Bernot, C., M.F. Doherty and M.F. Malone, "Feasibility and Separation Sequencing in Multicomponent Batch Distillation," *Chem. Eng. Sci.*, **46**, 1311-1326 (1991).

Fredenslund, A., R.L. Jones and J.M. Prausnitz, "Group-Contribution Estimation of Activity Coefficients in Non-Ideal Liquid Mixtures," *AIChE Journal,* **21**, 1086 – 1099 (1975).

Gmehling, J. and U. Onken. *Vapor – Liquid Equilibrium Data Collection*. *DECHEMA Chemistry Data Series*. Vol. 1. (12 parts); Scholium Intl., Frankfurt am Main, (1982).

Gmehling, J., J. Menke, J. Krafczyk and K. Fischer, *Azeotropic Data*. VCH Editor: Weinheim, (1994).

Köhler, J., H. Haverkamp and N. Schadler, "Discontinuous Rectification of Azeotropic Mixtures with Auxiliary Substances". *Chem. Ing. Tech.*, **67** (8), 967-971 (1995).

Lang P., H. Yatim, P. Moszkowicz and M. Otterbein: "Batch Extractive Distillation under Constant Reflux Ratio", *Comput. Chem. Eng.,* **18**, 1057-1069 (1994).

Laroche, L., N. Bekiaris, H.W. Andersen and M. Morari, "Homogeneous Azeotropic Distillation: Comparing Entrainers". *AIChE Journal*, **38**, 1309- 1328 (1992).

Lee, F.M. and J.C. Gentry, "Don't Overlook Extractive Distillation". *Chem. Eng. Progress*, **10**, 56-64, (1997).

Lee, F.M. "Extractive Distillation: Separating Close – Boiling – Point Mixtures". *Chem. Eng.,* **105(12)**, 112-121 (1998).

Lelkes, Z., P. Lang, B. Benadda and P. Moszkowicz, "Feasibility of Extractive Distillation in a Batch Rectifier". *AIChE Journal,* **44**, 810-822 (1998).

Modla G., P. Lang and K. Molnar, "Batch Heteroazeotropic Rectification of a Low Relative Volatility Mixture under Continuous Entrainer Feeding: Feasibility Studies". *CD-Rom Proceedings of 6th World Congress of Chemical Engineering, Melbourne, Australia*, (2001).

Matsuyama, H. and H. Nishimura, "Topological and Thermodynamic Classification of Ternary Vapor – Liquid Equilibria". *J. Chem. Eng. Jpn.,* **10**(3), 181 (1977).

Perry, R. H.; D.W. Green and J.O. Maloney, *Perry's Chemical Engineer's Handbook.* Seventh edition, McGraw Hill: New York., (1997).

Prausnitz, J.M., R.N. Lichtenhaler and E.G. Azevedo, *Molecular thermodynamics of fluid-phase equilibria*. Prentice – Hall, Engelwood Cliffs. New York, (1986).

ProSim S.A. reference manual on http://www.prosim.net (1991).

Rodriguez-Donis, I., V. Gerbaud, and X. Joulia, "Entrainer Selection Rules for the Separation of Azeotropic and Close Boiling Temperature Mixtures by Heterogeneous Batch Distillation". *Ind. Chem. Eng. Res.,* **40**(22), 4935-4950 (2001).

Rodriguez-Donis I, V. Gerbaud and X. Joulia, "Feasibility of Heterogeneous Batch Distillation" *AIChE Journal,* **48**, 1168-1178 (2002).

Sargousse, A.; J.M. Lelann, X. Joulia and L. Jourda, "D.I.S.C.o. : Un Nouvel Environnement de Simulation Orienté Objet." *Proceedings of MOSIM 99, Annecy, France*, 61-69 (1999).

Sorensen, J.M. and W. ARlt, *Liquid – Liquid Equilibrium Data Collection*. *DECHEMA Chemistry Data Series*.; Frankfurt am Main, (1979).

Yatim H., P. Moszkowicz, M. Otterbein and P. Lang, "Dynamic Simulation of a Batch Extractive Distillation Process", *Comput. Chem. Eng.*, **17**, S57-S62 (1993).

ACKNOWLEDGEMENT

This work is financially supported by the ALFA-Programme of the European Community. Its contribution was indeed highly appreciated along with Dr. Hans Haverkamp's cooperation for all essential information given to us about the industrial example.

FIGURE CAPTION

Figure 1. Sketch of a residue curve map ABE for the ternary diagram [120]

Figure 2. Isovolatility curves and volatility order diagram for acetonitrile – water – hexylamine. Tasks sequence for the heterogeneous extractive batch distillation process.

Figure 3. Simulation results of the operating step 2 for the separation of acetonitrile – water mixture with n-hexylamine.

Figure 4. Isovolatility curves, volatility orders for the water – acetonitrile – butyl acetate system. Tasks sequence for heterogeneous extractive batch distillation process.

Figure 5. Simulations results of the separation of acetonitrile – water mixture with butyl acetate by heterogeneous extractive distillation in a batch rectifier.

Figure 6. Isovolatility curves, volatility orders for the ethyl acetate - ethanol – water system.

Figure 7. Simulation results of the separation of the ethanol – ethyl acetate mixture with water by heterogeneous extractive distillation in a batch rectifier.

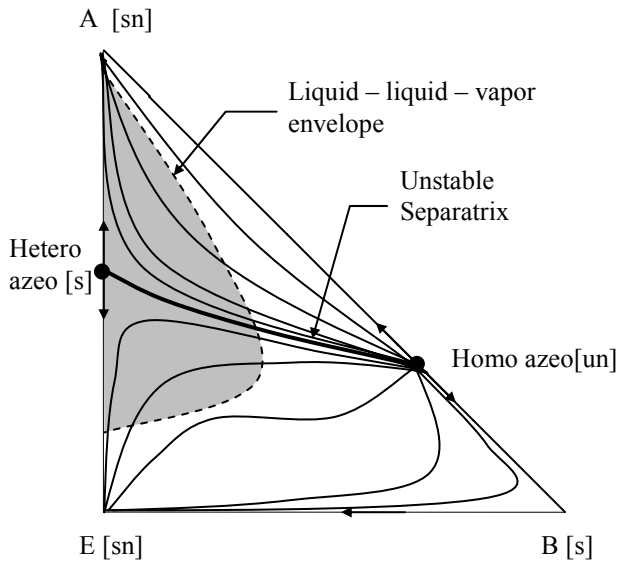

Figure 1. Sketch of a residue curve map ABE for the ternary diagram [120]

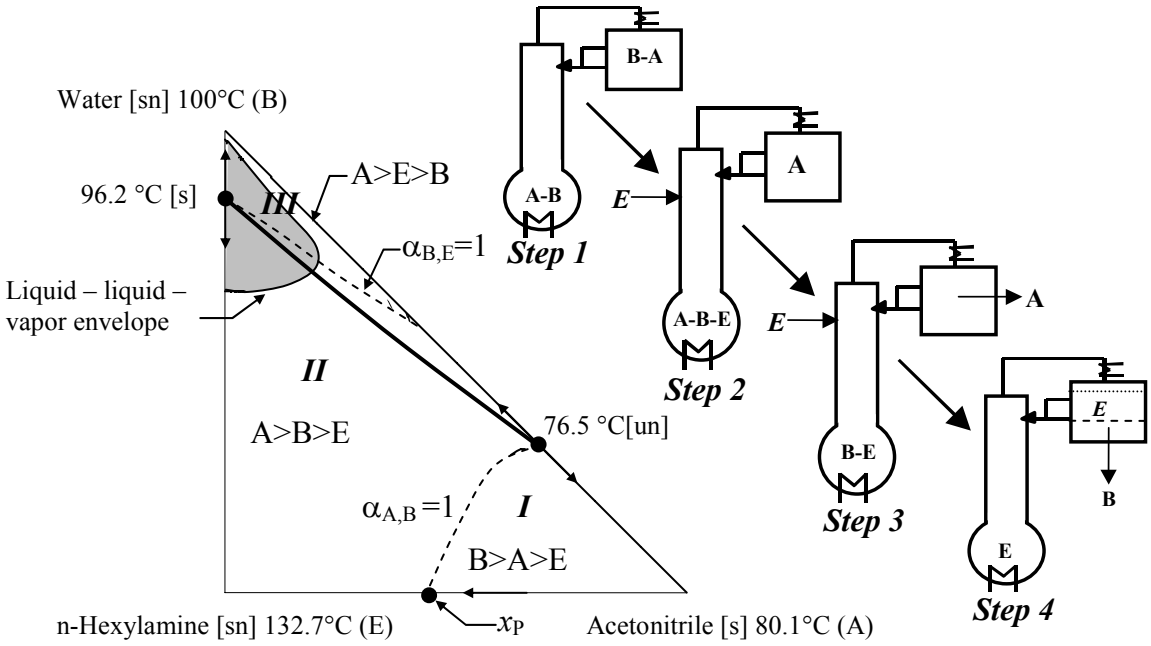

Figure 2. Isovolatility curves and volatility order diagram for acetonitrile – water – hexylamine. Tasks sequence for the heterogeneous extractive batch distillation process.

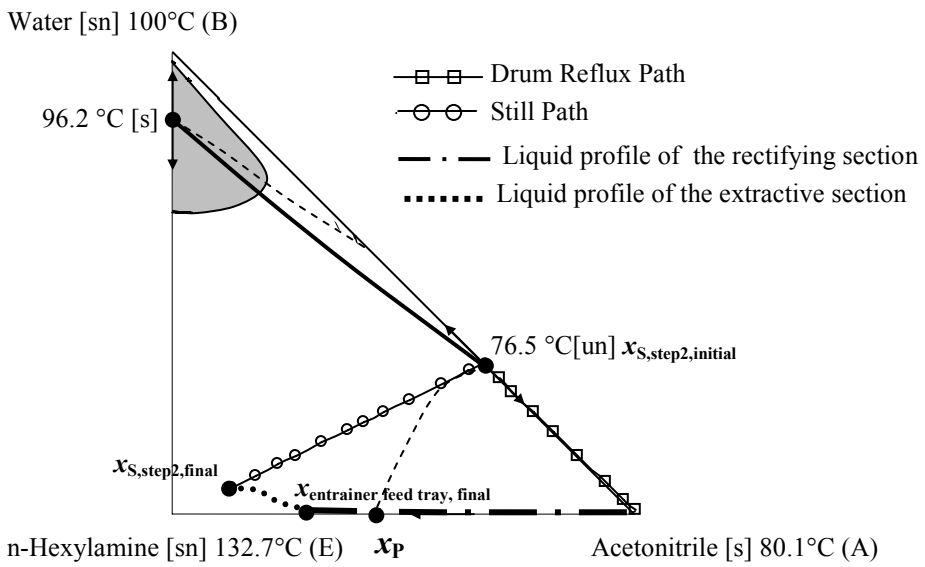

Figure 3. Simulation results of the operating step 2 for the separation of acetonitrile – water mixture with n-hexylamine.

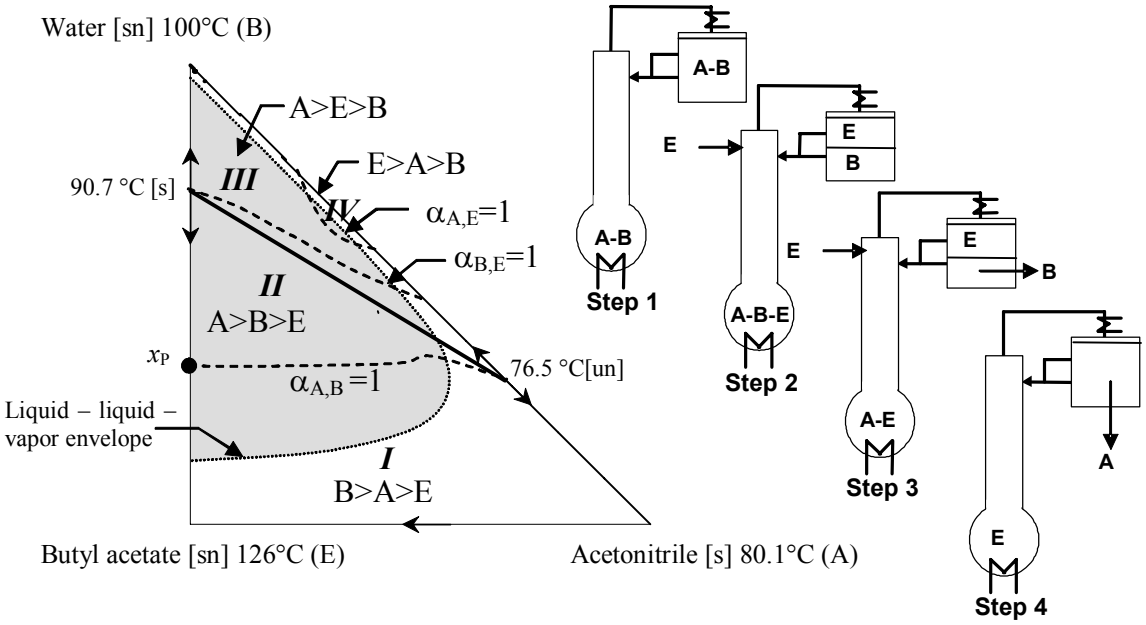

Figure 4. Isovolatility curves, volatility orders for the water – acetonitrile – butyl acetate system. Tasks sequence for heterogeneous extractive batch distillation process.

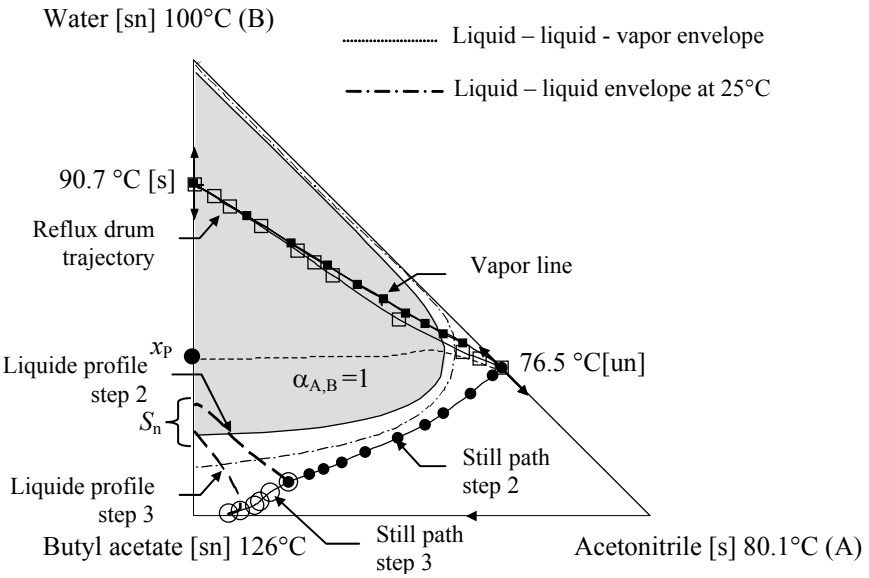

Figure 5. Simulations results of the separation of acetonitrile – water mixture with butyl acetate by heterogeneous extractive distillation in a batch rectifier.

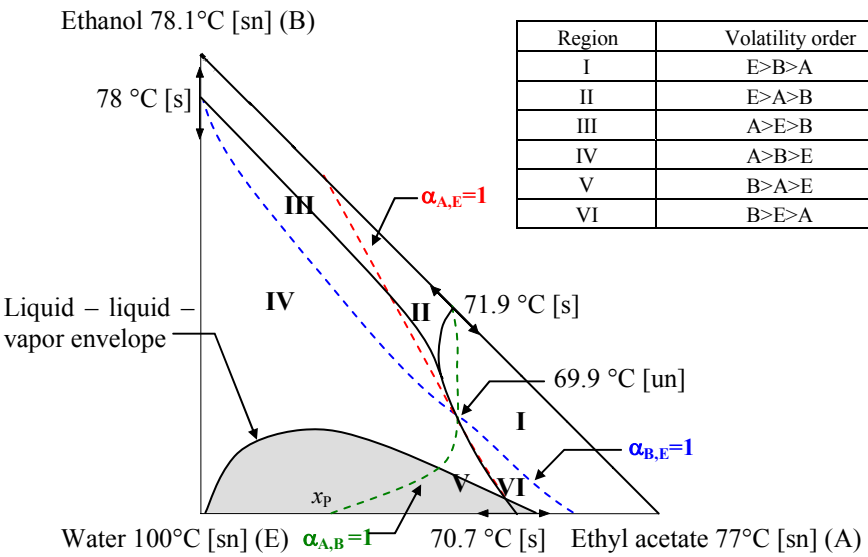

Region	Volatility order
I	E>B>A
II	E>A>B
III	A>E>B
IV	A>B>E
V	B>A>E
VI	B>E>A

Figure 6. Isovolatility curves, volatility orders for the ethyl acetate - ethanol – water system.

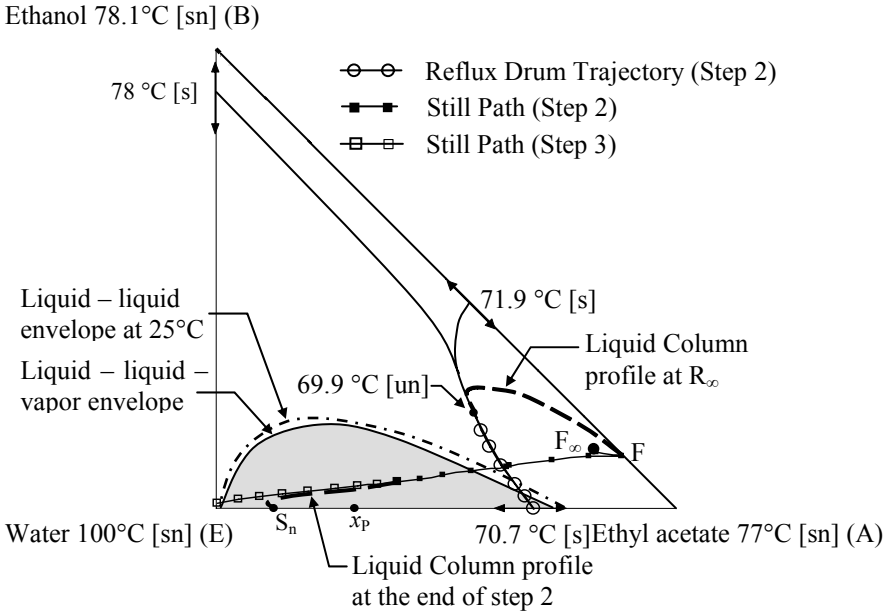

Figure 7. Simulation results of the separation of the ethanol – ethyl acetate mixture with water by heterogeneous extractive distillation in a batch rectifier.

TABLE CAPTION

Table 1. Comparison of heterogenous candidate entrainers for the separation of acetonitrile (1) and water (2)

Table 2. Operating conditions and simulation results for step 2 of the separation of acetonitrile – water using n-hexylamine by Heterogeneous Extractive Distillation in a batch rectifier

Table 3. Operating conditions and simulation results for the Heterogeneous Extractive Distillation of acetonitrile – water using butyl acetate in a batch rectifier

Table 4. Thermodynamic properties of the mixture ethyl acetate (1) – ethanol (2) – water (3)

Table 5. Operating conditions for the Heterogeneous Extractive Distillation of ethyl acetate – ethanol using water in a batch rectifier

Entrainer	Boiling Point (°C)	γ_1^∞	γ_2^∞	$\gamma_1^\infty / \gamma_2^\infty$	x_P
Acetonitrile (1)	80.1	-	11.21	1.60	-
Water (2)	100.0	7.00	-		-
Propionitrile	97.4	1.031	7.7818	0.13	0.4
Hexanenitrile	163.6	0.9769	4.7411	0.20	0.39
Hexylamine	132.7	2.9461	2.0914	1.41*	0.45
Heptylamine	156.9	3.0050	2.3354	1.29*	0.37
1 pentanol	137.8	1.8358	3.0919	0.59	0.17
1 hexanol	157.4	1.5888	2.8487	0.56	0.1
Butyl acetate	126	1.2068	5.1187	0.23	0.36
Pentyl acetate	148	1.1468	4.3947	0.26	0.35
2 pentanone	102.3	1.1544	5.2339	0.22	0.38
2 hexanone	127.7	1.1534	4.4418	0.26	0.37
Ethyl benzene	136.2	2.9310	16.11	0.18	0.18
Propyl benzene	159.2	2.64	10.717	0.25	0.17

Table 1. Comparison of heterogenous candidate entrainers for the separation of acetonitrile (1) and water (2)

.

Operating parameters	Values
Initial charge (mol)	25
Composition of the initial charge	[0.65; 0.35; 0.0]
n-hexylamine feed flow rate (mol/hr)	21.5
n-hexylamine feed composition	[0.0; 0.0; 1.0]
n-hexylamine feed tray number	5
Total number of equilibrium stages (condenser and reboiler incl.)	32
Total column liquid holdup (mol)	1.62
Heat reboiler duty (W)	150
Operating pressure (atm)	1
Reflux Ratio	Total

*molar composition vector order is [acetonitrile – water – n-hexylamine]

Table 2. Operating conditions and simulation results for step 2 of the separation of acetonitrile – water using n-hexylamine by Heterogeneous Extractive Distillation in a batch rectifier

Operating parameters	Simulation Results*
Initial charge (mol)	12
Composition of initial charge	[0.6743; 0.3257; 0.0000]
Butyl acetate feed flow rate (mol/hr)	21.5
Butyl acetate feed composition	[0.0; 0.0; 1.0]
Butyl acetate feed tray number	1
Total number of equilibrium stages incl. decanter and reboiler	62
Total tray liquid holdup (mol)	0.22
Decanter liquid holdup (mol)	1.4
Decanter Temperature (°C)	25
Heat reboiler duty (W)	150
Operating pressure (atm)	1
Reflux Ratio	13.5 - 28
Distillate average composition (water-rich phase)	[0.0002; 0.9957; 0.0041]
Composition of entrainer-rich phase into decanter (end of step 3)	[0.0007; 0.0966; 0.9026]
Charge into reboiler at the end of step 3 (mol)	62.8
Liquid composition in the reboiler (end of step 3)	[0.0774; 0.005; 0.9176]
Total operation time step 2 + Step 3 (h)	4.5

*molar composition vector order is [acetonitrile – water – butyl acetate]

Table 3. Operating conditions and simulation results for the Heterogeneous Extractive Distillation of acetonitrile – water using butyl acetate in a batch rectifier

Entrainer	Boiling Point (°C)	γ_1^∞	γ_2^∞	$\gamma_1^\infty / \gamma_2^\infty$	x_P
Ethanol (1)	78.1	-	2.3437	1.006	-
Ethyl-acetate (2)	77	2.3567	-		-
Entrainer: Water (3)	100.0	57.937	5.773	10.04	0.3

Table 4. Thermodynamic properties of the mixture ethanol (1) – ethyl acetate (2) – water (3)

Operating parameters	Simulation Results*
Initial charge (Kg)	4930
Composition of initial charge	[0.85; 0.12; 0.03]
Water feed flow rate (Kg/hr)	400
Water feed composition	[0.0; 0.0; 1.0]
Water feed tray number	1
Total number of equilibrium stages (decanter and reboiler)	22
Total tray liquid holdup (Kg)	200
Decanter liquid holdup (Kg)	100
Decanter Temperature (°C)	30
Heat reboiler duty (KW)	50
Operating pressure (atm)	1
Reflux Ratio	0.1 – 2.4
Distillate average composition (ethyl aacetate-rich phase)	[0.7343; 0.0029; 0.2628]
Recovery of ethyl acetate (%)	93.6
Composition of water-rich phase into decanter (end of step 3)	[0.0093; 0.0002; 0.9905]
Charge into reboiler at the end of step 3 (Kg)	10179.1
Liquid composition in the reboiler (end of step 3)	[0.0036; 0.0129; 0.9835]
Operation time step 2 (h)	3.4
Operation time step 3 (h)	22

*molar composition vector order is [ethyl acetate – ethanol - water]

Table 5. Operating conditions for the Heterogeneous Extractive Distillation of ethyl acetate – ethanol using water in a batch rectifier