HAL
open science

Assessment of chemical risk during product life cycle: a new method to be used during product design

Maud Lemagnen, Fabrice Mathieux, Bertrand Laratte, Daniel Brissaud

To cite this version:

Maud Lemagnen, Fabrice Mathieux, Bertrand Laratte, Daniel Brissaud. Assessment of chemical risk during product life cycle: a new method to be used during product design. 16th International CIRP Conference on Life Cycle Engineering, May 2009, Cairo, Egypt. pp.91_98. hal-00455699

HAL Id: hal-00455699

https://hal.science/hal-00455699v1

Submitted on 10 Feb 2010

HAL is a multi-disciplinary open access archive for the deposit and dissemination of scientific research documents, whether they are published or not. The documents may come from teaching and research institutions in France or abroad, or from public or private research centers.

L'archive ouverte pluridisciplinaire **HAL**, est destinée au dépôt et à la diffusion de documents scientifiques de niveau recherche, publiés ou non, émanant des établissements d'enseignement et de recherche français ou étrangers, des laboratoires publics ou privés.

Assessment of chemical risk during product life cycle: a new method to be used during product design

Maud Lemagnen[1,2], Fabrice Mathieux[1], Bertrand Laratte[3], Daniel Brissaud[1]

[1] G-SCOP Laboratory, University of Grenoble, Grenoble, France

[2] Safran group, Réau, France

[3] Evea, Nantes, France

Abstract

Chemical risk assessment becomes an important topic since European Commission promulgated REACh regulation. Chemicals traceability in many products put in the market will probably lead new methodological developments in the next years.

The article proposes the description of a method dedicated to chemical risk characterization, related to substances and material existing in a product, during its whole life cycle. The method is tested in an aircraft equipment company. Substance toxicity should be targeted through the equipment composition and assessment should be possible using design data. Furthermore, aircraft equipment life cycle presents specific particularities, which define exposure scenario.

The method is based on a chemical risk assessment method used by Health and Safety experts at the manufacturing plant level and was modified in order to be applied to products life cycle. The article present a case study made in the company, and discusses the future progress axes of the proposed method

Keywords:

REACh, life cycle, ecodesign, product, chemical risk, exposure, aeronautics

1 INTRODUCTION

"Traceability" is a recurrent word in industrial activities. Pointing out quality topics, traceability is nowadays synonymous to product composition knowledge. REACh regulation accelerates chemical traceability process in all European industries, recovering any type of sector. Used to technical traceability, aeronautical sector has now to face this new requirement corresponding to chemical risk assessment of any aircraft product.

This article presents a method which is currently tested in an aeronautical company, in association with designers' team and environment engineers.

After presenting context and need analysis, the article focuses on the presentation of the method. Then, an application case illustrates the method and discusses its benefits.

At last, possible ways of improvement for the method are proposed.

2 CONTEXT PRESENTATION: REACH REGULATION AND AERONAUTICS

REACh regulation has been promulgated on June 1st, 2007 [1]. This new regulation must be applied in every country of the European Union, and aims at harmonizing chemicals management within European market. This regulation also sounds as an environmental revolution for every existing industries, because of its application' spectrum. No activity, except specific defence or nuclear ones should be exempted from REACh requirements. The regulation also induces new chemical management modalities, from manufacturing processes to final product.

REACh's global impacts on industry could be divided into two main problematic:

At the plant entry: potential substance ban could affect product or material supply or induce manufacturing process stop.

At the plant exit: every manufactured product put in the market should be very high danger substance free, or associated with specific data related to their potential risk.

Chemicals obsolescence risks and **substitution principles appliance** are interpreted as two of the main consequences of REACh regulation implementation for European industries [2].

Referring to aeronautics, REACh regulation brings a new transparency requirement, asked for by authorities and customers. Aeronautical activities are usually characterized by technical traceability. Indeed, no chemicals management regulation, centered on intrinsic substances risk, used to directly impact that sector, as for example in the automotive sector. REACh requirements, as previously mentioned, should now be managed in aeronautics activities, as any other specific technical or economical requirement.

Compared to automotive sector which is familiar to substances and chemicals management, e.g. using Intenational Material Data System, aeronautics should develop new tools and methods in order to comply with these new environmental challenges.

3 NEEDS ANALYSIS

3.1 Design activity as a starting point

Even though tools should be developed to help aeronautical industries to answer REACh requirements, the first important point to consider is the targeted industrial activity where REACh is to be implemented.

REACh text points out upstream industrial activities, such as Research and Development or Design, to be the starting point of intrinsic chemical product risk management [1]. REACh text notably refers to ecodesign principles, where the materials, shapes and any determining technical property of a product could be chosen in order to decrease its environmental impact during its whole life cycle.

3.2 Particular aeronautical product development constraints

The proposed method, which is described next, is tested in aeronautical sector. In order to adapt the different data to be used in the method, a clarification of development constraints has to be made. The synthesis which is here proposed proceeds from the experience on the field, in the company where the method is tested

Some industrial particularities should be outlined:

- Aeronautical products, from whole plane to engine equipments, are characterized by **long life duration** (20-30 years long).
- During its whole life cycle, an aircraft can undergo numerous changes, notably due to technical or material properties improvements. In those cases, a redesign of component is lead and a replacement of one piece or total assembly in conducted. Aeronautics could be characterized by a **continuous design process**.
- **Any evolution has to be validated** subdue to aircraft navigability regulation. Any material, process even shape modification is subdued to a complex acceptance process. Every modification should be notified in technical documentation, and test should be lead to prove the modification compliance to technical and safety requirements.

One has to take the previous constraints into account in order to correctly guide technical development and design teams to choose a solution complying with straight navigability rules and new chemicals regulation requirements.

In conclusion, aeronautical activities present specific constraints which restrain the possibilities of chemical obsolescence management or critical substances substitution.

4 IDENTIFIED LIMITS OF CURRENT METHODS USED IN THE AERONAUTICAL SECTOR

4.1 Methods overview

Nowadays, the most common method which is used in the sector to ensure chemicals traceability is based on chemicals lists . Such chemicals lists propose substances classification, according to their toxicity and their legal status on the considered market (European Union, United States). Identified lists currently used in aeronautical field are usually built on three levels:

- Banned substances level
- Authorized substances for particular applications
- Substances to be closely watch.

A mixture, which is composed from two to numerous substances, can also be classified, according to concentration rules, usually determined through legal texts. By the way, a mixture can also be classified according one of the three criticity level.

4.2 Why choosing chemical risk assessments instead of developing chemicals traceability method?

As pointed out by [3] and [4], such method presents an important limit, due to its qualitative approach. Substances, and furthermore mixtures and materials are classified into 3 levels. This approach can surely be efficient for a first order analysis, but as we previously presented aeronautical product specificities, we suggest that it could not totally fit development and design constraints. In other words, only considering a toxicity label can strongly restrain the panel of solutions.

In order to discriminate more finely identified substances, mixtures or materials, we propose to extend the assessment to a quantitative chemical risk assessment.

This approach proceeds from a pragmatical observation: a component made of a toxic material does not present the same risk as it is positioned in a carter, with no contact to the exterior, as it is positioned in a way to be easily manipulated.

Chemical risk assessment is traditionally based on two elements identification [5]:

- **Danger**: as an intrinsic characteristic of a chemical (substance, mixture or material), usually defined through toxicity constants,
- **Exposure**: “contact of a chemical, physical or biological agent with the outer boundary of an organism. Exposure is quantified as the concentration of the agent in the medium in contact integrated over the time duration of that contact” [5].

Chemical risk assessment tends to answer the discrimination problematic.

In order to comply with the identified constraints and to lean on existing methods, we propose to build a risk assessment method aiming at being sufficiently precise to discriminate substances according to their toxicity, and as simple as possible to be easily used by non-experts.

4.3 Combination of risk assessment and life cycle approach

Potential risk assessment method, INRS

This method has been developed to be used by safety managers in industrial production shops [6]. It aims at characterizing chemical risk linked to mixtures and chemicals use and storage. This method lays on the identification of two parameters, danger and exposure. Combination of these two parameters lead to the calculation of a potential chemical risk score. According to the value of these score, risk can be identified as very hazardous, mean or acceptable. This type of analysis helps managers to build roadmaps for their activities.

This method has been here studied for two aspects:

- **Data access:** in order to calculate potential chemical risk, used data can simply be collected in situ. Danger is linked to chemical risk phrases (listed in chemical's Material Safety Data Shit –MSDS), Exposure is calculated from quantity ratio and frequency of chemical use.
- **Decision making:** this method is suited to simply help manager to prioritise prevention actions regarding to identified potential risk. One has only to manipulate classes number, from 0 to 5, and evaluate danger, exposure and finally potential risk score thanks to matrix proposed by method designers.

INRS method appears to be very relevant risk assessment method for non expert. It leads to significant results which can be used for decision making during a risk prevention process. However, this method only applies to manufacturing and maintaining shops.

Life cycle assessment

Life Cycle Assessment (LCA) calculation methodologies are numerous but all based on the same structure, notably defined by ISO 14040 international standards.

LCA are used as assessment method for environmental management. It has been developed for environmental assessment of products and services, regarding their whole life cycle. Thus, LCA only permits to assess potential environmental impacts from different types (air pollution, land use, toxicity …) [7]. LCIA (Life Cycle Impact Analysis) aims at converting flows into potential impacts (midpoint) and consequences or effects (endpoint).

The most currently used LCIA methods lead to calculate potential impact but don't present same indicators regarding same impacts.

EDIP, CML or Impact 2002, using midpoints, are based on different toxicological impact calculation methodologies and resulting Human Toxicity indicators can be different at last.

These methods use parameters to obtain the indicator regarding human toxicity presented in the form of an equivalency factor (for CML and Impact 2002) or in terms of a critical volume approach (for EDIP). In the other hand, the most currently used endpoint indicator is in Disability Adjusted Life Year (or DALY, method developed by WHO) [8]

But each method contains limitations, like spatio-temporal parameters which have an important impact regarding the environment. In omitting these parameters, results for this indicator can present high uncertainties. Methodologies for the Human Toxicity indicator in LCA are still under devlopment. However, a solution can be used to complete LCA results, with the Quantitative Health Risks Assessments [9]. However, this is an expert tool and therefore cannot be used during design.

Olsen et al notice that despite of different goals, risk assessment as defined by [5] and LCA should be used as complementary tools [10]. Even if LCA is "not suited for absolute assessments", it "identifies the most hazardous substances that appear in considerable amounts in the whole life cycle of the given product". In the other hand, risk assessment is considered as an "absolute assessment", "which is fundamentally time- and site-specific".

4.4 Strengths and weakness of the two methods regarding needs analysis

We propose to compare strengths and weakness regarding need analysis formerly described. The elements of this comparison are compiled on Table 1.

The two methods present complementary strengths which answers the needs identification.

We decided to base our proposed method on the risk assessment method proposed by INRS, thanks to its structure accessible to non-experts. However, we try to expend it considering the Life Cycle Assessment philosophy, proposing to apply the chosen method to product life cycle.

	Strength	**Weakness**
Risk assessment, INRS	• data access simplified • Limited parameters needed to assess risk • Result immediately usable to orient decision • Usable by non experts	• Designed to be applied for risk linked to chemical storage • Doesn't take account of product itself, nor its life cycle
Life cycle assessment	• Applies to product and life's cycle's stages • Discriminates different exposure scenario	• Needs numerous data to be run • Expert tool

Table 1: Strength and weakness of risk assessment method and life cycle analysis regarding to identified needs

5 PROPOSITION OF A CHEMICAL RISK ASSESSMENT METHOD RESPONDING TO NEW INDUSTRIAL DUTIES

Definition of the proposed method's application area

Target users

As identified by REACh regulation, design stage should be one of the level of chemicals traceability. The risk assessment method aims at being applied by design teams [4]. As evidence, this method should be implemented with data only extractible from technical documents directly available at design stage. Chemical risk assessment should not call upon particular skills, such as toxicology.

Target users should be able to interpret assessment results without any ambiguity.

Product's life cycle

Risk assessment method should apply to whole product life's cycle. As recommended by Article 33 in REACh regulation text [1], product manufacturers should be able to treace chemicals and substances all along their product life cycle.

Aeronautical products, as previously said, present particular life cycle. Aeronautical products are also submitted to numerous maintenance cycles. Even though manufacturing and maintenance are the best known phases, the other phases composing aeronautical product life cycle (Tests End of life), should be explored and exploited in order to correctly answer the need analysis. Thus, we'll firstly study manufacturing and maintenance phases which nowadays present the most complete data.

Product intrinsic chemical risk

If we consider each product's life cycle stage, we can define two main sources of chemical exposure:

- Product itself,
- Manufacturing / maintenance process.

Exposure targets should be human operators, as the product is always manually manipulated during any manufacturing / maintenance process, and environment (ecosystems).

The first hypothesis is to consider exposure remaining from the product itself and from the chemicals used during manufacturing or maintenance processes (such as the free area of a surface treatment bath).

The second hypothesis is to consider the maximum area of a product to be in contact with an "organism boundary" (operator), or the environment.

An uncertainty proceeds from the fact of counting twice a substance (typical case for surface treatments) as exposure is determinate according to the criteria of the first hypothesis. We propose, as a first approach, to use only the second hypothesis to evaluate exposure parameter. In the next paragraphs, we would only consider the assessed product specific areas.

This hypothesis can be considered as upper bound, though all the manufacturing and maintenance processes are not manual and do not require human presence.

By the way, using the second hypothesis in order to define the way we would assess exposure parameter, we can say that the proposed method applies to product **intrinsic chemical risk**.

5.2 Structure of the proposed method

The proposed method has partially been presented in [4]. The method consists in four steps,:

- **Technical data extraction step:** any substance, mixture or material composing the final product are listed from design bill and any complementary document used during the design stage
- **Hazard qualification step**: identified product subcomponents are compared to a substance list, as previously described. According to concentration rules, single substance, mixture or material get a criticity label, which defines its intrinsic danger.
- **Hazard quantification step**: in order to discriminate different sub components which would have been applied the same criticity label, a chemical risk assessment is run. This assessment, based on the method proposed by INRS [6], leads to an organization in hierarchy of the risk presented by each sub component.
- **Decision making step**: according to a grid defined by risk assessment experts [4], obtained results can be interpreted. According to the final risk level, designer can choose to substitute, reduce or ask for an exemption for one identified sub component.

6 SOURCES OF INFORMATION USED IN THE METHOD DURING DESIGN ACTIVITIES

6.1 Hazard qualitative assessment: Danger levels evaluation

Danger levels are determined very soon in the method process, i.e. during the hazard quantification step. As described in [4], this step consists in applying a hazard level to substance, mixture or material, according to a referential notably elaborated thanks to regulatory data. The referential is built on five levels, which are based on risk phrases family, from innocuous to very hazardous. Built on the same basis, the danger levels proposed by INRS are similar to the referential ones, so that the transition could be easily made. Hazard or danger data (which are synonymous in this context) are collected from mixtures and materials MSDS. A database [3] has been built. It compiles all mixtures and materials specified and used in the company. One can find mixture or material danger label searching through chemical, design or commercial data.

Such database has experimentally been built at one of Safran Group company's design sector and been used to develop equipment cartography (see "case study" section).

6.2 Hazard quantification assessment: Exposure levels evaluation

Proposition of a hypothesis for exposure assessment

We decided to limit the product risk assessment to its intrinsic risk. Even if danger is directly linked to chemical, exposure assessment can vary, because of the different routes of exposure [5]. In a first approach, we propose an hypothesis in order to limit the area of assessment.

We consider that parts of the product susceptible to present risk are those which can be easily manipulated. As a first approach, we only consider all exterior surfaces.

Different production processes are applied to surfaces. We only consider the treatments which imply a chemical surface modification such as paintings, coatings or surface treatments. We also consider all processes which consist in adding materials (brazing, glue…)

Other process such as machining don't modify at last chemical material surfaces properties. Materials or alloys which are not coated are supposed to present a lower chemical risk, due to intrinsic structure (crystal, matrix…).

Determination of quantity levels

Initially, quantity levels are determined thanks to the ratio between chemical weight and maximal stored chemical weight, used as a reference. According to the ratio value, five classes of quantity are determined, varying between 0 and 100%.

In order to determine quantities, calculation should be made from design documents. Designers are able to automatically determinate exterior surfaces of the assessed product using design software (e.g. CAD or PLM software).

Then industrialization documents give precious data about coatings and paintings properties (density, thickness layer…). Therefore, one has to notice that even those data are exact for mechanical process, the variability of quantity for manual processes such as gluing can be important.

We propose to use the same ratio, translated to product purpose: **quantity level should be determined using chemical weight and total product weight**.

Determination of frequency levels

In the same way, we decided to keep the INRS method levels classification. **We applied time ratio to the different life cycle stage duration**, in order to propose an adapted frequency classification.

7 APPLICATION CASE: ELECTRONIC CONTROL UNIT (ECU)

7.1 Equipment description

Electronic Control Unit is one of the numerous engine equipments designed and produced by Safran group companies. Such equipment is represented on Figure 1

This equipment is connected to the engine and its main functions are to regulate the engine and to ensure its functional safety. Basically, the ECU is constituted with a metallic carter containing electronic printed cards.

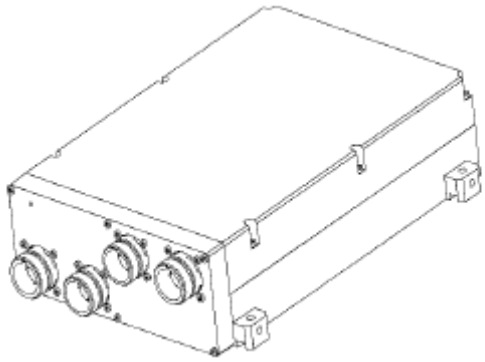

Figure 1: Electronic Control Unit

We propose to apply the proposed method to the ECU, regarding two aspects:

- Lead contained on the printed cards
- Metallic carter coating.

For confidentiality reasons, this case study does not present real data.

7.2 ECU's life cycle and relevant data for risk assessment

General data related to life cycle stages

ECU mean life's duration is defined to be 20,000 hours as it completes an aeronautical engine. One other important figure is MTBF (Mean Time Between Failure), which is fixed to 5,000 hours.

Data concerning manufacturing, maintaining operations, tests have been collected in the different sectors of the company responsible for the ECU commercialization. It was not possible to collect any data concerning the end-of-life stage. The life cycle stages duration are the following, counted for 5000 hours of use:

- Manufacturing :
    - ECU : 226 hours
    - Printed Card : 132 hours
- Total test time: 282 hours
- Maintaining operations :
    - ECU: 117 hours
    - Printed card: 70 hours
- End of life: no data available.

One other important element is weight. ECU weights 4500g while a printed card weights 500g.

General data related to ECU coating

Impacted ECU's carter surface has been evaluated to 0,36 m². This surface is coated with chromium solution, used for its anticorrosive property.

The coating process is characterized with the deposit of a 1g/m² layer.

We chose that process because of high toxicity due to chromium presence.

General data related to printed cards brazing

Electronic component are brazed with a lead containing brazing paste. This is a mechanical operation. Calculation of total lead quantity deposited on cards has been made according to design schemes [3]. Total amount of pure lead has been evaluated to 4,5g per printed card.

7.3 Method's application

Danger and exposure level evaluation

Danger results from risk phrase linked to the considered substance. Lead is quoted 4 and Chromium is quoted 5.

In order to determine Exposure, quantity and frequency levels have to be identified.

Quantity levels refer to classes which have been detailed on INRS method [6]

In order to determine frequency levels, we applied to each life cycle phase the different ratio used in the initial method. These results can be found on Table 2.

	Manufacturing		**Test**	**Use**	**Maintenance**		**End of life**
	ECU	**Card**	**ECU**	**ECU**	**ECU**	**Card**	
0	0 hour	0 hour	0 hour	0 hour	0 hour	0 hour	0 hour
1	≤ 3 hours	≤ 2hours	≤ 4 hours	≤ 274 hours	≤ 2 hours	≤ 1 hour	No Data
2	19 hours	11 hours	23 hours	1644 hours	10 hours	6 hours	No Data
3	46 hours	27 hours	58 hours	4110 hours	24 hours	14 hours	No Data
4	≥ 93 hours	≥ 54 hours	≥ 116 hours	≥ 8219 hours	≥ 48 hours	≥ 29 hours	No data

Table 2: Inferior limits for frequency determination levels

Results

Results are shown on Table 3 and 4.

	Quantity (g)	Duration (hours)	Danger level	Exposure level	Risk score
Manufacturing	0,4	80	5	1	10,000
Test	0,4	140	5	1	10,000
Use	0,4	5000	5	1	10,000
Maintenance	0,4	60	5	1	10,000
End of life	0,4	No Data	No Data	No Data	No Data

Table 3: Assessment results for chromium coating

	Quantity (g)	Duration (hours)	Danger level	Exposure level	Risk score
Manufacturing	4,5	132	4	1	1,000
Test	4,5	No contact			Not relevant
Use	4,5	No contact			Not relevant
Maintaining	4,5	70	4	1	1,000
End of life	4,5	No Data	No Data	No Data	No Data

Table 4: Assessment results for lead brazing

No data were available to assess ECU's and printed card end of life.

These results must be read as the potential chemical risk related to the analyzed substances when manipulating the product without any individual protection.

Risk linked to chromium appears at every assessed life stages. That is not the case of lead, which chemical risk is identified during manufacturing and maintaining stage.

Lead is used for brazing process, and exposure is only identified during manufacturing and maintaining phases.

Concerning chromium, which can be found in the ECU coating, the exposure probability gets higher than lead's one, because of the equipment manipulation during manufacturing, tests, maintaining and also end-of life phases.

Potential risk scores are roughly linked to danger level of assessed substance.

Regarding these results, without considering others design requirements, chromium coating should be studied first, in order to find ways of substitutions or in order to reduce potential contact between human, environment and the treated surface.

8 DISCUSSION

Considering actual development level of the method, we could say that this type of assessment is sufficient in order to comply one of REACh's requirement which is to notify Very High Concern substance's presence when it's concentration is upper than 0,1%.

Anyway, consulting related documents to REACh regulation, emitted by European Institutions, indicates that chemical risk assessment should take exposure scenario into account [5].

8.1 Improvement of exposure assessment

In order to anticipate REACh requirements or even customers requests, exposure assessment should be improved. But we have to keep the idea that exposure assessment should be performed by non-experts, from technical and design data. Next questions have to be studied:

- Should exposure scenario or routes be detailed (skin contact, ingestion…)?
- What about chemical modification of coatings during equipment life cycle (heat, pressure …)?
- How can the transferability potential of a substance to a boundary be evaluated?
- How can the real contact surface of equipment be evaluated?

8.2 Taking account of manufacturing and maintaining process

The actual version of the method focuses on intrinsic product chemical risk.

When applying Life Cycle Assessment principles, one should consider material flows, notably dusts and wastes, linked to the use of a manufacturing or maintaining process.

Due to its area of appliance which is the product, the proposed method should be extended to the risk assessment of manufacturing and maintaining process.

9 CONCLUSION

The proposed chemical risk assessment method was initially based on existing tools developed by another sector (Health and Safety) and has been modified in order to be applied to Life Cycle Engineering sector.

The INRS approach, which was chosen as a basis to develop the presented method, has an important advantage due to its intuitive structure and application, but as it is said by its authors, this method doesn't fit materials and product's life cycle assessment.

We consider that this approach, which was initially used in production plants, can be improved in order to answer some of REACh regulation requirements dedicated to products, and also to be used by designer's team, who are non toxicology experts.

The current method version has to evolve, notably to include a better description of exposure scenario (substance transferability, contact surface …).

Life cycle assessment methodology should also be more deeply associated with method development, in order to define more correct limits of assessment area (manufacturing and maintaining processes, intrinsic product risk).

Test with real design teams will have to be carried out in the next future to test the usability of the method.

10 REFERENCES

[1] (EC) No 1907/2006 of the European Parliament and of the Council of 18 December The European Parliament and the Council , Regulation 2006 concerning the Registration, Evaluation, Authorisation and Restriction of Chemicals (REACH), establishing a European Chemicals Agency, amending Directive 1999/45/EC and repealing Council Regulation (EEC) No 793/93 and Commission Regulation (EC) No 1488/94 as well as Council Directive 76/769/EEC and Commission Directives 91/155/EEC, 93/67/EEC, 93/105/EC and 2000/21/EC, Official Journal of the European Union, n° L 396/1, 30. 12. 2006

[2] AIRBUS S.A.S, SAFRAN, FIM, RENAULT, GIFAS, PSA Peugeot Citroën, FEDEM, Schneider Electrics, FIEV, REACh Guide de lecture version 2, 2008.

[3] Brissaud, D., Lemagnen, M., Mathieux, F., A new approach to implement the REACh directive in engineering design, 2008, International Design Conference – Design 2008, Dubrovnik, Croatia.

[4] Lemagnen, M., Mathieux, F., Brissaud, D., How managing more efficiently substances in the design process of industrial products? An example from the aeronautical sector, 2008, 2nd International Seminar on Society and Materials, Nantes, France.

[5] Risk Assessment Forum U.S. Environmental Protection Agency, Guidelines for Exposure assessment, 1992, 126 p.

[6] Vincent, R., Bonthoux, F., Mallet, G., Iparraguirre, J.-F., Rio, S., Simplified methodology for chemical risk assessment: a decision making tool, 2005, Hygiène et sécurité du travail – Cahiers de notes documentaries, INRS.

[7] Udo de Haes, H.A., Finnveden, G., Goedkkoop, M., Hauschild, M., et al., Life-cycle impact assessment: striving towards best practice, 2002, Society of Environmental Toxicology and Chemistry.

[8] Dreyer, L.C., Niemann, A.L., Hauschild, M.Z., Comparison of three Different LCIA Methods: EDIP97, CML2001 and Eco-indicator 99, International Journal of Life cycle Assessment, 4/ 191-200

[9] Boize, M., Borie, A.-L., Landrin, A., Papadopoulo, M., Le Boulch, D., Richard, R., Relevance of Life Cycle

analysis (LCA) for assessing health impacts: Comparison with quantitative health risk assessment (QHRA), 2008, Environnement Risques et Santé, vol 7, nº4, pp 265-277.

[10] Olsen, S.I., Christensen, F.M., Hauschild, M., Life cycle impact and risk assessment of chemicals –a methodological comparison, 2001, Environmental Impact Assessment Review, 21/385-404.