HAL open science

# Study of a polar $\Delta\Sigma$ transmitter associated to a high efficiency switched mode amplifier for mobile Wimax.

Fabien Robert, Martha Suarez, Antoine Diet, Martine Villegas, Geneviève Baudoin

**To cite this version:**

Fabien Robert, Martha Suarez, Antoine Diet, Martine Villegas, Geneviève Baudoin. Study of a polar $\Delta\Sigma$ transmitter associated to a high efficiency switched mode amplifier for mobile Wimax.. 10th annual IEEE Wireless and Microwave Technology Conference, WAMICON, Apr 2009, Clearwater, United States. pp.T#2. hal-00445989

**HAL Id: hal-00445989**

**https://hal.science/hal-00445989v1**

Submitted on 11 Jan 2010

**HAL** is a multi-disciplinary open access archive for the deposit and dissemination of scientific research documents, whether they are published or not. The documents may come from teaching and research institutions in France or abroad, or from public or private research centers.

L'archive ouverte pluridisciplinaire **HAL**, est destinée au dépôt et à la diffusion de documents scientifiques de niveau recherche, publiés ou non, émanant des établissements d'enseignement et de recherche français ou étrangers, des laboratoires publics ou privés.

# Study of a Polar Sigma-Delta Transmitter associated to a High Efficiency Switched Mode Power Amplifier for Mobile WiMax

Fabien Robert[1], Martha L. Suárez P.[1], Antoine Diet[2], Martine Villegas[1] and Geneviève Baudoin[1]

[1]Université Paris-Est, ESYCOM, EA 2552, ESIEE BP 99, Noisy-Le-Grand 93162 Cedex, France
[2] DRÉ-L2S (UMR 8506 UPS-11, CNRS, Supélec). Supélec, F-91192 Gif s/ Yvette, France

***Abstract* — This paper presents the analysis and simulation of a high efficiency transmitter combining a polar sigma-delta modulator and a high efficiency amplifier. This study is carried out considering high PAPR (Peak to Average Power Ratio) mobile WiMax signals. Due to its high efficiency, the Class E amplifier was chosen. Performances and behavior of the designed amplifier were validated through simulations. In a second step the amplifier was associated to the polar transmitter to analyze the overall performances. Results confirm the challenges of transmitting high PAPR signals. Perspectives encourage the possibilities of providing efficient power amplification using a polar ΣΔ architecture.**

***Index Terms* — Sigma-Delta, WiMax, Polar architecture, Class E.**

## I. Polar ΣΔ Transmitter Architecture for WiMax

Some modulation techniques such as OFDM imply high PAPR. In homodyne and heterodyne radio architectures linear backed-off power amplifier are typically used but provide low drain efficiency. Transmitting non constant envelope signals by these architectures leads to system power efficiency reduction. Linearization methods or linear non-constant envelope architectures able to transmit high PAPR signals must be designed. In this frame, polar architectures based on the use of switched high efficiency amplifiers are particularly interesting. 100% efficiency in switching PA is theoretically possible due to the transistor switching at the fundamental frequency. This must be matched in the case of a modulated signal. Sometimes the useful information is only a part of the spectrum but is kept in a constant envelope shape, like in the polar ΣΔ transmitter architecture proposed in [1] which output varies between "+/– a" (Fig. 1).

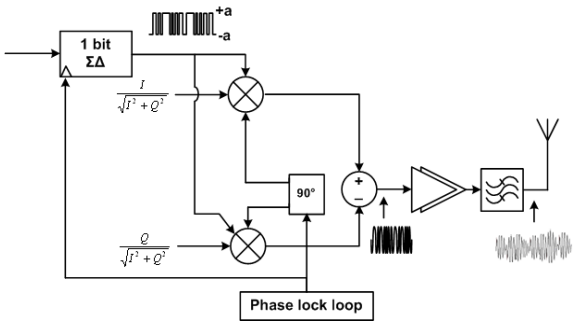


Fig. 1. Polar Sigma Delta transmitter architecture [2].

In a polar ΣΔ architecture, data are mapped and treated in baseband. Envelope is modulated by a low-pass ΣΔ modulator. Therefore resulting signal has constant envelope, which leads to a reduction of the PAPR, avoiding distortions at the amplifier. ΣΔ modulated envelope and phase signals are recombined and RF modulated before amplification. The signal still has constant envelope and linearity requirements are relaxed. A polar ΣΔ transmitter has been considered and validated for mobile WiMax standard [2], at a carrier frequency of 3.7GHz. From WiMax forum implementation profiles, simulations parameters were fixed as: 10 MHz channel, 841 used subcarriers (1024 FFT size), 28/25 as sampling factor (n) and 1/32 as cyclic prefix to useful time ratio (G). Raw symbol rate is calculated from precedent values using a 64-QAM modulation to achieve the highest PAPR. Obtained symbol rate is 9.079 Msymb/s. An order 2 lowpass ΣΔ modulator with an over sampling ratio (OSR) of 20 was used for simulations [2].

## II. Switched Mode PA

Since the polar ΣΔ architecture provides a constant envelope signal, switched mode power amplifier (SMPA) topology has been chosen for efficiency improvement. There are different classes of SMPAs (D,S,E and F), based on different transistor behavior and reactive elements of the load network [3-4-5]. Class D and S are used in pulsed and lowpass applications like audio, and don't provide a bandpass filtering of the signal as needed in wireless communications. Class E and F are suitable for RF applications. Class F PA is based on several resonating networks with high Q factors which are difficult to implement. Class E PA, uses an inductor and a shunt capacitor to balance the parasitic output capacitance of the transistor. The topology used to design the amplifier is described below (Fig. 2) [3].

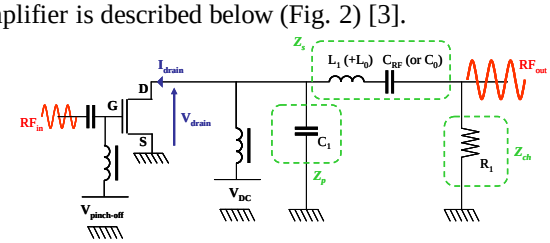


Fig. 2. Serial inductor topology of a Class E amplifier

A high efficiency PA is based on maximum voltage at zero current and vice versa, without any DC power dissipation. Therefore, it's possible to calculate the optimum value of Class E output network elements. In this case, the output of the transistor is supposed to be a short or an open circuit and the quality factor (Q) of C0-L0 is considered as infinite (perfect filtering conditions). In the signal provided by the polar ΣΔ architecture, information appears around the fundamental frequency and most of the power is spread over a wide spectrum including the two first lobes. A finite value of Q (Q=8) guarantees good switching conditions [4]. The load has been set to 50 Ω (Rload) considering emission filter and antennas as ideal. It should provide 22dBm output power with a drain biasing voltage of 3V. The calculation for Class E network components is:

$$C_0 = \frac{1}{(Q - 1.15249) \times Rload \times \omega_0}, \quad L_0 = \frac{1}{C_0 \omega_0^2} \tag{1}$$

$$C_{shunt} = \frac{0.1836}{Rload \times \omega_0} - C_{DS} \tag{2}$$

$$L_{serial} = \frac{Rload \times 1.15249}{\omega_0} \tag{3}$$

In this study we use a GaAs E-PHEMT,ATF50189. The model introduces a serial resistance $R_{DS}$ in parallel with the parasitic capacitor $C_{DS}$ at the "on" state of the switch. At the "off" state, the transistor may be considered as $C_{DS}$ for simplicity. One of the most valuable particularities in this paper is when in (2), $C_{shunt}$ is calculated considering that it would balance $C_{DS}$ value. The class E amplifier has been designed to work at 3.7 GHz. Input matching network has been designed keeping in mind that it should not filter the wide spectrum signal provided by the architecture. The goal is to preserve constant envelope property while mainly amplifying the information. The designed amplifier offers a drain efficiency (η) of 86.4%, an overall efficiency ($\eta_0$) of 79.2% and 10,1dB gain as the input is an 8 dBm 1-tone signal. With a square signal at the same input power, the result is equivalent in terms of gain. η and $\eta_0$ are 82% and 75.7% respectively.

## III. THE AMPLIFIER ASSOCIATED TO THE ARCHITECTURE

The signal provided to the amplifier is an 8dBm constant envelope signal. First results show the filtering behaviour of the amplifier. For Q=8, looking all over the output spectrum, the overall gain is 2dB (Fig.3) whereas looking in 20MHz bandwidth around the carrier shows a 8.3dB gain. The signal shows a higher amplification factor close to the carrier frequency than everywhere in the spectrum, due to the Class-E output network. Fig. 3 presents the PA output power spectrum considering a Q factor of 8.

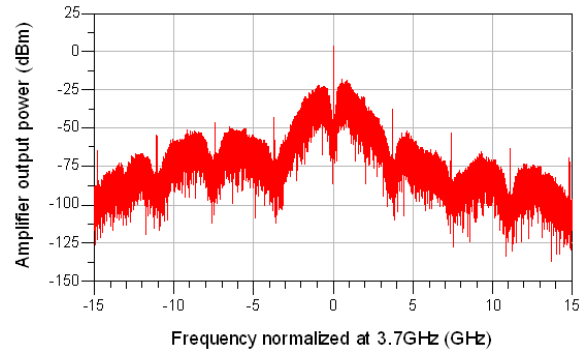


Fig. 3. Class-E PA output power spectrum

In this configuration η decreases to 35.4%. The output network was designed setting Q=8. Considering that 92 % of the power appears in the two first side lobes due to ΣΔ noise shaping, it was interesting to reduce Q. At Q =5, better results were obtained. New η obtained is 46.2% and $\eta_0$ reaches 36.8%. Overall gain increased to 3.15dB. η has been increased by 11%. Depending on the ΣΔ coding and the spectrum power density, it exists an optimal Q which guaranties a fully class E behaviour.

## V. CONCLUSION

This paper shows performance obtained by the polar architecture associated to a high efficiency amplifier. A PA has been designed resulting in η=86% for a 1-ton signal. Moreover, the efficiency of the same amplifier combined to the ΣΔ polar architecture is 46.2%, when amplifying a mobile WiMax 30dB PAPR signal (1024 carrier OFDM). These results point out one of the challenges in the design of such a transceiver but also for others universal architectures. The perspective shows the need of a co-design of both the amplifier and the filter.

## REFERENCES


[1] I. Hibon and al. Linear transmitter architecture using a 1-bit ΔΣ, European Microwave Week 2005, *Proc. Conf. ECWT*, pp. 321-324.

[2] L. Andia Montes, ML Suarez Penaloza, G. Baudoin, M Villegas. Specifications of a Polar ΣΔ Mobile Multi-Radio Transmitter – Validation on IEEE 802.16e. *IEEE RWS Conference Proc., 2008*.

[3] N. Sokal, A. Sokal. Class E, A new Class of high efficiency Tuned single ended switching PAs. *IEEE journal of Solid State Circuits, Vol. 10, No. 3, Juin 1975, pp 168-176*.

[4] F. Raab. Idealised operation of the class E tuned PA. *IEEE trans. on Circuits and Systems, Vol. 24, No. 12, 1977, pp 725-735*.

[5] A. Grebennikov. Class E HPAs : Historical aspects and Future prospects. *Applied Microwave and Wireless n°7 2002, pp 64-71*.