HAL
open science

Back-action amplification and quantum limits in optomechanical measurements

P. Verlot, A. Tavernarakis, T. Briant, P. -F. Cohadon, A. Heidmann

To cite this version:

P. Verlot, A. Tavernarakis, T. Briant, P. -F. Cohadon, A. Heidmann. Back-action amplification and quantum limits in optomechanical measurements. Physical Review Letters, 2010, 104, pp.133602. 10.1103/PhysRevLett.104.133602 . hal-00442350

HAL Id: hal-00442350

https://hal.science/hal-00442350v1

Submitted on 20 Dec 2009

HAL is a multi-disciplinary open access archive for the deposit and dissemination of scientific research documents, whether they are published or not. The documents may come from teaching and research institutions in France or abroad, or from public or private research centers.

L'archive ouverte pluridisciplinaire **HAL**, est destinée au dépôt et à la diffusion de documents scientifiques de niveau recherche, publiés ou non, émanant des établissements d'enseignement et de recherche français ou étrangers, des laboratoires publics ou privés.

Back-action amplification and quantum limits in optomechanical measurements

P. Verlot, A. Tavernarakis, T. Briant, P.-F. Cohadon, and A. Heidmann
Laboratoire Kastler Brossel, ENS, UPMC, CNRS; case 74, 4 place Jussieu, 75005 Paris, France

Optical interferometry is by far the most sensitive displacement measurement technique available, with sensitivities at the $10^{-20}\,\mathrm{m}/\sqrt{\mathrm{Hz}}$ level in the large-scale gravitational-wave interferometers currently in operation. Second generation interferometers will experience a 10-fold improvement in sensitivity and be mainly limited by quantum noise, close to the Standard Quantum Limit (SQL), once considered as the ultimate displacement sensitivity achievable by interferometry. In this Letter, we experimentally demonstrate one of the techniques envisioned to go beyond the SQL: amplification of a signal by radiation-pressure back-action in a detuned cavity.

PACS numbers: 42.50.Wk, 04.80.Nn, 03.65.Ta

Gravitational-wave (GW) astronomy [1, 2] is no longer the sole field of application of high-sensitivity interferometric displacement measurements, now at work as well in condensed-matter experiments such as single-spin magnetic resonance force microscopy [3], persistent-current detection in superconductors [4], or the quest to quantum effects in mesoscopic mechanical systems [5, 6]. Recent developments have led both future advanced GW interferometers [7, 8] and current micro-optomechanical systems [9, 10, 11] close to the Standard Quantum Limit (SQL) [12, 13, 14], where quantum fluctuations of radiation pressure have observable back-action effects upon the moving mirror and the measurement sensitivity.

Quantum effects of radiation pressure are so weak that they haven't been experimentally demonstrated yet, though a number of dedicated experiments are getting closer, either by a combination of high optical power and ultra low-mass mirrors [15] or by a careful examination of optomechanical correlations between two light beams sent into the same moving mirror cavity [16]. As future experiments will be confronted with the SQL, a number of schemes have been devised to go beyond it, either by sending squeezed light into the moving mirror cavity [13, 17] or by performing a back-action evading measurement [18] with a two-tone drive of the optomechanical cavity.

Another approach takes advantage of the radiation-pressure back-action in a moving mirror cavity: for a non-zero cavity detuning, a small cavity-length variation induces an intracavity radiation-pressure modulation which drives the mirror into motion. This may amplify the signal and lead to a sensitivity beyond the SQL, either in signal-recycled GW interferometers [19, 20] or in a single detuned optical cavity [21]. In this Letter, we report the observation of such an amplification effect by radiation-pressure back-action and we demonstrate its ability to improve the sensitivity beyond the SQL.

We consider a single-port cavity of length L with a fixed, partially transmitting front mirror, and a moving, perfectly reflecting end mirror (see fig. 1). The signal X_{sig} is a cavity-length modulation which is superimposed to the mirror displacement noise X_{m}, leading to a variable cavity detuning $\psi \equiv 2kL[2\pi]$ given by

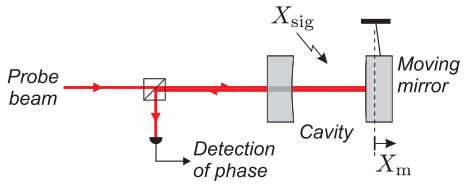

FIG. 1: Optical measurement of a cavity length variation X_{sig} through the phase of the reflected beam. Displacements X_{m} of the moving mirror limit the sensitivity.

$$\psi(t) = \overline{\psi} + 2k\left(X_{\mathrm{m}}(t) + X_{\mathrm{sig}}(t)\right), \tag{1}$$

where k is the field wavevector and $\overline{\psi}$ the mean detuning. Incident, intracavity and reflected fields obey the usual Fabry-Perot cavity relations except for the time dependence of the cavity detuning ψ. In Fourier space, one then gets linearized input-output relations for the respective annihilation operators $a^{\mathrm{in}}[\Omega]$, $a[\Omega]$, $a^{\mathrm{out}}[\Omega]$ of these fields at frequency Ω,

$$(\gamma - i\overline{\psi} - i\Omega\tau)a[\Omega] = \sqrt{2\gamma}a^{\mathrm{in}}[\Omega] + i\overline{a}\psi[\Omega], \tag{2}$$

$$a^{\mathrm{out}}[\Omega] = -a^{\mathrm{in}}[\Omega] + \sqrt{2\gamma}a[\Omega], \tag{3}$$

where γ is the damping rate of the cavity, assumed to be small compared to unity, and τ is the cavity storage time.

According to (1) and (2) the dynamics of the intracavity field are equally sensitive to the signal $X_{\mathrm{sig}}[\Omega]$ and to the mirror displacements $X_{\mathrm{m}}[\Omega]$. The outgoing field [eq. (3)] then reflects both the signal and mirror displacement noise, including radiation-pressure noise.

The radiation-pressure force $F_{\mathrm{rad}} = 2\hbar k I$ is proportional to the intracavity intensity $I = a^{\dagger}a$. From (1) and (2), it can be written as the sum of three terms [21]: the first one related to the incident field fluctuations $a^{\mathrm{in}}[\Omega]$ corresponds to radiation-pressure quantum noise, the two others related to X_{m} and X_{sig} are given by

$$F_{\mathrm{rad}}^{(\mathrm{m})}[\Omega] = -8\hbar k^2 \overline{I}\frac{\overline{\psi}}{\Delta}X_{\mathrm{m}}[\Omega], \tag{4}$$

$$F_{\mathrm{rad}}^{(\mathrm{sig})}[\Omega] = -8\hbar k^2 \overline{I}\frac{\overline{\psi}}{\Delta}X_{\mathrm{sig}}[\Omega], \tag{5}$$

where $\Delta = (\gamma - i\Omega\tau)^2 + \overline{\psi}^2$ and $\overline{I} = |\overline{a}|^2$ is the mean intensity. The force $F_{\rm rad}^{(\rm m)}$ corresponds to the dynamical back-action which changes the mechanical response of the mirror, its mechanical susceptibility χ being modified to an effective susceptibility $\chi_{\rm eff}$ given by

$$\chi_{\rm eff}^{-1}[\Omega] = \chi^{-1}[\Omega] + 8\hbar k^2 \overline{I}\frac{\overline{\psi}}{\Delta}. \tag{6}$$

This force thus leads to additional optical spring and damping on the mirror in a detuned cavity ($\overline{\psi} \neq 0$), and is responsible for the radiation-pressure cooling of the mirror in a red-detuned cavity [22, 23, 24, 25].

The force of interest in this paper is $F_{\rm rad}^{(\rm sig)}$: according to (5) and (6), it induces a mirror displacement $X_{\rm m}^{(\rm sig)} = \chi_{\rm eff} F_{\rm rad}^{(\rm sig)}$ proportional to the signal $X_{\rm sig}$, leading to a total length variation,

$$X_{\rm m}^{(\rm sig)}[\Omega] + X_{\rm sig}[\Omega] = \frac{\chi_{\rm eff}[\Omega]}{\chi[\Omega]} X_{\rm sig}[\Omega]. \tag{7}$$

Depending on the ratio between the initial and effective susceptibilities, one then gets either an amplification or a deamplification of the signal by the mirror motion.

We now derive the phase of the field reflected by the cavity, using the usual definition of the phase quadrature $q[\Omega]$ for any field operator a,

$$|\overline{a}|\, q[\Omega] = i\left(\overline{a} a^\dagger[\Omega] - \overline{a}^\star a[\Omega]\right). \tag{8}$$

Assuming for simplicity that frequencies Ω of interest are much smaller than the cavity bandwidth $\Omega_{\rm cav} = \gamma/\tau$, equations (2) and (3) show that the phase $q^{\rm out}$ of the reflected field simply reproduces the cavity length variations $X_{\rm m} + X_{\rm sig}$ (including radiation-pressure noise), with an additional noise term related to the incident phase fluctuations $q^{\rm in}$,

$$q^{\rm out}[\Omega] = q^{\rm in}[\Omega] + 2\xi\left(X_{\rm m}[\Omega] + X_{\rm sig}[\Omega]\right), \tag{9}$$

where $\xi = 4k\gamma\left|\overline{a}^{\rm in}\right| / \left(\gamma^2 + \overline{\psi}^2\right)$. One finally gets the spectrum $S_q^{\rm out}[\Omega]$ of the measured phase quadrature as

$$\frac{S_q^{\rm out}}{4\xi^2} = \frac{1}{4\xi^2} + \hbar^2\xi^2\left|\chi_{\rm eff}\right|^2 + \left|\frac{\chi_{\rm eff}}{\chi}\right|^2 S_x^{\rm sig}, \tag{10}$$

where $S_x^{\rm sig}[\Omega]$ is the spectrum of the signal $X_{\rm sig}$. First two terms in eq. (10) are the usual quantum shot and radiation-pressure noises: they exactly correspond to the ones obtained for a resonant cavity with a mirror having a mechanical susceptibility $\chi_{\rm eff}$. Their sum can be rewritten as $|\hbar\chi_{\rm eff}|\,\frac{\zeta^{-1}+\zeta}{2}$, which only depends on the dimensionless optomechanical parameter $\zeta = 2\hbar\xi^2|\chi_{\rm eff}|$. At any frequency Ω, the sum is minimal and equal to the standard quantum limit $|\hbar\chi_{\rm eff}[\Omega]|$ when $\zeta[\Omega] = 1$.

Last term in eq. (10) reflects the signal, but with an amplification factor $|\chi_{\rm eff}/\chi|^2$ similar to the one already found in eq. (7). In absence of dynamical radiation-pressure effects ($X_{\rm m}^{(\rm sig)} = 0$) as in the case of a resonant cavity, this factor simply disappears and the second term in eq. (10) reduces to $S_x^{\rm sig}$. It is then clear that dynamical back-action not only does change the mechanical behavior of the moving mirror from χ to $\chi_{\rm eff}$, but also enables an amplification of the signal proportional to the factor $|\chi_{\rm eff}/\chi|^2$. Equation (10) therefore shows that a high amplification factor together with an optomechanical parameter $\zeta \simeq 1$ may afford a significant increase of the measurement sensitivity beyond the SQL $|\hbar\chi_{\rm eff}|$.

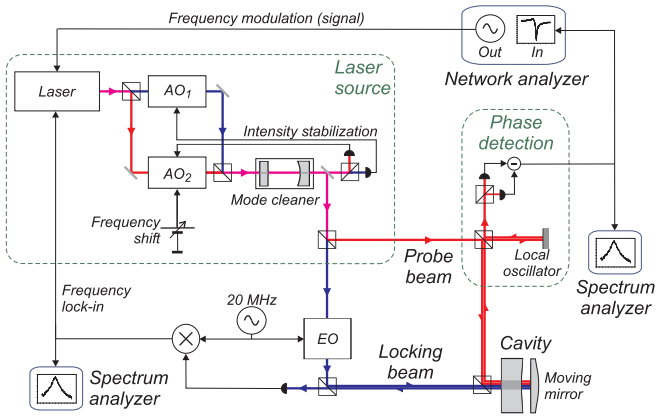

FIG. 2: Experimental setup. A laser source provides two beams, a locking beam used to set the laser frequency at the optical resonance of the cavity via a Pound-Drever-Hall technique, and a probe beam which can be detuned by an acousto-optic modulator (AO). The measured signal is provided by a network analyzer which modulates the laser frequency to induce an optical length modulation of the cavity. The phase of the reflected probe beam is monitored with a homodyne detection and the result is sent both to the network analyzer and to a spectrum analyzer. For simplicity, most polarizing elements are not shown.

Our experimental setup (figure 2) is based on a single-ended optical cavity, with a 1-inch fused silica cylindrical input mirror. The end mirror is coated on a plano-convex 34-mm diameter and 2.5-mm thick substrate, which exhibits gaussian internal vibration modes [26]. In the following we only consider frequencies Ω close to a single mechanical resonance of this moving mirror, so that its motion can be considered as the one of a harmonic oscillator characterized by a lorentzian susceptibility,

$$\chi[\Omega] = \frac{1}{M\left(\Omega_{\rm M}^2 - \Omega^2 - i\Omega_{\rm M}\Omega/Q\right)}, \tag{11}$$

with the following characteristics, deduced from the thermal noise spectrum observed at room temperature: resonance frequency $\Omega_{\rm M}/2\pi \simeq 1128.5\,$kHz, mass $M = 72\,$mg, and quality factor $Q = 760\,000$.

The cavity finesse is $\mathcal{F} = \pi/\gamma = 110\,000$, mainly limited by the losses and transmission of the input mirror. We use a 500-μm long cavity in order to keep a sufficient cavity bandwidth ($\Omega_{\rm cav}/2\pi = 1.4\,$MHz) and to prevent

laser frequency noise from limiting the displacement sensitivity. The cavity is operated in vacuum to increase the mechanical quality factor.

A Ti:Sa laser working at 810 nm provides two cross-polarized beams used to lock and to probe the cavity. Two acousto-optic modulators (AO in Fig. 2) enable to detune one beam with respect to the other. The overall resonance is controlled by locking the laser frequency via a Pound-Drever-Hall technique: the low-power (200 μW) locking beam is phase-modulated at 20 MHz by a resonant electro-optical modulator (EO), and the resulting intensity modulation of the reflected beam provides the error signal. The more intense ($P^{\rm in} \simeq 4$ mW) probe beam can then be arbitrarily detuned from the cavity resonance by using the frequency shift of the AO modulator. A mode cleaner filters the spatial profile of both beams, while their intensities are stabilized by a servo-loop which drives the amplitude control of the AO modulators.

The signal $X_{\rm sig}$ is a modulation of the optical cavity length, obtained through a modulation of the laser frequency [27] via an electro-optical modulator inserted inside the laser. The phase $q^{\rm out}$ of the reflected probe beam is monitored by a homodyne detection, with a local oscillator derived from the incident beam and phase-locked in order to detect the phase quadrature.

We first select the detuning of the probe beam with respect to the cavity resonance, and we monitor the mirror thermal noise by sending the homodyne detection signal to a spectrum analyzer. This step allows one to determine the effective mechanical response $\chi_{\rm eff}$ induced by dynamical back-action. Then, using a network analyzer, the modulation of the laser frequency is turned on and swept around the mirror mechanical resonance. The modulation power is set about 25 dB above the thermal noise at the mechanical resonance so that thermal noise can be neglected. The resulting phase modulation of the reflected probe beam is monitored by the network analyzer. We finally turn the probe beam off, and we measure the mirror thermal noise immediately after, using the Pound-Drever-Hall signal. This last step is essential in order to accurately determine the intrinsic mechanical response χ of the moving mirror (obtained with the locking beam at resonance), which may be slightly frequency shifted from one measurement to the other due to slow thermal drifts -typically 0.1 Hz per minute.

We present in fig. 3 the resulting phase modulation power $S_q^{\rm out}$ measured by the network analyzer when the signal modulation $X_{\rm sig}$ is swept around the mechanical resonance frequency $\Omega_{\rm M}$. Curves a to d, obtained for various negative detunings $\overline{\psi}$, are normalized to the phase modulation obtained far from the mechanical resonance (measured 1 kHz above $\Omega_{\rm M}$). They thus represent the amplification factor $|\chi_{\rm eff}/\chi|^2$ appearing in eq. (10), as can be seen from the inset which compares the experimental result to the expected amplification factor deduced from the measured susceptibilities $\chi_{\rm eff}$ and χ.

A clear amplification is observed near the effective mechanical resonance of $\chi_{\rm eff}$, which is down-shifted from $\Omega_{\rm M}$

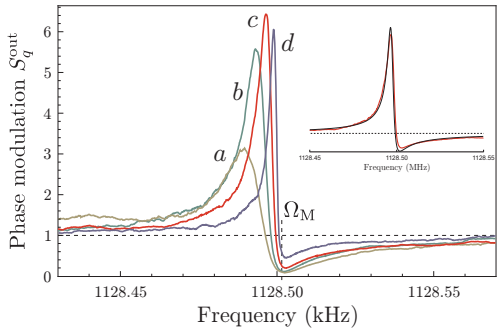

FIG. 3: Phase modulation power $S_q^{\rm out}$ measured by the network analyzer in response to a signal modulation swept around the mechanical resonance frequency $\Omega_{\rm M}$. Curves a to d correspond to different negative detunings, $\overline{\psi}/\gamma = -1.87$, -2.03, -2.97, and -3.64, respectively. The inset shows a fit of curve c by the amplification factor $|\chi_{\rm eff}/\chi|^2$ deduced from the measured susceptibilities $\chi_{\rm eff}$ and χ.

as expected from eq. (6), whereas one gets an attenuation at the mechanical resonance $\Omega_{\rm M}$ where χ is maximum. Note that similar results are obtained for positive cavity detunings, corresponding to the amplification regime of the mirror-cavity system rather than to the cooling one, but the proximity of the parametric instability [22] makes the results less reproducible. Nevertheless, we have obtained a very large signal amplification effect, with an amplification factor larger than 6 for curve c: back-action effects induce a motion $X_{\rm m}^{\rm (sig)}$ of the mirror in phase with the signal $X_{\rm sig}$, with an amplitude larger than the signal itself.

Such an amplification leads to an improvement of the sensitivity beyond the standard quantum limit. Although quantum noises are not directly observed in our experiment for which the sensitivity is currently limited by the mirror thermal noise, the sensitivity improvement can be computed using eq. (10) and the experimental radiation-pressure amplification results. Since the resonance frequency $\Omega_{\rm M}$ is on the same order as the cavity bandwidth $\Omega_{\rm cav}$, finite bandwidth effects have to be included. This amounts to modify eq. (10) as follows,

$$\frac{|u|^2 S_q^{\rm out}}{4\xi^2} = |\hbar\chi_{\rm eff}|\left(\frac{\zeta^{-1}+\zeta}{2} + |v|^2\frac{\zeta}{2} + {\rm Im}\left[v^\star\frac{\chi_{\rm eff}}{|\chi_{\rm eff}|}\right]\right) + \left|\frac{\chi_{\rm eff}}{\chi}\right|^2 S_x^{\rm sig}, \quad (12)$$

where the optomechanical parameter now reads $\zeta = 2\hbar\xi^2|\chi_{\rm eff}|/|u|^2$, and the dimensionless parameters u and v only depend on optical parameters,

$$u = \frac{\Delta}{\gamma^2 + \overline{\psi}^2 - i\gamma\Omega\tau}, \quad v = \frac{\Omega}{\Omega_{\rm cav}}\frac{\gamma\overline{\psi}}{\Delta}u. \quad (13)$$

Radiation-pressure amplification is unaltered by finite-bandwidth effects [second line in eq. (12)], and only quantum noises are modified (first line), including in par-

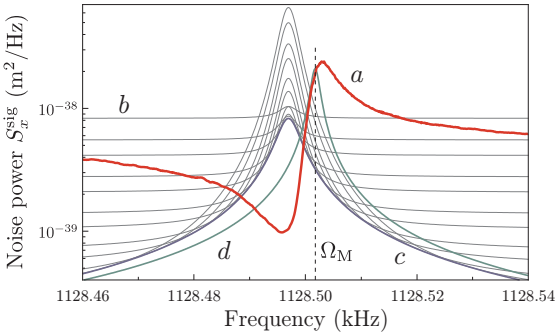

FIG. 4: Expected quantum-limited sensitivity of the measurement expressed as the equivalent signal noise spectrum $S_x^{\rm sig}$. Curve a is deduced from the signal amplification observed at a detuning $\overline{\psi}/\gamma = -2.97$. Curves b correspond to a resonant cavity with a resonator of susceptibility $\chi_{\rm eff}$, for increasing powers. Curves c and d are the standard quantum limits for a resonator of susceptibility $\chi_{\rm eff}$ and χ, respectively.

ticular the possibility to squeeze the field by radiation-pressure effects. In the conditions of our experiment, corrections however do not exceed 1 dB at frequencies for which the amplification factor is larger than 1. Large sensitivity improvements can thus be fully attributed to signal amplification.

Figure 4 shows the sensitivity of the measurement defined as the equivalent signal noise spectrum $S_x^{\rm sig}[\Omega]$ that gives a signal-to-noise ratio equal to 1. Without radiation-pressure amplification, that is for a resonant cavity with a mirror of susceptibility $\chi_{\rm eff}$, it simply corresponds to the quantum noise spectrum given by the first line in eq. (12). As shown by the series of curves b, a flat sensitivity profile is obtained at low input power where radiation-pressure effects are negligible over the whole frequency band. As the input power increases, the shot-noise limited sensitivity is improved away from the mechanical resonance, at the expense of larger radiation-pressure effects close to the resonance. Sensitivity is in any case limited by the standard quantum limit $|\hbar\chi_{\rm eff}|$ shown as curve c.

In contrast, the sensitivity in presence of signal amplification corresponds to the quantum noise spectrum [first line in eq. (12)] divided by the amplification factor $|\chi_{\rm eff}/\chi|^2$: curve a shows the resulting sensitivity, each parameter involved in eq. (12) being experimentally determined. Sensitivity is improved beyond the SQL by more than 9 dB for frequencies close to the effective mechanical resonance. It is also improved beyond the SQL $|\hbar\chi|$ of a resonator of susceptibility χ (curve d) by a factor larger than 5 dB.

We have experimentally demonstrated how one can use a detuned cavity to amplify an interferometric signal with the intracavity radiation pressure, and possibly beat the SQL. Using a fused silica moving mirror as end mirror of a high-finesse cavity, we have achieved a 6-fold amplification of the signal by radiation-pressure back-action. The corresponding quantum-limited sensitivity would be lower than the SQL for frequencies around the effective mechanical resonance frequency of the moving mirror. A similar effect is expected in second-generation GW interferometers to create a dip in the sensitivity curve and will be used to tune the sensitivity at a specific frequency.

This work was partially funded by the FP7 Specific Targeted Research Project Minos.

[1] C. Bradaschia *et al.*, Nucl. Instrum. Meth. A **289**, 518 (1990).
[2] A. Abramovici *et al.*, Science **256**, 325 (1992).
[3] D. Rugar, R. Budakian, H.J. Mamin, and B.W. Chui, Nature (London) **430**, 329 (2004).
[4] A.C. Bleszynski-Jayich *et al.*, Science **326**, 272 (2009).
[5] M.D. LaHaye, O. Buu, B. Camarota, and K.C. Schwab, Science **304**, 74 (2004).
[6] C.A. Regal, J.D. Teufel, and K.W. Lehnert, Nat. Phys. **4**, 555 (2008).
[7] P. Fritschel, Proc. SPIE **4856**, 282 (2003).
[8] The Advanced Virgo Team, Advanced Virgo Preliminary Design, Virgo Internal Report VIR-089A-08 (2009)
[9] A. Schliesser, O. Arcizet, R. Rivière, G. Anetsberger, and T.J. Kippenberg, Nat. Phys. **5**, 509 (2009).
[10] J.D. Teufel, T. Donner, M.A. Castellanos-Beltran, J.W. Harlow, and K.W. Lehnert, Nat. Nano. **4**, 820 (2009)
[11] G. Anetsberger *et al.*, Nat. Phys. **5**, 909 (2009).
[12] C.M. Caves, Phys. Rev. D **23**, 1693 (1981).
[13] M.T. Jaekel and S. Reynaud, Europhys. Lett. **13**, 301 (1990).
[14] V.B. Braginsky and F. Ya Khalili, *Quantum Measurement* (Cambridge University Press, 1992).
[15] K. Yamamoto *et al.*, arXiv:0912.2603
[16] P. Verlot, A. Tavernarakis, T. Briant, P.-F. Cohadon, and A. Heidmann, Phys. Rev. Lett. **102**, 103601 (2009).
[17] H.J. Kimble, Y. Levin, A.B. Matsko, K.S. Thorne, and S.P. Vyatchanin, Phys. Rev. D **65**, 022002 (2001).
[18] J.B. Hertzberg *et al.*, arXiv:0906.0967 (2009).
[19] A. Buonanno and Y. Chen, Phys. Rev. D **64**, 042006 (2001).
[20] A. Buonanno and Y. Chen, Phys. Rev. D **65**, 042001 (2002).
[21] O. Arcizet, T. Briant, A. Heidmann, and M. Pinard, Phys. Rev. A **73**, 033819 (2006).
[22] O. Arcizet, P.-F. Cohadon, T. Briant, M. Pinard, and A. Heidmann, Nature (London) **444**, 71 (2006).
[23] S. Gigan *et al.*, Nature (London) **444**, 67 (2006).
[24] J.D. Thompson *et al.*, Nature (London) **452**, 72 (2008).
[25] A. Schliesser, O. Rivière, G. Anetsberger, O. Arcizet, and T.J. Kippenberg, Nat. Phys. **4**, 415 (2008).
[26] T. Briant, P.-F. Cohadon, A. Heidmann, and M. Pinard, Phys. Rev. A **68**, 033823 (2003).
[27] T. Caniard, P. Verlot, T. Briant, P.-F. Cohadon, and A. Heidmann, Phys. Rev. Lett. **99**, 110801 (2007).