HAL
open science

# Exploitation of a displacement survey to detect road network use vulnerability

Michel Nabaa, Cyrille Bertelle, Antoine Dutot, Damien Olivier, Pascal Mallet

## To cite this version:

Michel Nabaa, Cyrille Bertelle, Antoine Dutot, Damien Olivier, Pascal Mallet. Exploitation of a displacement survey to detect road network use vulnerability. 3rd International Conference on Complex Systems and Applications (ICCSA'09), 2009, Le Havre, France. pp.151-155. hal-00430690

**HAL Id: hal-00430690**

**https://hal.science/hal-00430690v1**

Submitted on 9 Nov 2009

**HAL** is a multi-disciplinary open access archive for the deposit and dissemination of scientific research documents, whether they are published or not. The documents may come from teaching and research institutions in France or abroad, or from public or private research centers.

L'archive ouverte pluridisciplinaire **HAL**, est destinée au dépôt et à la diffusion de documents scientifiques de niveau recherche, publiés ou non, émanant des établissements d'enseignement et de recherche français ou étrangers, des laboratoires publics ou privés.

# Exploitation of a displacement survey to detect road network use vulnerability

Michel Nabaa, Cyrille Bertelle, Antoine Dutot, Damien Olivier
Université du Havre
LITIS
25, rue Phillipe Lebon
F-76085 Le Havre
{Michel.Nabaa; Cyrille.Bertelle; Antoine.Dutot; Damien.Olivier; }@univ-lehavre.fr
Patrick Lions
CODAH
19, Rue Georges Braque
F-76085 Le Havre
Patrick.Lions@agglo-havraise.fr

***Abstract*—Many agglomeration are faced to multiple technological and natural hazards. The use of the road network by vehicles may cause big problems especially under evacuation situations. An accident on a main road may endanger many lives. A household survey was conducted in CODAH [1]about people displacement in the seine estuary. In this paper, we extracted and treated the survey result. We also compared results with a detection of organizations in large graphs algorithm.**

***Index Terms*—vulnerability, risk, self organization, detection of organizations, GIS, household displacement survey.**

## I. Introduction

As many agglomerations, CODAH is faced to natural and technological hazards. 33 establishments are classified SEVESO[2] with high threshold. To minimize risk effects, we must localize the population at any time. In this context, the major risk management team (DIRM) of CODAH has developed a model to estimate the diurnal / nocturnal population distribution at buildings scale (PRET RESSE) [1]. This model does not take into account the population displacement on the road network. In previous works, we proposed an approach to dynamically assess the vulnerability related to the road network use by vehicles [2], [3]. To complete this work, we have exploited a household survey about the displacement of the population of CODAH in the Seine estuary. In this paper, we exploit the survey and we compute vehicles path declared displacements to dispatch the population on the network. We present also a detection of organizations on large graphs algorithm. The aim of this algorithm is to detect zones susceptible to be congested, this by taking into account the topological aspect of the graph. Finally, the results of the survey will be compared to those obtained from the algorithm.

[1]COmmunauté De l'Agglomération Havraise: it groups 17 communes including Le Havre. The goal is to to develop many common projects in territory management, health and hygiene, public transport, risk management...

[2]Directive SEVESO is an European directive, it lays down to the states to identify potential dangerous site. It intends to prevent major accidents involving dangerous substances and limit their consequences for man and the environment, with a view to ensuring high levels of protection throughout the Community.

## II. Risk management

Real exercises in an evacuation planning are so expensive (people, resources, logistics...) and sometimes not realistic : they can not take into account each individual behavior as the panic effect and initial response to an evacuation in a dangerous area. Panic generally results from the lack of coordination and dialog between individuals. Hence the use of the simulation and in particular Multi-Agent Systems (MAS) is necessary to model each agent behavior and more understand the evolution of a critical situation due to interactions between evacuees and the propagation of a danger : an accident on the road network may cause dangerous traffic jams especially in a case of a danger that spreads quickly. Once we understand the evolution of a critical situation, we try to fight against organizations of vehicles and try to allocate vehicles on different roads to avoid bottlenecks. Recently, many researchers tried to couple a MAS with a Geographical Information System (GIS), especially in risk management and vulnerability assessment. For computer modelers, this integration provides the ability to have agents linked to real geographical locations. For GIS users, it provides the ability to model the emergence of phenomena by various interactions of agents in time and space by using a GIS [4]. Thanks to a GIS, one can combine different vulnerability layers (a layer per danger : geophysical one, social one, access to the network...) to construct a global layer which leads to a better assessment of vulnerability; we think particularly about the work of [5]. In geography, the representation of a MAS coexists n levels of organizations and use several classes of agents (e.g. Level 1: individuals or companies, Level 2 and three: economic, urban communities).There will be rules at

every level and the approach is not necessarily a bottom up one as in the models of self-organization [6]. In [7], the author modeled the spread of the panic from a group of individuals in danger situation to non panicked ones. She used a dynamic system (differential equations) to simulate the behavior of individuals. Many execution scenarios showed that the emergence of panic has not occurred in all scenarios when changing some parameters. The emergence depends on the rate of transmission from a population susceptible to panic to a panicked population , the time taken to return to a normal behavior (the population is more panicked after the disaster) and the number of initially panicked people. The principle of resilience was also discussed; it represents the time that the system makes to return to its initial state after a period of instability due to a disaster.

At neighborhood scale, many researches where developed models based on microsimulation. In their paper [8], the authors have presented a model to estimate the time required to evacuate a neighborhood according to the population, the number of vehicles and roads network capacity. The model is based on optimization in order to find the dangerous area around a critical point. This model was coupled with a GIS (ArcInfo) to visualize the results (identifying evacuation plans) and to establish an evacuation map for the town (Santa Barbara). The same authors [9] opened the way to the study based on geographic information systems to evacuate people. Their study identified communities that may face transportation difficulties during an evacuation. They modeled the city by a graph to estimate lanes (Lane) occupation by vehicles during an evacuation. A graph partitioning model was adopted in order to detect vulnerable neighborhoods around each node of the graph and to build a vulnerability map around the nodes of the graph. A constructive heuristic was used to calculate the best cluster around each node. The result was displayed on a map with ARCINFO GIS. An area is increasingly vulnerable according to the number of evacuees per lane (number of people to evacuate in a neighborhood / number of exit roads). The author believes that the combining of an evacuation based vulnerability layer and a hazard one allows to build a general risk map, so we can explore the various issues related to risk. However, in this approach, we predefine the maximum number of nodes in a neighborhood, which may not always be realistic and does not take into account the traffic evolution during evacuation. Secondly, the city of Santa Barbara is not a typical example of urban metropolitan areas in the United States with an important population facing great difficulties during a evacuation.

## III. Displacement Survey

Lifestyles and travel practices are changing. Traveled distances have increased. New infrastructures have been established and new services are proposed: these developments must meet the expectations and new patterns of migration of our territory inhabitants. That is why a household displacement survey was conducted, with a standard model developed by the Center for Studies on networks, transport, urban planning and public constructions (the CERTU). The survey will provide shared data on current displacement practices and their evolution.

### A. Survey utility

The last displacement survey occurred in 1992 at Le Havre agglomeration. Over time, taken paths become more complex and new infrastructures exist; hence the need to a displacement survey to respond to the population expectations, this by :

- considering the travel conditions between the city and its catchment area of life: people come from further far away to work, study or consume.
- Interview people about their expectations for transport.
- defining the transport policy of the CODAH for the coming years: how to increase the use of public transport, where and how to adapt the supply, how to relate the supply of transport lanes with the rest of the territory, what are the new flows, new trends, future developments areas of housing and economy ...
- promote environmental issues, defined in the law of Solidarity and Urban Renewal. Communities undertake increasingly the development of a sustainable mobility.

In this work, the main utility of the survey is to localize the population on the network at any time of the day. This will help us to detect the congested areas and to estimate the vulnerability related to the road network use by vehicles.

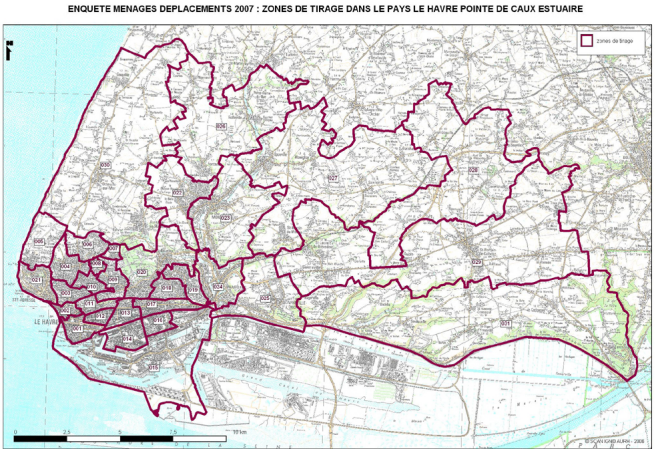


Fig. 1: zoning the Seine estuary communes

The territory of the survey covers the communities of the Seine estuary (CODAH, Saint Romain de Colbosc community) and Tancarville community or a territory of 34 communes. This territory was divided into 102 zones to meet the survey needs. Each surveyed person moves from a zone to the same or another zone. These zones are illustrated in figure1.

### B. Survey details

5194 persons representing 2224 households were surveyed from different zones of CODAH. After a generalization of the survey, we have around 320000 motorized displacements per day. The adopted model is illustrated in the following UML schema (figure 2).

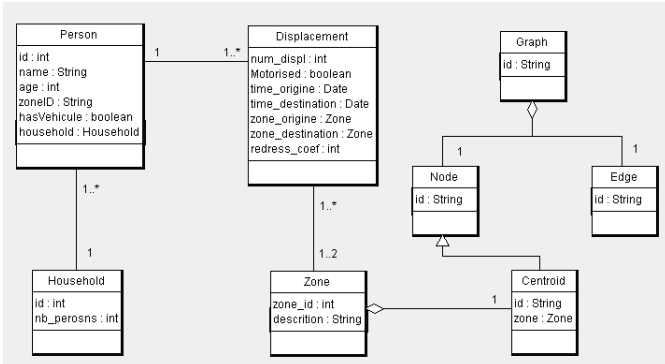


Fig. 2: UML schema

Each zone has at least a centroid which is a node strongly connected to other nodes. So each person declaring a displacement from a zone *Z1* to a zone *Z2* must move from a centroid of *Z1* to a centroid of *Z2*. The *redress_coef* attribute in the *Household* class represents the redress coefficient of the household. So, if a person *p* belonging to a household *h* having the redress coefficient *c* moves from a zone *a* at time *t1* to a zone *b* at time *t2*, we must generalize this by moving *c* persons from *a* to *b* at the same time. Must of people round up their time of departure and arrival. One declares leaving home at 08h00 while he did it at 07h56. This has caused a problem of routes saturation because of moving many vehicles from the same origin to the same destination, at the same time. To face this problem, we used a normal distribution around departure time while respecting the duration of a displacement declared by each person.

### C. Environment modeling

The road network is integrated as a layer in the Geographic Information System (GIS). From this layer, we extract the data by using the open source java GIS toolkit Geotools. This toolkit provides several methods to manipulate Geo spatial data and implements Open Geospatial Consortium (OGC) specifications, so we can read and write to ESRI shapefile format. Once data road network are extracted, we use the GraphStream tool [10] developed within LITIS laboratory of Le Havre to construct a graph corresponding to the GIS network layer. This tool is designed for modeling; processing and visualizing graphs.
The data extracted from network layer contains the roads circulation direction, roads id, roads type, their lengths and geometry.

The extracted multigraph $G = (V, E)$ represents the road network where $V$ is the set of nodes and $E$ the set of arcs. We deal with a multigraph because we have sometimes more than one oriented arc in the same direction between two adjacent nodes due to multiple routes between two points in the Seine Estuary road network. GraphStream facilitates this task because it is adapted to model and visualize multigraphs. In the constructed multigraph:

- The nodes represent roads intersections,
- The arcs represent the roads taken by vehicles,

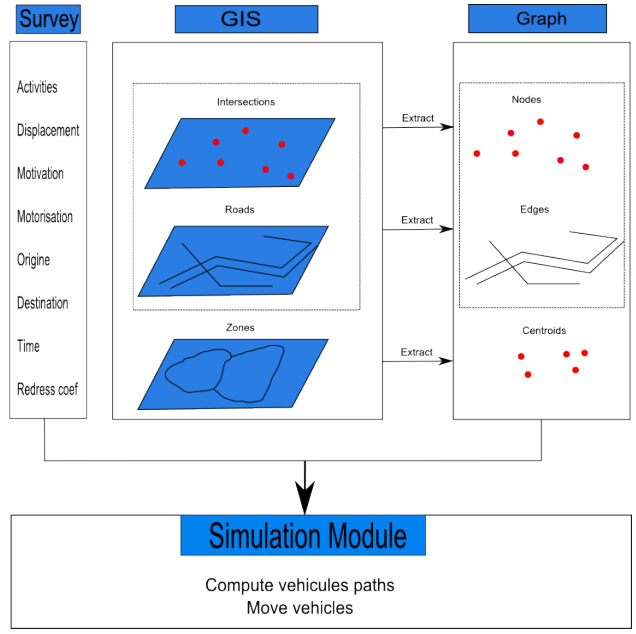


Fig. 3: Extract the graph and compute vehicles path

- The weight on each arc represents the needed time to cross this arc. Each arc has a maximum capacity of vehicles (*Arc length / Vehicle length*)

### D. Compute vehicles paths

In our work, we must repatriate people having their personal vehicle on the road network. The main goal is to detect routes with high vehicles density. It helps us in the detection of organizations and estimation of the vulnerability related to the road network using. Generally, people tend to choose the shortest path in time when using their own vehicles. This assumption, which may seem audacious and even unrealistic, however, is found in almost all mobility models implemented in most countries since 1960 [11]. For each person displacement from a centroid *c1* to a centroid *c2*, we compute the shortest path between the two nodes by using A-Star algorithm. It has the advantage to be fastest than Dijkstra algorithm when using an efficient heuristic. The last is an exact algorithm which compute the shortest path between a source node to all other nodes in a graph. In future work, we will use the dynamic version of A-Star (D-star) to avoid congested routes when computing paths. Another problem occurred when defining just one centroid per zone; obviously the must connected one. In figure 4, taken routes by vehicles are colored in red. At the left of the figure, we adopt one centroid per zone : we have 4772 taken routes and those routes are quickly congested. At the right, we used 15 centroids per zone to overcome this limitation : 17684 routes was taken. It is the maximum centroids number per zone if we use a machine having $2GO$ of ram. We can conclude that the more routes are taken and the less maximum roads capacity is violated.

Fig. 4: Taken routes with one centroid and 15 centroids per zone

## IV. Looking at often used paths in the city road network

We conducted a simple experiment using random walks inside the city road network, seen as a graph. In this experiment we take a given number of entities placed randomly on nodes of the city graph. Then we run an iterative loop where, at each step, these entities either traverse a randomly chosen edge or wait.

Each time an entity crosses an edge $e \in E$, a special variable $e_{np}$ (number of passes) bound to the edge is incremented. At the end of such a simulation, the number of passes on each edge by entities will therefore be stored in these variables.

The entities may either cross an edge or wait because the displacements must consider road traversing times. The time an entity waits is proportional to the average time used to travel on the corresponding road: for two edges of the same length, an entity will wait longer if the road is a city road than if it is an highway.

After an entity crossed an edge, it chooses the next edge to cross randomly, but do not consider any more the edge it came from. The edges the entity used are stored in a memory, and the entity tries to avoid reusing them. This memory is a FIFO stack and ultimately, roads in the memory are forgotten, so that the entity can reuse them later.

As the road graph we use is bounded, some roads on the border are cut. If an entity reaches such a dead end (or a real bag end), it "jumps" in another position in the graph, chosen randomly.

In the figure 5 we show one run of this experiment. We in fact did several runs with a varying random seed, and always obtained very similar results. Edges are colored using a color graduation going from blue (almost no pass) to red (a lot of passes) passing by green, yellow and orange. The scale is geometric. To pass from blue to green you have to double the number of passes, and to pass from green to yellow you anew have to double this number of passes.

There are as many entities as nodes in the network. After some setup, we set the entity memory to 40 nodes. We stop the algorithm when a given maximum number of passes is reached on one of the edges, here 4000. We chosen such a high number to ensure the exploration of entities is significant enough.

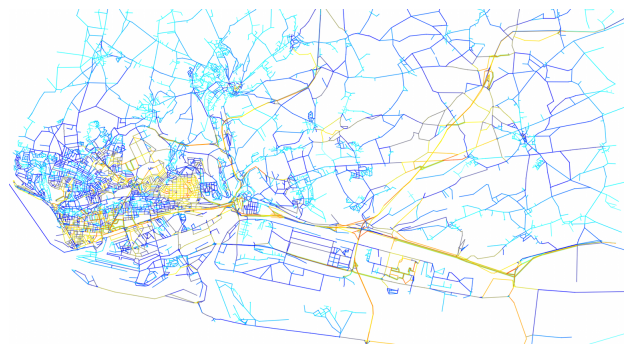

Fig. 5: Random walks in Le Havre, blueish to greenish roads are less used and yellowish to reddish roads are the more used.

For a better understanding, the same results are shown on figure 6 with labels that help to locate roads. The road that are highly used are labelled and highlighted. They correspond to town centers and highways. The A29 and A13 are the two main highways passing by and going to Le Havre. The road labelled "main city entry" is one of the most used road when coming to Le Havre (due to the fact the city is a harbour and have its south and west sides bordered by water, and at the north a plateau ("ville haute") with smaller accesses. The "Breque" label indicates a very large interchange that is, for the same reasons, one of the most used section of road when coming to and leaving Le Havre.

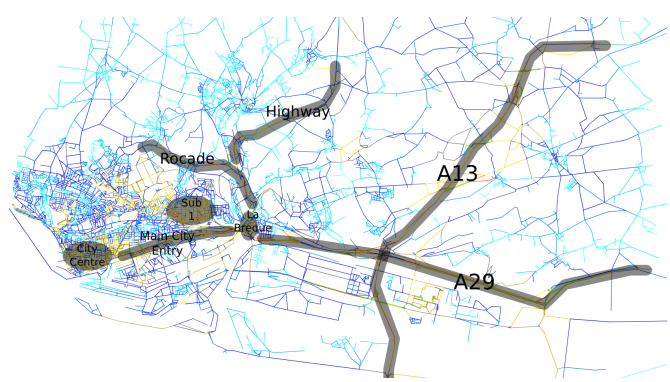


Fig. 6: Figure 5 with labels on important areas.

The number of passes found with this random walk is

an indication of the roads in the network were vehicles are inclined to pass, due to the topology of the road graph. This can be an indicator on areas where vehicle will most probably pass often.

We also run this simulation anew, but with some roads removed. Namely, we removed the A29 and A13 highways, as well as the ”main city entry”. The figure 7 shows the result. These road ”absorbed” a large part of the traffic, and therefore all the entities use a lot more other roads. The ”Breque” interchange is completely saturated. This place is well known by Le Havre inhabitants for the traffic jams occurring in the morning and the evening when people go to or leave their work. ”La Breque” is one of the mandatory road to use in order to leave or enter the city.

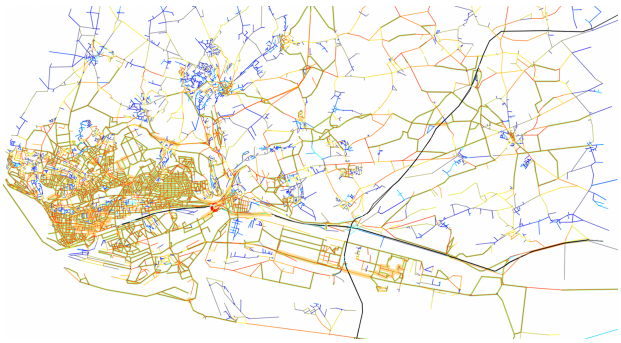

Fig. 7: Random walks in Le Havre, with the A29 and A13 highways removed as well as the main city entry.

If we run the same experiment on figure 8, but only disabling the ”main city entry”, the results are more similar to the one without any road removed. This may mean that this road could be removed and people redirected to adjacent roads without impacting largely the traffic.

Fig. 8: Random walks in Le Havre, with only the main city entry removed.

## V. Conclusion

We have extracted a household survey on the motorized population displacement in the Seine Estuary. For each displacement from a zone to another one, we computed a shortest path from a centroid of the first zone to a centroid to the other zone. We used an A-Star algorithm to do that. Results showed that the more we have centroids per zone, the more we explore more routes and the less we violate routes capacity. We also applied on the Seine estuary graph, a detection of organizations algorithm based on random walks. The last showed that we can predict the possibility to have traffic jams in some areas on the basis of the network structure, this without having any data on the traffic. In the near future, we will adopt a microsimulation of the traffic with the use of D-Star algorithm to dynamically compute paths and to respect the road capacities at any time.

## References


[1] J. Bourcier and P. Mallet, “Allocation spatio-temporelle de la population exposée aux risques majeurs. contribution à l’expologie sur le bassin de risques majeurs de l’estuaire de la seine: modèle pret-resse,” *Revue internationale de Géomatique*, vol. 16(10), pp. 457–478, 2006.

[2] C. Bertelle, A. Dutot, M. Nabaa, D. Olivier, and P. Mallet, “Modeling of the vulnerability related to the dynamic road traffic,” in *ESM*, Le Havre, 2008.

[3] C. Bertelle, A. Dutot, M. Nabaa, and D. Olivier, “Detection of organizations in large graphs : Application on risk management,” in *Agent Based Spatial Simulation*, 2008.

[4] R. Najlis and M. J. North, “Repast for gis.” University of Chicago and Argonne National Laboratory, IL, USA: In Proceedings of Agent 2004 : Social Dynamics: Interaction, Reflexivity and Emergence, 2004.

[5] S. Cutter, J. Mitchell, and M. Scott, “Revealing the vulnerability of people and places: a case study of georgetown county, south carolina,” *Annals of the Association of American Geographers*, vol. 90(4), pp. 713–737, 2000.

[6] E. Daudé, *Systèmes multi-agents pour la simulation en géographie : vers une Géographie Artificielle*. in Y. Guermont (dir.), Modélisation en Géographie : déterminismes et complexités, 2005, ch. 13, pp. 355–382.

[7] D. Provitolo, “A proposition for a classification of the catastrophe systems based on complexity criteria,” in *European Conference Complex Systems-EPNACS’07, Emergent Properties in Natural and Artificial Complex Systems, Dresden*, 2007, pp. 93–106.

[8] R. Church and T. Cova, “Mapping evacuation risk on transposion networks using a spatial optimization model,” *Transportation Research Part C: Emerging Technologies*, vol. 8(1-6), pp. 321–336, 2000.

[9] T. Cova and R. Church, “Modelling community evacuation vulnerability using gis,” *International Journal of Geographical Information Science*, vol. 11(8), pp. 763–784, 1997.

[10] A. Dutot, F. Guinand, D. Olivier, and Y. Pigné, “Graphstream: A tool for bridging the gap between complex systems and dynamic graphs,” in *EPNACS: Emergent Properties in Natural and Artificial Complex Systems*, 2007.

[11] A. Banos, “À la conquête de la fourmilière urbaine : quand le géographe se fait explorateur de mondes artificiels,” Tech. Rep., 2005. [Online]. Available: http://fig-st-die.education.fr/actes/actes_2005/index.htm