HAL
open science

A New Delay-SIR Model for Pulse Vaccination

Corentin Briat, Erik I. Verriest

To cite this version:

Corentin Briat, Erik I. Verriest. A New Delay-SIR Model for Pulse Vaccination. Biomedical Signal Processing and Control, 2009, 4 (4), pp.272-277. 10.1016/j.bspc.2009.06.003 . hal-00402235v2

HAL Id: hal-00402235

https://hal.science/hal-00402235v2

Submitted on 28 Oct 2010

HAL is a multi-disciplinary open access archive for the deposit and dissemination of scientific research documents, whether they are published or not. The documents may come from teaching and research institutions in France or abroad, or from public or private research centers.

L'archive ouverte pluridisciplinaire **HAL**, est destinée au dépôt et à la diffusion de documents scientifiques de niveau recherche, publiés ou non, émanant des établissements d'enseignement et de recherche français ou étrangers, des laboratoires publics ou privés.

A New Delay-SIR Model for Pulse Vaccination

C. Briat [a,1] E. I. Verriest [b,1]

[a] *GIPSA-Lab, Departement of Control Systems (former LAG), Grenoble Universités, ENSIEG - BP46, 38402 Saint Martin d'Hères - Cedex FRANCE,* corentin.Briat@gipsa-lab.inpg.fr

[b] *Georgia Institute of Technology, School of Electrical and Computer Engineering, Van Leer Electrical Engineering Building, 777 Atlantic Drive NW, Atlanta, GA 30332-0250* erik.verriest@ece.gatech.edu, *Erik I. Verriest was on leave at SCD, ESAT, KULeuven, Leuven, Belgium, while part of this paper was prepared.*

Abstract

This paper introduces a new model for disease outbreaks. This model describes the disease evolution through a system of nonlinear differential equations with distributed-delay. The main difference between classical SIR-model resides in the fact that the recovery rate of the population is expressed as a distributed-delay term modeling the time spent being sick by infected people. This model is identified to fit realistic measurements which shows the effectiveness of the model. Finally, we develop an optimal campaign vaccination strategy based on recent results on the impulsive control of time-delay systems.

Key words: Intensive and chronic therapy; Model formulation, experiment design; Decision support and control

1 Introduction

Nowadays, due to the large mobility of people within a country or even worldwide, the risk of being infected by a virus is relatively higher than several decades ago. That is why it is interesting to elaborate models of the evolution of diseases in order to develop strategies to decrease the impact of the outbreak.

[1] The authors contributed equally to this work

The first model of an epidemic was suggested by Bernoulli in 1970. He used this model to explain the basic control effects obtained through population immunization, and the advantages of vaccination in order to prevent an epidemic. Simple mathematical models are governed by action-mass laws [1] [2]. The rate of spread of infection is hereby assumed to be proportional to the density of susceptible people and the density of infected people (strong homogenous mixing). Simpler models, based on weak homogenous mixing (rate of new infections proportional to the number of susceptibles) are explored in [3]. One parameter stands out in these models: the ratio of the rate of infection to the rate of recovery, denoted by r_0, called the basic reproduction number. It is the average number of new cases produced when one infective is introduced into a completely susceptible host population. A basic result in modern epidemiology is the existence of a threshold value for the reproduction number. If r_0 is below the threshold, an epidemic outbreak does not follow the introduction of a few infectious individuals in the community. For example measles has a r_0 on the order of 12-15 [4].

The biological processes of sudden and severe epidemics are inherently nonlinear, and exhibit fundamentally different dynamic behaviors from linear systems (e.g. multiple equilibria, limit cycles, and chaos). In addition, more complex nonlinear models encompassing spatial variation (i.e. mixing locally within households and globally throughout the population, temporal variation (age structure) and delays [5] are also required to give added realism, which makes the control problem even harder. Hence, regarding the control of epidemics, few analytical results exist. A notable and recent exception is the work of [6]. Nonetheless, analytical or numerical approximations for infection control measures such as vaccination, dose profile and timing in pulse vaccination regimes [7], isolation and quarantine, screening or other public health interventions are vital for controlling severe epidemics. When using finite dimensional models, it is clear that when the initial state is reached again through the action of the control, the process will be periodic [8]. This is the principle behind pulse vaccination [9], although true periodicity of the state is not assumed. However, when delays are present the system is inherently infinite dimensional, and it is unlikely that the same state may be reached twice. Hence optimality of periodic pulse vaccination does not follow [10]. Techniques recently developed by the authors [11] for optimal impulsive control for systems with delays will be applied in order to overcome this problem.

We propose in this paper a new model embedding further information such as the minimal time spent sick by the infected population. This model considers that infected people remain sick for a certain amount of time greater to a threshold τ. This time is defined by a distribution over $[\tau, +\infty)$. The model is validated while identifying its parameters using real epidemic measurements reported in a medicine journal [12]. Finally we develop an optimal pulse vaccination strategy [13,14] minimizing a certain criterium.

In Section 2, we recall classical epidemiological models and in Section 3 some vaccination strategies are discussed. Then a new model is given to represent the dynamic of the disease among the population in Section 4. Finally, in Section 5 the optimal pulse vaccination strategy is treated and illustrated through an example based on a real scenario.

2 SIR Models

To understand how basic epidemics models work, we will first describe some open loop models. The most basic model is the SIR model. People who are susceptible (S) become infected with a force of infection proportional to the number of infected (I). After the infection people become immune and are removed (the R in the SIR model), or become susceptible again (SIS model). The simplest of these models are closed in the sense that total population remains fixed, either by disregarding immigration (for short duration outbreaks) or assuming that birth and death rates are equal (for long duration models) or both. These are the basic Kermack-McKendrick models described in all introductory books on mathematical epidemiology and they will be briefly described below:

$$\begin{aligned} \dot{S} &= -f_1(S,I) + f_2(I,R) \\ \dot{I} &= f_1(S,I) - f_3(I,S) \\ \dot{R} &= f_3(I,S) - f_2(I,R) \end{aligned} \tag{1}$$

where $f_1 > 0$ models the rate of infection, $f_2 > 0$ the rate at which recovered people become susceptible again and $f_3 > 0$ the rate of recovery for $(R, I, S) \in \mathbb{R}^3_+$

However, diseases such as measles do not fit such a description, and call for an extended model sporting a compartment of exposed but not yet infectious (E) individuals. Indeed, two characteristics of measles are its large reproductive ratio and life-long immunity. Models that match the observed dynamics require age-structure and mixing [15]. It is assumed in this paper that individuals stay in this class for a fixed period of time and hence such a model involves delays. Once the tools for the study of epidemic models have been produced and the models themselves understood, the real test of their validity is to use these models in predicting the outcome of various interventions [16], and ultimately in optimizing such interventions.

A natural question is: "What can be done to prevent a predicted epidemic from occurring?" The above models cast in various level of detail the evolution of epidemics as dynamical systems and first question one has to ask here is: "How can the dynamics be influenced by external factors?" and as standard

in control theory, "What closed loop control strategies can be used?"

3 Mathematical Framework

In order to be able to solve optimal immunization problems, some results on optimal impulse control for time-delay systems must be recalled [11], and for the sake of easy reference, we restate them here.

3.1 Optimal Impulse Control for Point Delay Systems

To fix ideas, let the autonomous system under consideration be modeled by

$$\dot{x} = f(x) + g(x_\tau), \tag{2}$$

where $x_\tau = x(t-\tau)$, and where $x(\theta)$ is given for $-\tau < \theta < 0$. Moreover, let the effect of the impulsive inputs be given by

$$x(T_i^+) = x(T_i^-) + G(x(T_i^-), u_i, T_i). \tag{3}$$

The amplitudes, u_i, and instants, T_i, are to be chosen such that a performance index

$$J = \int_0^{t_f} L(x(t))dt + \sum_{i=1}^{N-1} K(x(T_i^-), u_i, T_i) \tag{4}$$

is optimized. Here, L is the cost associated with the state variables (in the problem at hand, this is directly related to the loss of productivity due to sickness plus the cost of care for the sick. K is the cost due only to the vaccination (occurring at discrete instants, T_i) , the 'pulses'. This cost may depend not only on the vaccination effort, u, but also on the state x just before the vaccination is initiated (hence T_i^-), and perhaps the time (due to varying logistics costs, e.g. due to seasonal effects.)

In [11], the following result (that will provide a basis for the developments on this proposal) was derived:

Theorem 3.1 *The impulsive system in Equations (2) and (3) minimizes the performance index (4) if the magnitudes u_i and times T_i are chosen as follows: Define:*

$$H_i = L(x) + \lambda_i^T(f(x) + g(x_\tau)) \tag{5}$$
$$M_i = K(x(T_i^-), u_i, T_i) + \mu_i G(x(T_i^-), u_i, T_i). \tag{6}$$

Euler-Lagrange Equations:

$$\dot{\lambda}_i = \left(\frac{\partial L}{\partial x}\right)^T - \left(\frac{\partial f}{\partial x}\right)^T \lambda_i - \chi_i^+ \left(\frac{\partial g}{\partial x}\right)^T \lambda_i^\tau - \chi_{i+1}^- \left(\frac{\partial g}{\partial x}\right)^T \lambda_{i+1}^\tau, \tag{7}$$

with $T_{i-1} < t < T_i,\ i = 1, \ldots, N-1$, *and where* $\chi_i^+(t) = 1$ *if* $t \in [T_{i-1}, T_i - \tau]$ *and* 0 *otherwise,* $\chi_{i+1}^-(t) = 1$ *if* $t \in [T_i - \tau, T_i]$ *and* 0 *otherwise, and* $\lambda_i^\tau = \lambda_i(t+\tau)$. *Moreover,*

$$\dot{\lambda}_N = -\left(\frac{\partial L}{\partial x}\right)^T - \left(\frac{\partial f}{\partial x}\right)^T \lambda_N - \chi_N^+ \left(\frac{\partial g}{\partial x}\right)^T \lambda_N^\tau. \tag{8}$$

Boundary Conditions:

$$\lambda_N(T_N) = 0 \tag{9}$$

$$\lambda_i(T_i^-) = \lambda_{i+1}(T_i^+) + \left(\frac{\partial M_i}{\partial x}\right)^T. \tag{10}$$

Multipliers:

$$\mu_i = \lambda_{i+1}(T_i^+),\ i = 1, \ldots, N-1 \tag{11}$$

$$\mu_N = -\left(\frac{\partial M_N}{\partial x}\right)^T. \tag{12}$$

Optimality Conditions:

$$\frac{dJ}{du_i} = \frac{\partial M_i}{\partial u_i} = 0 \tag{13}$$

$$\begin{aligned}\frac{dJ}{dT_i} &= H_i(T_i^-) - H_{i+1}(T_i^+) + \frac{\partial M_i}{\partial T_i} \\ &\quad + \lambda_{i+1}(T_i+\tau)^T (g(x(T_i^+)) - g(x(T_i^-))) = 0.\end{aligned} \tag{14}$$

These necessary and sufficient optimality conditions will have to be massaged in some manner in order to be numerically effective.

3.2 Gradient Descent

The reason why the formulas derived here above are particularly easy to work with is that they give us access to a very straight-forward numerical algorithm.

For each iteration k, let $\theta_k = (T_k, u_k)^T$ be the vector of control variables, and compute the following:

Step 1. Set $k = 0$ and initialize θ_0

Step 2. Compute $x(t)$ forward in time on $[t_0, t_f]$ by integrating from $x(t_0) = x_0$.

Step 3. Compute the costate $\lambda(t)$ backward in time from t_f to t_0 by integrating the costate dynamics.

Step 4. Use the equations above to compute $\nabla_\theta J = (\frac{dJ}{dT}, \frac{dJ}{dv})$

Step 5. Update θ as follow :

$$\theta(k+1) = \theta(k) - \ell(k)\nabla_\theta J^T$$

where $\ell(k)$ is the step size, e.g. given by the Armijo algorithm [17].

Step 6. If stopping criterion is satisfied then STOP else go to Step 2.

Note that the cost function J may be non-convex which means that we can only expect the method to reach a local minimum. But, as we will see, it still can give quite significant reductions in cost.

4 Delay-SIR Model

In this section a new model for an epidemic, the delay SIR, is proposed and matched against real epidemic data. While both the new and the old (standard SIR) model corroborate the data, the delay-SIR may be more adapted to a physical model of the disease [18–23,10,24,25].

The main ingredient in this model is the fact that we assume that once infected, a person is instantaneously infectious, and this for at least a time τ. After this initial lapse, we assume that the person remains infectious for an additional random time span, characterized by a density function $\rho(\theta)$. Such a model seems more reasonable to us, than the assumption that the infectious people are removed at a rate α used in the standard SIR model. Hence the delay-SIR model is described by

$$\dot{S}(t) = -\beta S(t)I(t) \tag{15}$$

$$\dot{I}(t) = \beta S(t)I(t) - Q(t) \tag{16}$$

with $Q(t)$ the removal rate. As in the classic SIR, in an infinitesimal time dt the number of newly infected is given by the mass action law $\beta S(t)I(t)dt$. Meanwhile from the newly infected between time $t-\theta$ and $t+dt-\theta$, a fraction $\rho(\theta)$ becomes immune and is removed from the infected. The support of ρ is

contained in (τ, ∞). Hence,

$$Q(t) = \int_{\tau}^{\infty} \rho(\theta) S(t-\theta) I(t-\theta) \mathrm{d}\theta. \tag{17}$$

If ρ has a rational Laplace transform, the above equations may be extended to a pure (crisp) delay system by further differentiation, as explained in [26]. This leads to a general delay model of the form

$$\dot{S}(t) = -\beta S(t) I(t) \tag{18}$$
$$p(t) = S(t) I(t) \tag{19}$$
$$\dot{I}(t) = \beta S(t) I(t) - hq(t) \tag{20}$$
$$\dot{q}(t) = Fq(t) + gp(t-\tau). \tag{21}$$

A block diagram is given in Figure 1. where $\dim(q) = n$ and (F, g, h) is an n-th

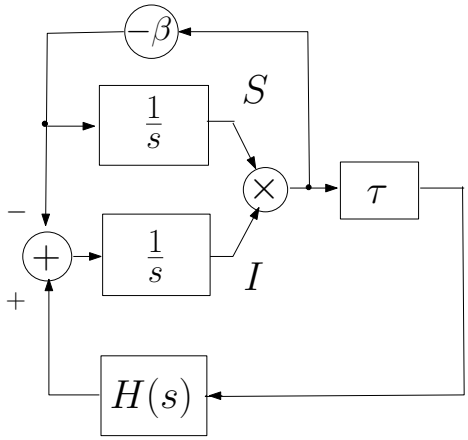

Fig. 1. Generic Delay-SIR

SISO system with transfer function $H(s) = h(sI - F)^{-1}g$. It can be reorganized as an input-delayed linear system with nonlinear dynamic feedback. In this form the delay τ may be identifiable from the data using techniques from [27].

In some papers, a delay representing the incubation time is taken into account. However, for some diseases the incubation time is very small and can be neglected but the time spent being ill cannot be neglected. It will be illustrated in the example that the proposed model describes well a disease with high and quick impact. As an extension, the proposed methodology can be easily adapted to more complex epidemics outbreaks involving more delays such as time to be immune after vaccination, incubation time and time to become susceptible again.

We used the data published in [12] because it has been used by other authors. This data pertains to an influenza epidemic in a boys' boarding school. The population in this model is $N = 763$. Assuming that the onset was due to one

infected individual, we set $S(0) = 762$ and $I(0)$. For the case of the classic SIR model, where $Q(t)$ is replaced by $-\alpha I(t)$, the best fitting SIR model ($\beta := 0.00218; \alpha := 0.44$) and the original data are displayed in Figure 2. We

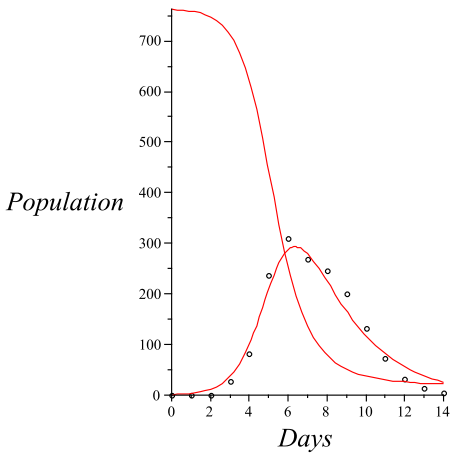

Fig. 2. SIR model fit to raw data

considered the delay-SIR model with second order distribution (meaning that the corresponding $H(s)$ is a second order system).

$$\rho(\theta) = \mathcal{N}(1 + \gamma\theta)\,\mathrm{e}^{-\lambda\theta}$$

Here $\mathcal{N}$ is a normalization factor, ensuring that

$$\int_{\tau}^{\infty} \rho(\theta)\mathrm{d}\theta = 1$$

We find

$$\mathcal{N} = \frac{\lambda^2}{\gamma + \lambda + \gamma\lambda\tau}\,\mathrm{e}^{\lambda\tau}\,.$$

This distribution corresponds to a second order Jordan block. A good fit to the data was found for $\tau = 0.69, \beta = 0.00177, \gamma = 0.3$, and $\lambda = 0.75$. The evolution of $I(t)$ and $S(t)$ is given in Figure 3 where it is possible to see that the proposed model characterizes well the increase and decrease of the number of infectious people but exhibits a larger outbreak peak than using the classical SIR model. This better characterization is mainly due to a higher number of parameters. Moreover, it is important to note that the performed identification is not optimal and it might be possible to a better identified model for this example. The detailed description is thus

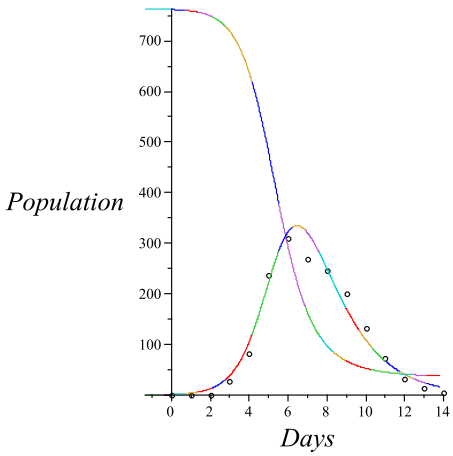

Fig. 3. Delay SIR model (Jordan) fit to raw data

$$
\begin{aligned}
\dot{S}(t) &= -\beta S(t)I(t) \\
\dot{I}(t) &= \beta S(t)I(t) - \beta\mathcal{N}(q_1(t) + \gamma q_2(t) \\
\dot{R}(t) &= \beta\mathcal{N}(q_1(t) + \gamma q_2(t)) \\
p(t) &= S(t)I(t) \\
\dot{q}_1(t) &= -\lambda q_1(t) + \mathrm{e}^{-\lambda\tau}\, p(t-\tau) \\
\dot{q}_2(t) &= q_1(t) - \lambda q_2(t) + \tau\, \mathrm{e}^{-\lambda\tau}\, p(t-\tau)
\end{aligned}
\tag{22}
$$

These equations are obtained by successive differentiations of the integral term as explained in [26]. This is is detailed below.

Proof : Note that the integral term can be rewritten as

$$\int_{-\infty}^{+\infty} \Gamma(\theta-\tau)\rho(\theta)p(t-\theta)d\theta$$

and takes the form of a convolution where $\Gamma(\cdot)$ is the Heavyside function and $p(\cdot) = S(\cdot)I(\cdot)$. Hence in the Laplace domain this corresponds to the product $H(s)P(s)$ where $H(s)$ and $P(s)$ are respectively the Laplace transform of $\Gamma(\theta-\tau)\rho(\theta)$ and $p(\theta)$.

After some simple computations, we get

$$H(s) = \frac{\mathcal{N}}{s+\lambda}e^{-(\lambda+s)\tau} + \frac{\mathcal{N}\gamma\tau}{s+\lambda}e^{-(\lambda+s)\tau} + \frac{\mathcal{N}\gamma}{(s+\lambda)^2}e^{-(\lambda+s)\tau}$$

Let

$$\begin{aligned}
Q_1(s) &= \frac{1}{s+\lambda}e^{-(s+\lambda)\tau} \\
Q_2(s) &= \frac{1}{(s+\lambda)^2}e^{-(\lambda+s)\tau} + \frac{\tau}{s+\lambda}e^{-(\lambda+s)\tau} \\
&= \frac{1}{s+\lambda}\left(Q_1(s) + \tau e^{-(\lambda+s)\tau}\right) \\
H(s) &= NQ_1(s) + \mathcal{N}\gamma Q_2(s)
\end{aligned}$$

Then we have

$$\begin{aligned}
\dot{q}_1(t) &= -\lambda q_1(t) + e^{-\lambda\tau}p(t-\tau) \\
\dot{q}_2(t) &= -\lambda q_2(t) + q_1(t) + \tau e^{-\lambda\tau}p(t-\tau) \\
Q(t) &= \mathcal{N}q_1(t) + \mathcal{N}\gamma q_2(t)
\end{aligned}$$

and we get (22). □

5 Optimal Pulse Vaccination

We present here the application of the optimal pulse control to the proposed model of dynamic outbreak.

5.1 Necessary and Sufficient Conditions for optimal pulse vaccination

Model (22) needs to be augmented by the set of equations (23)-(27) to capture the whole impulsive control framework.

$$S(T_k^+) = S(T_k^-) - u_k \tag{23}$$
$$I(T_k^+) = I(T_k^-) \tag{24}$$
$$R(T_k^+) = R(\tau_k^-) + u_k \tag{25}$$
$$q_1(T_k^+) = q_1(T_k^-) \tag{26}$$
$$q_2(T_k^+) = q_2(T_k^-) \tag{27}$$

The vaccination takes place at certain times T_k, $k = 1, \ldots$ and have magnitude u_k. These decision variables must be determined in order to minimize the objective function (we consider a one pulse vaccination strategy for sake of simplicity)

$$J(v,T) = cv^2 + \int_0^{t_f} I(t)dt. \tag{28}$$

The integral term measures the burden of disease (total time spent sick in the population) during the epidemic, and the quadratic control cost reflects the added logistical burden when large populations need to be vaccinated. Note

that a purely linear vaccination cost, without imposing the constraint $v \geq 0$, may lead to inadmissible controls [28].

We present here a simple result with one pulse vaccination strategy

Lemma 5.1 *Consider system (22) with (23)-(27), there exist an (locally) optimal one pulse vaccination strategy minimizing cost (28) if the following necessary and sufficient conditions are satisfied: Necessary Conditions:*

$$\dot{\lambda} = -\left(\frac{\partial L}{\partial x}\right)^T - \left(\frac{\partial f}{\partial x}\right)\lambda - \left(\frac{\partial g}{\partial x}\right)\lambda^\tau$$

$$\lambda(\eta) = 0$$

$$\eta \in [t_f, t_f + \tau]$$

$$t \in [T, t_f]$$

Sufficient Conditions:

$$2cv + \lambda(T)^T \begin{bmatrix} -1 \\ 0 \\ 0 \\ 0 \end{bmatrix} = 0 \quad \beta\lambda(T)^T \begin{bmatrix} -1 \\ 1 \\ 0 \\ 0 \end{bmatrix} - \mathrm{e}^{-\lambda\tau}\,\lambda(T+\tau)^T \begin{bmatrix} 0 \\ 0 \\ 1 \\ \tau \end{bmatrix} = 0, \lambda(\eta) = 0, \eta \in [t_f, t_f + \tau]$$

with $\dfrac{dL}{dx} = \begin{bmatrix} 0 & 1 & 0 & 0 \end{bmatrix}$ *and*

$$\frac{df}{dx} = \begin{pmatrix} -\beta I & -\beta S & 0 & 0 \\ \beta I & \beta S & -\beta\mathcal{N} & -\beta\mathcal{N}\gamma \\ 0 & 0 & -\lambda & 0 \\ 0 & 0 & 1 & -\lambda \end{pmatrix} \qquad \frac{dg}{dx} = \begin{pmatrix} 0 & 0 & 0 & 0 \\ 0 & 0 & 0 & 0 \\ -\mathrm{e}^{-\lambda\tau} I & -\mathrm{e}^{-\lambda\tau} S & 0 & 0 \\ \tau\,\mathrm{e}^{-\lambda\tau} I & \tau\,\mathrm{e}^{-\lambda\tau} S & 0 & 0 \end{pmatrix} \tag{29}$$

Proof : Identifying system (22) with template system (2) we have $L(x) = I$,

$$f(x) = \begin{pmatrix} -\beta SI \\ \beta SI - \beta\mathcal{N}(q_1 + \gamma q_2) \\ -\lambda q_1 \\ q_1 - \lambda q_2 \end{pmatrix} \qquad g(x) = \begin{pmatrix} 0 \\ 0 \\ \mathrm{e}^{-\lambda\tau} SI \\ \tau\,\mathrm{e}^{-\lambda\tau} SI \end{pmatrix} \tag{30}$$

from which it is straightforward to compute the Jacobian matrices. We have removed the equation governing R since its value can be trivially retrieved

from S and I (i.e. we have the relation $S + I + R = cst$). Note we have

$$\begin{aligned} L(x) &= I & \frac{\partial L}{\partial x} &= \begin{bmatrix} 0 & 1 & 0 & 0 \end{bmatrix} \\ K(x(T^-), v, T) &= cv^2 \end{aligned} \tag{31}$$

As $M = K + \mu^T G$ satisfies $\frac{\partial M}{\partial x} = 0$, it means that $\lambda_1(T^-) = \lambda_2(T^+)$ (i.e. the costate is continuous). Now let λ denote this single continuous costate and note that we only need to solve for λ on the time interval $[T, t_f]$ with $\lambda(t_f) = 0$. After solving for λ, we get that $\mu = \lambda(T)$ and hence that the first optimality conditions implies

$$\frac{dJ}{dv} = 2cv + \lambda(T)^T \begin{bmatrix} -1 \\ 0 \\ 0 \\ 0 \end{bmatrix} = 0 \tag{32}$$

The second optimality condition is a bit more involved since the function $g(x)$ depends on S which will experience an impulse at time T. First note that $g(x_\tau(T^-)) - g(x_\tau(T^+)) = 0$ then it is straightforward to obtain

$$H(T^-) - H(T^+) = \lambda(T)^T (f(x(T^-)) - f(x(T^+))) \tag{33}$$

where

$$f(x(T^-)) - f(x(T^+)) = \begin{bmatrix} -\beta I(T)v \\ \beta I(T)v \\ 0 \\ 0 \end{bmatrix} \tag{34}$$

Moreover as

$$g(x(T^+)) - g(x(T^-)) = \begin{bmatrix} 0 \\ 0 \\ -\,\mathrm{e}^{-\lambda\tau}\, I(T)v \\ -\tau\,\mathrm{e}^{-\lambda\tau}\, I(T)v \end{bmatrix} \tag{35}$$

then we get

$$\frac{dJ}{dT} = \lambda(T)^T \beta I(T)v \begin{bmatrix} -1 \\ 1 \\ 0 \\ 0 \end{bmatrix} - \lambda(T+\tau)^T\,\mathrm{e}^{-\lambda\tau}\, I(T)v \begin{bmatrix} 0 \\ 0 \\ 1 \\ \tau \end{bmatrix} = 0 \tag{36}$$

	$t_f = 15$	$t_f = 50$
$c = 0.02$	100	298
$c = 0.05$	99.9	234
$c = 0.1$	77.22	198
$c = 0.2$	39.6	119.8
$c = 0.5$	16	47.9
$c = 0.8$	10	32.28
$c = 1$	8	26.5
$c = 3$	2.7	9.11

Table 1
Optimal values of u w.r.t. cost (i.e. c and t_f)

and assuming that neither $I(T) = 0$ nor $v = 0$ we have

$$\beta\lambda(T)^T \begin{bmatrix} -1 \\ 1 \\ 0 \\ 0 \end{bmatrix} - \mathrm{e}^{-\lambda\tau}\,\lambda(T+\tau)^T \begin{bmatrix} 0 \\ 0 \\ 1 \\ \tau \end{bmatrix} = 0 \tag{37}$$

□

5.2 Numerical Example

We consider the model identified in Section 4 (i.e. $\tau = 0.69, \beta = 0.00177, \gamma = 0.3$, and $\lambda = 0.75$). The results are summarized in Table 5.2 using $u_0 = 100$ and $T_0 = 10$ as initial conditions. It is worth noting that for $t_f = 15$ we always find $T = 5.7$ while for $t_f = 50$ we get $T = 6.64$. For simulation purpose we choose the values $c = 0.02$ and $t_f = 15$ for which we obtain the better ratio change and we obtain figure 4.

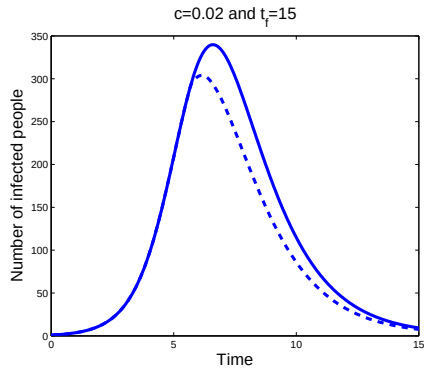

Fig. 4. Evolution of infected people without (plain) and with one pulse vaccination strategy (dashed) - criterium 1

If we compute the ratio of the integral term $\int_0^{t_f} I(t)dt$ with and without the vaccination strategy we obtain $ratio = 0.8577$ and this measures the reduction of the burden of the outbreak.

In the case $c = 0.02$ and $t_f = 50$ we obtain figure 5.

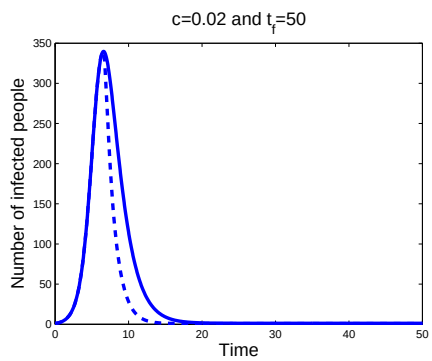

Fig. 5. Evolution of infected people without (plain) and with one pulse vaccination strategy (dashed) - criterium 2

In that case we obtain: $ratio = 0.6981$ and this shows that the second strategy is better than the first one. Nevertheless, the second strategy is more expensive than the first one since the number of people to vaccine is higher.

It is worth mentioning that, the multiple pulse vaccination strategy might lead to better result but it is not detailed here for sake of brevity. In this case, the new criterium to minimize should be

$$J_n := \sum_{i=1}^{N_p} c_i u_i^2 + \int_0^{t_f} I(t)dt \tag{38}$$

where $c_i > 0$ are chosen weighting parameters.

6 Conclusion

We have proposed a new epidemiological model. This new model considers the standard SIR model but includes a distribute delay modeling the rate at which infected people recover from the disease. Following the measurement of a real outbreak, we have identified the parameters and shows that it correctly describes the reality. On the other hand, we have developed an optimal pulse vaccination strategy minimizing a certain criterium measuring the cost of the campaign and the time spent by the population being sick. The interest of the approach is demonstrated through a realistic example.

References

[1] D. Daley, J. Gani, Epidemic modelling: an introduction, Cambridge University Press, 1999.

[2] H. W. Hethcote, The mathematics of infectious diseases, SIAM Review 42 (4) (2002) 599–653.

[3] R. Anderson, R. May, Infectious Diseases of Humans: Dynamics and Control, Oxford University Press, 2002.

[4] R. Anderson, R. May, Directly transmitted infectious diseases: control by vaccination, Science 215 (1982) 1053–1060.

[5] P. van den Driessche, Time delay in epidemic models, Mathematical Approaches for Emerging and Reemerging Infectious Diseases: An Introduction.

[6] H. Behncke, Optimal control of deterministic epidemics, Optimal Control Applications and Methods 21 (2000) 269–285.

[7] L. Stone, B. Shulgin, Z. Agur, Theoretical examination of the pulse vaccination policy in the sir epidemic model, Mathematical and Computer Modelling 31 (2000) 207–215.

[8] D. Bainov, P. Simeonov, Impulsive Differential Equations: Periodic Solutions and Applications, Pitman, 1996.

[9] D. Nokes, J. Swinton, Vaccination in pulses: a strategy for global eradication of measles and polio ?, Trends in Microbiology 5 (1997) 14–19.

[10] D. Earn, P. Rohani, B. Bolker, B. Grenfell, A simple model for complex dynamical transitions in epidemics, Science 287(5453) (2000) 667–670.

[11] E. Verriest, F. Delmotte, M. Egerstedt, Optimal impulsive control for point delay systems with refractory period, in: Proceedings of the 5-th IFAC Workshop on Time Delay Systems, Leuven, Belgium, September 2004, 2004.

[12] T. Lancet, Unknown article title, The Lancet March 4 1978 391 issue 8062.

[13] F. D. E.I. Verriest, M. Egerstedt, Control of epidemics by vaccination, in: American Control Conference, Portland, Oregon, June 2005, 2005.

[14] E. Verriest, Optimal control for switched point delay systems with refractory period, in: 16-th IFAC World Congress, Prague, Czeck Republic, 2005.

[15] D. Schenzle, An age-structured model of pre-and post-vaccination measles transmission, IMA J. Math App. Med. Biol. 1 (1984) 169–191.

[16] K. Wickwire, Mathematical models for the control of pests and infectious diseases: A survey, Theoretical Population Biology (1977) 182–238.

[17] L. Armijo, Minimization of functions having lipschitz continuous first-partial derivatives, Pacific Journal of Mathematics 16 (1996) 1–3.

[18] O. Diekmann, J. Heesterbeek, Mathematical Epidemiology of Infectious Diseases, Wiley, 2000.

[19] M. Keeling, P. Rohani, Modeling Infectious Diseases in Humans and Animals, Princeton University Press, 2008.

[20] P. van den Driessche, X. Zou, Modeling relapse in infectious diseases, Mathematical Biosciences 207 (2007) 89–103.

[21] A. Iggidr, J. Mbang, G. Sallet, Stability analysis of within-host parasite models with delays, Mathematical Biosciences 209 (2007) 51–75.

[22] S. Ghosh, S. Bhattacharyya, D. Bhattacharyya, Role of latency period in viral infection: A pest control model, Mathematical Biosciences 207 (2007) 619–646.

[23] E. Beretta, Y. Takeuchi, Convergence results in sir epidemic models with varying population sizes, Nonlinear Analysis, Theory, Methods and Applications 28(12) (1997) 1909–1921.

[24] Y. Kyrychkoa, K. Blyuss, Global properties of a delayed SIR model with temporary immunity and nonlinear incidence rate, Nonlinear Analysis: Real World Applications 6(3) (2000) 495–507.

[25] J. Tchuenche, A. Nwagwo, R. Levins, Global behaviour of an SIR epidemic model with time delay, Mathematical Methods in the Applied Sciences 30(6) (2006) 733–749.

[26] E. I. Verriest, Linear systems with rational distributed delay: reduction and stability, in: European Control Conference, ECC'99, Karlsruhe, Germany, 1999.

[27] L. Belkoura, J. P. Richard, M. Fliess, On-line identification of systems with delayed inputs, in: 16th International Symposium on the Math. Theory of Networks and Systems (MTNS-06), Kyoto, Japan July 2006, 2006.

[28] P. Ogren, C. Martin, Optimal vaccination strategies for the control of epidemics in highly mobile populations, in: Proceedings of the CDC 2000, Sydney, Australia, 2000.