HAL
open science

ENERGY SCAVENGING BASED ON TRANSIENT THERMAL GRADIENTS: APPLICATION TO STRUCTURAL HEALTH MONITORING OF AIRCRAFTS

Nicolas Bailly, Jean-Marie Dilhac, Christophe Escriba, Claude Vanhecke, Nicolas Mauran, Marise Bafleur

To cite this version:

Nicolas Bailly, Jean-Marie Dilhac, Christophe Escriba, Claude Vanhecke, Nicolas Mauran, et al.. ENERGY SCAVENGING BASED ON TRANSIENT THERMAL GRADIENTS: APPLICATION TO STRUCTURAL HEALTH MONITORING OF AIRCRAFTS. 8th International Workshop on Micro and Nanotechnology for Power Generation and Energy Conversion Applications (PowerMEMS 2008), Nov 2008, SENDAI, Japan. pp.205-208. hal-00384129

HAL Id: hal-00384129

https://hal.science/hal-00384129v1

Submitted on 14 May 2009

HAL is a multi-disciplinary open access archive for the deposit and dissemination of scientific research documents, whether they are published or not. The documents may come from teaching and research institutions in France or abroad, or from public or private research centers.

L'archive ouverte pluridisciplinaire **HAL**, est destinée au dépôt et à la diffusion de documents scientifiques de niveau recherche, publiés ou non, émanant des établissements d'enseignement et de recherche français ou étrangers, des laboratoires publics ou privés.

ENERGY SCAVENGING BASED ON TRANSIENT THERMAL GRADIENTS: APPLICATION TO STRUCTURAL HEALTH MONITORING OF AIRCRAFTS

Nicolas Bailly[1], Jean-Marie Dilhac[1,2], Christophe Escriba[1,2], Claude Vanhecke[3], Nicolas Mauran[1], Marise Bafleur[1]

[1]LAAS-CNRS, Université de Toulouse, Toulouse, France

[2]Université de Toulouse, INSA

[3]Thalès Alenia Space, Toulouse, France

Abstract: Results about energy capture from the environment associated with the self-powering of a wireless sensor network (WSN) for structural health monitoring of aircrafts (SHM) are presented. Thermal gradients taking place during specific flight phases are converted into electrical energy by using a small water tank coupled to a thermoelectric generator which output is connected to a storage circuit. The proposed system is experimentally assessed in an environmental chamber. Regarding the energy storage issue, considering the operating temperature (-55°C) and the amount of energy, supercapacitors are suggested instead of batteries. For capacitors charging and later use of energy, a circuit based on a voltage booster associated with a DC-DC regulator is designed and simulated.

Key words: energy scavenging, thermoelectric generator, voltage booster, aircraft structural health monitoring

1. INTRODUCTION

Aircraft in-service structural health monitoring (SHM) by wireless sensors based on MEMS technology, bonded on the aircraft structure, is considered as a powerful tool to both decrease inspection costs and ensure safety [1]. In-service monitoring of corrosion, of cracks and of impact damage, is therefore considered by major aircraft manufacturers [1].

In that context, a network of a relatively large number of self-powered MEMS-based nodes, would perform sensing, data processing and wireless transmission of information. The ultimate objective of such a Wireless Sensor Network (WSN) is to provide a warning when damage is initiated, before the functions of the structure are compromised.

A critical issue for such a WSN is the requirement of energy autonomy that cannot be provided by batteries because of batteries limited lifetime and storage performance together with their inability to operate at the very low temperatures encountered in the aeronautical application. As a result, each node must get sufficient energy from its environment [2]. A possible source of energy could be thermal gradients. This paper investigates the potentialities of this method in the very specific aeronautical application context.

2. DESCRIPTION OF SCAVENGING SYSTEM

2.1 Description of Application

Despite the fact that various schemes may be considered in the context of aircraft structural health monitoring, we will restrict ourselves to the following. We will consider nodes operating from unpowered locations in the aircraft. Application precludes external devices mounted on the airfoils outside the aircraft, therefore excluding the use of solar energy, which is known to be one of the most efficient way (in terms of power density) of capturing energy from a system environment.

For our application, the WSN lifetime should be similar to that of the aircraft, i.e. between ten and twenty years. Moreover, our application being related to SHM of large–size aircrafts, data sensing and information processing are to be performed by nodes while at high altitude, up to 12 000 m and temperatures as low as –60° Celsius.

2.2 Origin of Transient Temperature Gradients

Since from takeoff to cruise altitude, atmospheric temperature usually strongly decreases, thermal gradients may therefore appear inside the WSN node hardware. These gradients can be converted into voltage via a thermoelectric generator based on the Seebeck effect. However, sooner or later, the node will be back in an isothermal state and no more energy will be available. Therefore, to both increase the gradient value and duration, we chose to use water, therefore benefiting from its high specific heat (4.2 J/g°C – to be compared with that of Si, 0.7 J/g°C). Water melting point (0°C) being situated within the aircraft temperature operating range, the system also benefits from energy exchanges related to water latent heat of fusion (330 J/g), with the added advantage of water

being maintained at a constant temperature during the freezing or melting phases, hence increasing temperature gradient values.

Referring to the International Standard Atmosphere (ISA) defined by the International Civil Aviation Organization (ICAO), at an en-route flight altitude of 12000 m, atmospheric temperature is about – 60°C. On the other hand, airfoils exposed to sunlight when aircraft is parked heat up, and specific wing areas may reach temperatures over 100°C.

To roughly assess the upper limit for the thermal energy that could be captured, let us consider a sealed tank containing 1 g of water. As already mentioned, water exhibits a specific heat C of around 4.2 J/g.°C, and an enthalpy of fusion H_f of 330J/g. Stating a capsule temperature at takeoff of 15°C, and a cruise temperature of – 60°C, the temperature variation ΔT is 75°C, and the energy W_T associated with temperature variation ΔT is given by:

$$W_T = \Delta T \times C + H_f = 645 \text{ J/g} \qquad (1)$$

This value may be doubled as temperature variations take place both during climbing and descent that is a total of 1290 J. This value may be slightly higher if takeoff temperature and therefore initial temperature of the sensor node is higher. Unfortunately, it can conversely be very limited if this temperature is below icing temperature.

However, this is a thermal energy and it has to be converted into electrical energy. Thermoelectric generators using the Seebeck effect may achieve this step. Such generators are current sources converting temperature difference between a cold and a hot surface into electrical energy. Unfortunately, for temperature differences of a few tens of degrees, the yield of such components may be as low as 1% or less, drastically reducing the energy really available for WSN node activity. On the other hand, commercial products are fortunately available [3,4] in sizes compatible with our application.

2.3 Experimental Apparatus

To assess the feasibility of the proposed method, we chose to operate a 2.47 mm x 2.47 mm *Micropelt GmBH* [4] thin film thermoelectric generator (MPG-D602 type), implemented into a custom-made test module. The thickness of the generator is 500 µm, it incorporates 450 couples of n-type and p-type thermoelectric material.

We designed a test module to accommodate the above thermoelectric generator. Briefly, the thermoelectric generator is compressively loaded between a small tank filled with 12 ml of water and a 9 cm x 9 cm, 2 mm thick Al plate simulating the aircraft structure. Putting the generator under a compressive load helps maximize heat transfer. To electrically isolate the surfaces of the generator, 0.25 mm thick Al2O3 insulating wafers are inserted in between the thermoelectric generator and the surfaces to which it is mounted. To prevent a significant loss of energy by thermal bypass, an efficient thermal insulation is implemented to force most of the thermal energy to pass through the thermoelectric generator.

To simulate the aircraft temperature conditions, we tested the scavenging module into an environmental test system TP04200A ThermoStream® from Temptronic corporation. This equipment is designed for testing electronic components from -85°C to +225°C. For this purpose it can generate a stream of dry air with controlled temperature.

To model the evolution of the temperature during a flight, we chose the standard atmosphere model of ICAO, that is a temperature of 15°C (59°F) and a pressure of 1013.25 hPa (14.7 psi) at sea level, and a decreasing rate of -6.5°C/km until the limit temperature -56.5°C. However, during a typical flight, there is no linear evolution of temperature vs. time because a decrease of the air density vs. altitude degrades the engine performance during the ascent, and directly impacts the speed of ascent. For the descent, the constraints of engine performance do not apply any more and the plane goes down linearly, only limited by the descent speed standards according to the altitude.

3. EXPERIMENTAL RESULTS

We set the ThermoStream® so that it followed the temperature corresponding to a typical one-hour flight of a commercial airliner. In Fig. 1, the airflow and water tank temperatures are plotted vs. time.

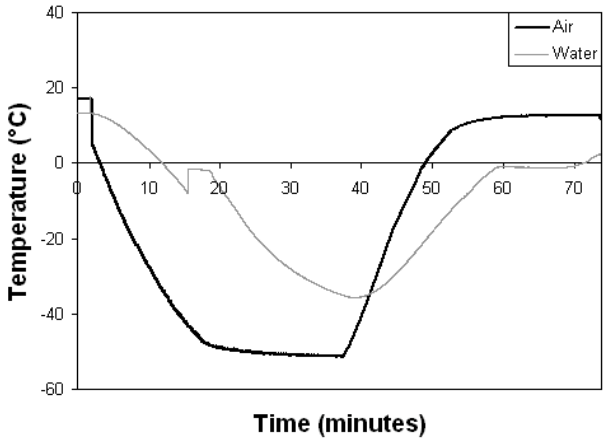

Fig. 1: Outside air and water temperatures vs. time for a short range flight (experimental)..

The airflow temperature initially decreases rapidly, and thermal energy is withdrawn from the water tank by conduction, mainly through the thermoelectric generator. The liquid water temperature consequently decreases until it drops below the freezing point (0°C) and then rebounds and as expected holds steady while water crystallizes. At this transition point between liquid and solid states, extra energy (enthalpy of fusion) has to be withdrawn before the water is completely frozen and ice temperature decreases again until steady state is established. During steady state a small temperature difference between ice and airflow is maintained due to non-ideal thermal isolation between water tank and its surrounding environment at room temperature.

When airflow temperature rises back to the initial 15°C starting point, ice temperature increases up to the transition point between solid and liquid where its temperature remains constant until the extra energy required for melting is added by conduction through the generator. During the above cycle, thermoelectric generator output open voltage, internal resistance and generated power were monitored. To evaluate the amount of scavenged energy, it was necessary to continuously measure the power generated by the thermoelectric generator during the cycle. The temperature gradient and the corresponding output voltage are plotted in Fig. 2. Output power and cumulated energy are plotted in Fig. 3.

For all variables excepted energy, a first peak occurs between 10 and 15 min after take off, when the temperature difference between water and airflow is high: the aircraft structure is reaching its final steady state low temperature while water icing is still not completed thus maintaining water temperature at 0°C. Another peak takes place during the descent, and again it corresponds to the plane structure being at its final temperature while water is still frozen. However, as the final temperature is here closer to zero than the in route temperature, the thermal gradient is smaller and so is the output power of the thermoelectric generator. The first peak during ascent is consequently the absolute maximum of the power characteristic: the WSN node can therefore benefit, from the beginning of the flight, of the essential of the energy to be captured during the total duration of the flight.

In the context of scavenging, assessing the captured energy makes more sense than considering the generated instantaneous power. In that respect, for the above reference flight, it can be seen from Fig. 3 that roughly 34 J can be captured from the thermal environment. Considering that the water tank capacity is 10 ml, corresponding to 10 g of water, equation (1) gives a thermal energy of 2 x 6450 J. The efficiency of our module is therefore roughly 0.3 %, broadly in agreement with the expected yield of the thermoelectric generator given the obtained thermal gradients.

On the other hand, the thermoelectric generator internal resistance remains relatively constant (189 Ω) during the thermal cycle, while the open circuit output voltage may be as high as 4 V. The DC nature of the generator output, its relatively high amplitude together with its low output resistance, favor the efficiency of the energy transfer from the generator to the storage element, the only issue being the change of polarity of the output during the flight (see Fig. 2).

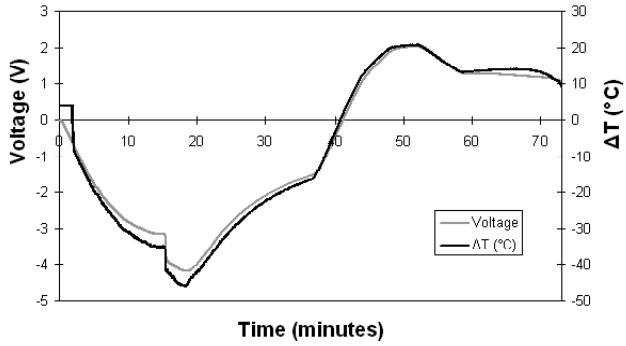

Fig. 2: Thermal gradient and output voltage vs. time for the flight of Fig. 1 (experimental).

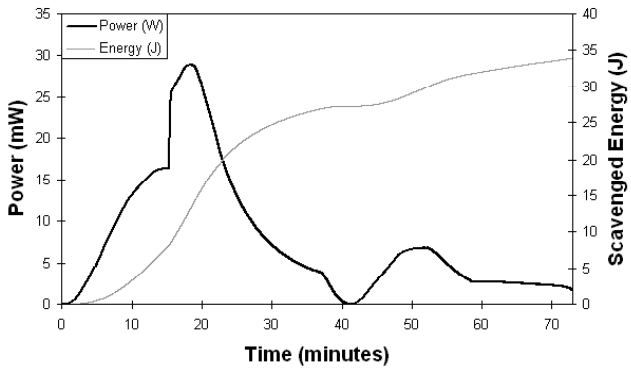

Fig. 3: Power and energy vs. time for the flight of Fig.1 (experimental).

3. STORAGE OF SCAVENGED ENERGY

To get rid of the cost (in terms of energy loss) of energy storage, immediate use of captured environmental energy by the WSN node management system would be preferable, as a fraction of the scavenged energy is likely to be lost through parasitic resistors and self-discharge during storage. Unfortunately, it is very likely that the WSN node will not by-pass the energy-storage device, even for immediate usage, but will use it as an energy buffer. Additionally, energy long-term storage may be desired to budget for future energy consumption when scavenging efficiency would be low. A power-conditioning circuit sitting between the power source and the load is therefore required. In our application

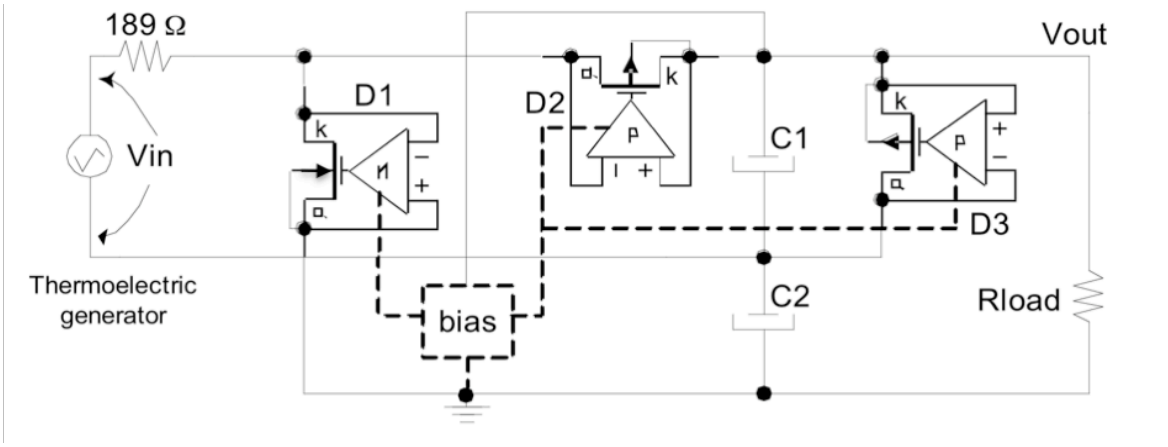

Fig. 4: Schematic of the proposed voltage booster - a: anode, k: cathode, N/P: N/P-type differential amplifiers, C1 and C2: storage capacitors, total bias current is 530 nA (simulation).

context, the use of a battery being unlikely, electrical double-layer capacitors, also named super-capacitors or ultra-capacitors, may be the support of transient storage.

As it can be seen from Fig. 2, the output voltage is alternatively positive and negative depending upon flight phase. Consequently, to efficiently transfer the captured electrical energy to the super-capacitors, we designed a dedicated self-biased voltage rectifier / booster circuit, using MOS-based active diodes to reduce losses (Fig.4).

SPICE simulation results, based on a 0.35 µm CMOS technology show that the active diode threshold voltages can be as low as 10 mV, the charging of the supercapacitors starts 2 min after take off (time required for self-bias activation), and the capacitors voltage value of 1V required to start the DC-DC regulator (not shown in fig. 4) operation is reached after 9 min (Fig.5).

4. CONCLUSION

Aircraft structural health monitoring by WSN is a key tool both to reduce inspection costs, and to increase safety. For such a self-powered network, energy is a critical issue, as it is for most WSN, and hardware design must use energy as a starting point. However, considering the aeronautical application presented above, it has been shown that energy scavenging from the transient thermal gradients taking place during the flight may be of great interest. The benefits first comes from the amount of captured electrical energy which favorably compares with alternative harvesting or scavenging techniques, secondly in the fact that most of the scavenged energy is available at the beginning of the flight, and finally in the easy use of the generator electrical output.

However, this method needs to be compared or combined with other solutions for energy harvesting (capture of energy from aircraft structure mechanical vibrations, from acoustic power, and from aircraft static electricity dischargers) or other energy scavenging methods such as the use of atmospheric pressure variations.

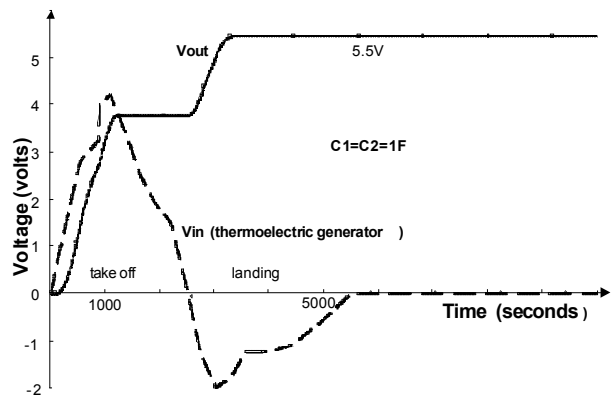

Fig. 5: Input and output voltages vs. time of the voltage booster for the flight of Fig.1 (open load - simulation).

ACKNOWLEDGMENTS

The authors would like to thank Fondation de Recherche pour l'Aéronautique et l'Espace for financial support and Airbus-Toulouse, especially Jean Pierre Daniel, for technical support.

REFERENCES

[1] B. Mitchell, "Energy Harvesting Applications and architectures at Boeing commercial airplanes", presented at nanoPower Forum, San Jose, 2007.

[2] A. Chandrakasan et al., "Design considerations for distributed microsensor systems, in *Proc. IEEE Custom Integrated Circuits Conf.*, May 1999, pp. 279-286..

[3] Hi-Z Technology, http://www.hi-z.com

[4] Micropelt, http://www.micropelt.com/products /thermogenerator.php

[5] F. A. Leavitt, N. B. Elsner, J. C. Bass, "Use, application and testing of Hi-Z thermoelectric modules," *Application note,* Hi-Z Technology.