HAL open science

# Model and robust control of an electropneumatic actuator on an experimental setup

Alexis Girin, Franck Plestan, Xavier Brun, Alain Glumineau, Mohamed Smaoui

## To cite this version:

Alexis Girin, Franck Plestan, Xavier Brun, Alain Glumineau, Mohamed Smaoui. Model and robust control of an electropneumatic actuator on an experimental setup. 7th IFAC Symposium on Nonlinear Control Systems (NOLCOS'07), Aug 2007, Pretoria, South Africa. pp.1004-1009, 10.3182/20070822-3-ZA-2920.00167 . hal-00373588

**HAL Id: hal-00373588**

**https://hal.science/hal-00373588v1**

Submitted on 9 Apr 2019

**HAL** is a multi-disciplinary open access archive for the deposit and dissemination of scientific research documents, whether they are published or not. The documents may come from teaching and research institutions in France or abroad, or from public or private research centers.

L'archive ouverte pluridisciplinaire **HAL**, est destinée au dépôt et à la diffusion de documents scientifiques de niveau recherche, publiés ou non, émanant des établissements d'enseignement et de recherche français ou étrangers, des laboratoires publics ou privés.

# Model and robust control of an electropneumatic actuator experimental setup

Alexis Girin, Franck Plestan, Xavier Brun, Alain Glumineau and Mohamed Smaoui

***Abstract*— This paper presents an electropneumatic system and its high-precision position control based on an original $3^{rd}$ order sliding mode controller. The structure of the experimental set-up and the benchmark on which the controller is evaluated have been designed in order to check the use of a such actuator. The higher order sliding mode controller is designed in order to ensure finite time convergence, high accuracy (higher than "standart" sliding mode) and robustness. Experimentals results display the feasability and the performance of the controller.**

**Keywords: electropneumatic system, higher order sliding mode, accuracy, robustness.**

NOMENCLATURE

| | |
|---|---|
| $y, v, a$ | position, velocity and acceleration of the actuator $[m][m/s][m/s^2]$ |
| $y_d, v_d, a_d, j_d$ | desired position, velocity, acceleration and jerk $[m][m/s][m/s^2][m/s^3]$ |
| $p_X$ | pressure in the chamber $X$ $[Pa]$ |
| $u_P, u_N$ | servodistributors voltages $[V]$ |
| $k$ | polytropic constant |
| $K_r$ | springs rates $[N/m]$ |
| $V_X$ | chamber $X$ volume $[m^3]$ |
| $b_v$ | viscous friction coefficient $[N/m/s]$ |
| $F_f$ | friction force $[N]$ |
| $M$ | total moving load mass $[kg]$ |
| $T$ | Supply and chamber temperature $[K]$ |
| $r$ | perfect gas constant $[J/kg/K]$ |
| $S$ | piston area $[m^2]$ |
| $q_m$ | mass flow rate provided from the servo--distributor $[kg/s]$ |
| $X$ | $P$ or $N$ |
| $\gamma$ | adiabatic constant |
| $T_r$ | temperature inside an upstream tank $[K]$ |
| $\delta Q$ | thermal exchange $[J]$ |
| $\lambda$ | thermal exchange coefficient by conduction $[J/K/m^2/s]$ |
| $S_{cX}$ | total area inside $X$ chamber $[m^2]$ |
| $T_{cX}$ | temperature of the $X$ chamber wall $[K]$ |
| $q_{mX_{in}}/q_{mX_{out}}$ | mass flow rate brought inside/outside of a chamber $[kg/s]$ |
| $t_F$ | fixed time convergence $[s]$ |

## I. INTRODUCTION

The use of pneumatic actuators is a solution for high accuracy positionning problem viewed their advantages (law maintenance cost, lightweight and good force/weight ratio) in spite of their traditional drawbacks (friction, variation of the actuators dynamics with respect to load and piston position along the cylinder stroke, nonlinearities, ...). The current work, *i.e.* design of an experimental set-up, a nonlinear model, and a robust nonlinear control, is motivated by an aeronautic application. In fact, it consists in evaluating the performance of pneumatic actuator controller by taking into account the context: the actuator has to be slight and has to be able to develop suffisant forces, with high accuracy/dynamic performances. As it has been previously recalled, the pneumatic actuator fulfills these latter features. Then, the design of the experimental set-up (structure, mechanical features, ...) and the associated benchmark have been made in order to be as close as possible to the initial aeronautic application. The development of high-performance closed-loop linear/nonlinear controllers [18], [10], [22], [8], [12], [4], [5], [6] has shown the feasability of high-accuracy positionning of pneumatic actuator. Due to uncertainties, robust controllers are necessary to ensure position tracking with high precision. In that way, sliding mode controllers have been used for electropneumatic actuators [3], [19], [25], [24]. Their advantages are that they are simply implemented and more robust versus parameters variations and exhibit good dynamic response. However, since the sampling frequency of the controller is limited, chattering appears.

Higher order sliding mode control [16], [1], [17], [13], [14], [15], [20], [21] is a recent approach which allows to remove all the standard sliding mode restrictions, while preserving the main sliding-mode features and improving its accuracy. The both first references only concern results on second order sliding mode control, which consist in ensuring in finite time that the sliding variable and its time derivative equal 0. In [17], a general approach (which means for all sliding mode order) has been proposed: the main drawbacks of this approach are that the convergence time is only bounded, and not exactly known in advance, and that the convergence condition is not constructive. The controller proposed in [13], [20] combines standard sliding mode control with linear quadratic one over a finite time interval with a fixed final state. The algorithm needs the relative degree of the system with respect to the sliding variable $s$ and the bounds of uncertainties and has several advantages: the upper bound of the convergence time is known and can be adjusted in advance, the condition on the gain implies that its tuning is constructive, and the structure of the controller is well-adapted to practical implementations, in particular for pneumatic actuators control [14]. However, two drawbacks

A. Girin, F. Plestan and A. Glumineau are with IRCCyN, UMR 6597, Ecole Centrale de Nantes, France Alexis.Girin@irccyn.ec-nantes.fr

X. Brun and M. Smaoui are with LAI, INSA Lyon, Villeurbanne, France Xavier.Brun@insa-lyon.fr

appear in this approach. It ensures only a *practical* sliding mode establishment (only convergence in finite time to an arbitrarily small vicinity of the origin is ensured), and the reaching time is bounded but cannot be fixed *exactly* and in advance. These two drawbacks are erased (sliding variable and its time derivatives are *exactly* at 0 in finite time, and the convergence time is *a priori* well-known) in [15], [21] by keeping all the features of the previous approach (general order of sliding mode, finite time convergence, constructive approach). Results in [15] are based on integral sliding mode concept and need an auxiliary dynamic system in order to compute the switching variable. In [21], the approach, which has been selected for this current work, is more simple than the previous one and consists in computing adequate reference trajectories which ensures that the higher order sliding mode is established at the desired time, in spite of uncertainties.

Section II describes the experimental set-up, gives the model and the assumptions, and displays the desired position trajectory. Section III recall theorical aspects of the used control approach. Section IV displays its application to pneumatic actuator system.

## II. Electropneumatic System

### A. System structure

The design of the experimental set-up has been made in order to evaluate the performances of a pneumatic actuator under a benchmark defined from *industrial* datas in aeronautics. This benchmark imposes pneumatic actuator with fast dynamics, small size and force constraints. The experimental set-up described by Figure (1) is based on the application of this benchmark.

The system includes a double-acting pneumatic actuator and two 3-way proportional valves Servotronic (Asco-Joucomatic)[1]. The pressures are between $1\ bar$ and $7\ bar$. The actuator has $63\ mm$ diameter bore, $16\ mm$ diameter rod and $50\ mm$ stroke. The two valves are interfaced through unity gain amplifiers to a PC via an analog/digital I/O board. A carriage connected to the actuator with nominal mass equal to $0.8\ kg$ is mounted on a linear slide table with minimum friction force. This carriage is coupled to 4 springs (which restrain the displacement of the carriage and restore the initial position in the middle of the total stroke - see Figure 1) for a total of $60\ N/mm$ rate. As the maximal displacement of carriage around initial position is equal to $16\ mm$, the maximal spring force is $960\ N$. Additional dry friction is controlled by two skates, with a maximum value equal to $40\ N$. The nominal dry friction has been experimentally identified and is equal to $100\ N$. Position sensor (potentiometer) is connected to the actuator rod to measure the displacement and an other potentiometer is connected to the table to measure the carriage displacement between the rod. A pressure sensor is connected to each cylinder chambers. The sensors are also interfaced to the I/O board. The control law is implanted on board and sampling frequency is $1\ kHz$. The two valves allow the charging and discharging processes for the two chambers to be controlled independently. Each valves controls charging from the supply and to the atmosphere. This 3-ways valves increase the flexibility of the system.

[1]Each valve is labeled, respectively with $P$ (for positive displacement) and $N$ (for negative displacement) Figure (1)

### B. Nonlinear model

The electropneumatic plant model is obtained from three physical laws: the mass flow rate through a restriction, the pressure behaviour in a chamber with variable volume and the fundamental mechanical equation.

**Pressure dynamics.**

Each chamber of the pneumatic actuator is considered as a variable volume, in which the air mass evolves with time. State the following assumptions:

**A1.** Air is a perfect gas ands its kinetic is inconsequential.

**A2.** The pressure and the temperature are homogeneous in each chamber.

**A3.** The mass flow is pseudo-stationary.

**A4.** The temperature variations in each chamber are inconsequential with respect to the supply temperature $T$.

The first dynamic principle applied to the air mass evolution in each chamber read as (with $X = P$ or $N$) [23]

$$\begin{aligned}\frac{\mathrm{d}p_X}{\mathrm{d}t} &= -\gamma\frac{p_X}{V_X}\frac{\mathrm{d}V_X}{\mathrm{d}t} + \frac{\gamma r T_r}{V_X}q_{mX_{in}} - \frac{\gamma r T}{V_X}q_{mX_{out}} \\ &\quad + \frac{(\gamma-1)}{V_X}\frac{\delta Q_X}{\mathrm{d}t}\end{aligned} \tag{1}$$

with $\gamma$ the adiabatic constant, $T_r$ the temperature inside the upstream tank, $q_{mX_{in}}$ the mass flow rate brought inside the $X$ chamber, and $q_{mX_{out}}$ the mass flow rate brought outside the $X$ chamber. $Q_X$, the thermal exchange with the $X$ chamber wall, is described by Assumption A5.

**A5.** The process is polytropic and characterized by coefficient *k* (with $1 < k < \gamma$) [23].

Then, pressures dynamics read as (with $X = P$ or $N$)

$$\frac{\mathrm{d}p_X}{\mathrm{d}t} = -k\frac{p_X}{V_X}\frac{\mathrm{d}V_X}{\mathrm{d}t} + \frac{krT}{V_X}\left(q_{mX_{in}} - q_{mX_{out}}\right) \tag{2}$$

**A6.** The leakages between the two chambers and between servodistribuor and jack are negligible.

By defining $q_m(u_X, p_X) := q_{mX_{in}} - q_{mX_{out}}$, one gets

$$\begin{aligned}\frac{\mathrm{d}p_P}{\mathrm{d}t} &= -k\frac{p_P}{V_P(y)}\frac{\mathrm{d}V_P(y)}{\mathrm{d}t} + \frac{krT}{V_P(y)}q_m(u_P, p_P) \\ \frac{\mathrm{d}p_N}{\mathrm{d}t} &= -k\frac{p_N}{V_N(y)}\frac{\mathrm{d}V_N(y)}{\mathrm{d}t} + \frac{krT}{V_N(y)}q_m(u_N, p_N)\end{aligned} \tag{3}$$

**A7.** Dynamic part of servodistributor is neglected, and mass flow rate has been identified by the following function

$$q_m(u_X, p_X) = \varphi(p_X) + \psi(p_X, \mathrm{sign}(u_X))\, u_X$$

with $\varphi$ and $\psi$ defined as $5^{th}$-order polynomials with respect to $p_X$ [2].

**A8.** Only the position of the actuator is controlled, which means that the problem is a single input-single output (SISO). It implies that $u_P = -u_N = u$.

**Mechanical model.**

**A9.** All dry frictions forces are neglected.

The second Newton law gives

$$\begin{aligned} \frac{\mathrm{d}v}{\mathrm{d}t} &= \frac{1}{M}\left[S\left(p_P - p_N\right) - b_v v - K_r y\right] \\ \frac{\mathrm{d}y}{\mathrm{d}t} &= v \end{aligned} \tag{4}$$

Then, with $V_P(y) = V_0 + S \cdot y$ and $V_N(y) = V_0 - S \cdot y$ ($V_0$ being equal to the half of the cylinder volume), from Equations (3)-(4) and Assumptions A7-A8, one gets a nonlinear system

$$\begin{aligned} \dot{p}_P &= \frac{krT}{V_P(y)}[\varphi\left(p_P\right) + \psi\left(p_P, \mathrm{sign}\left(u\right)\right)u - \frac{S}{rT}p_P v] \\ \dot{p}_N &= \frac{krT}{V_N(y)}[\varphi\left(p_N\right) - \psi\left(p_N, \mathrm{sign}\left(-u\right)\right)u + \frac{S}{rT}p_N v] \\ \dot{v} &= \frac{1}{M}[Sp_P - Sp_N - b_v v - K_r y] \\ \dot{y} &= v \end{aligned} \tag{5}$$

### C. Desired trajectory

The desired position trajectory, displayed in Figure 2 and named $y_d(t)$, has been designed such that associated velocity and acceleration are continuous functions. The maximum velocity (resp. acceleration) is $0.8\ m \cdot s^{-1}$ (resp. $33\ m \cdot s^{-2}$). This displacement corresponds to 64% of the total stroke around the central position. The initial conditions are such that $[y_d(0)\ v_d(0)\ \dot{v_d}(0)]^T = [0.016\ 0\ 0]^T$.

## III. High order sliding mode controller

The use of assumptions for the model design implies that, if a high accuracy in position control is the objective, a robust control law with respect to uncertainties (frictions, mass flow rate, temperature variations, ...) and perturbations (mass variation, ...) is required. Then, from [21], a high order sliding mode controller is derived. Its main features are robustness, finite time convergence and high performances in term of accuracy. In the sequel, theorical aspects on this control for approach and the application to the pneumatic system are displayed.

### A. Problem formulation

Consider an uncertain nonlinear system

$$\begin{aligned} \dot{x} &= f(x,t) + g(x,t)u \\ y &= s(x,t) \end{aligned} \tag{6}$$

where $x \in I\!R^n$ is the state variable, $u \in I\!R$ is the input control and $s(x,t) \in I\!R$ is a measured smooth output function (sliding variable) defined to satisfy the control objectives. $f(x,t)$ and $g(x,t)$ are uncertain smooth functions. Assume that

**H1.** The relative degree $r$ of (6) with respect to $s$ is assumed to be constant and known, and the associated zero dynamics are stable. ■

*The control objective is to fulfill the constraint $s(x,t) = 0$ in finite time and to keep it exactly by discontinuous feedback control.*

**Definition 1:** [17] Consider the nonlinear system (6), and let the system be closed by some possibly-dynamical discontinuous feedback. Then, provided that[2] $s, \dot{s}, \cdots, s^{(r-1)}$ are continuous functions, and the set

$$\mathbf{S}^r = \{x \mid s(x,t) = \dot{s}(x,t) = \cdots = s^{(r-1)}(x,t) = 0\},$$

called "$r^{th}$ order sliding set", is non-empty and is locally an integral set in the Filippov sense [9], the motion on $\mathbf{S}^r$ is called "$r^{th}$ order sliding mode" with respect to the sliding variable $s$. ■

The $r^{th}$ order sliding mode control approach allows the finite time stabilization to zero of the sliding variable $s$ and its $r-1$ first time derivatives by defining a suitable discontinuous control function. Extend system (6) by introduction of a fictitious variable $x_{n+1} = t,\ \dot{x}_{n+1} = 1$. Denote $f_e = (f,1)^T, g_e = (g,0)^T$ where the last component corresponds to $x_{n+1}$. The output $s$ satisfies the equation

$$s^{(r)} = \chi(\cdot) + \Gamma(\cdot)u \tag{7}$$

with[3] $\Gamma = L_{g_e} L_{f_e}^{r-1} s$ and $\chi = L_{f_e}^r s$ that

**H2.** The solutions are understood in the Filippov sense [9], and system trajectories are supposed to be infinitely extendible in time for any bounded Lebesgue measurable input.

**H3.** Functions $\chi(\cdot)$ and $\Gamma(\cdot)$ are bounded uncertain functions, and, without loss of generality, let also the sign of the control gain $\chi$ be constant and strictly positive. Thus, there exist $K_m \in I\!R^{+*}$, $K_M \in I\!R^{+*}$, $C_0 \in I\!R^+$ such that

$$0 < K_m < \Gamma < K_M \quad |\chi| \leq C_0. \tag{8}$$

for $x \in \mathbf{X} \subset I\!R^n$, $\mathbf{X}$ being a bounded open subset of $I\!R^n$ within which the boundedness of the system dynamics is ensured.

Note $Z_1 = [Z_1^0\ Z_1^1\ \cdots\ Z_1^{r-2}]^T := [s\ \dot{s}\ \cdots\ s^{(r-2)}]^T$, $Z_2 = s^{(r-1)}$. Then, the $r^{th}$ order sliding mode control of (6) with respect to the sliding variable $s$ is equivalent to the finite time stabilization of

$$\begin{aligned} \dot{Z}_1 &= A_{11}Z_1 + A_{12}Z_2 \\ \dot{Z}_2 &= \chi + \Gamma u \end{aligned} \tag{9}$$

[2]All over this paper, $s(\cdot)^{(k)}$ ($k \in I\!N$) denotes the $k^{th}$ time derivative of the function $s(\cdot)$. This notation is also applied for every function.

[3]Given $a(x)$ a real-valued function and $b(x)$ a vector field, both defined on $\mathbf{X} \subset I\!R^n$, the derivative of $a(\cdot)$ along $b(\cdot)$ is written as $L_b a$ and is defined as $L_b a = \frac{\partial a}{\partial x} b(x)$ [11].

which satisfies the global boundedness conditions (8), where $A_{11}$ and $A_{12}$ are defined by

$$\begin{aligned} A_{11} &= \begin{bmatrix} 0 & 1 & \dots & 0 & \dots \\ \vdots & \ddots & \ddots & \ddots & \ddots \\ \vdots & \ddots & \ddots & \ddots & \ddots \\ 0 & \ddots & \ddots & \dots & 1 \\ 0 & \ddots & \ddots & \ddots & 0 \end{bmatrix}_{(r-1)\times(r-1)} \\ A_{12} &= \begin{bmatrix} 0 & \cdots & 0 & 0 & 1 \end{bmatrix}^T_{(r-1)\times 1}. \end{aligned} \tag{10}$$

*B. Synthesis of high order sliding mode controller*

The synthesis of a high order sliding mode controller for (6) is made through the following idea: switching variable is defined such that the system evolves, *early from* $t = 0$, on a switching manifold. Furthermore the sliding variable and its time derivatives reach the origin in finite time in spite of uncertainties thanks to discontinuous control input. The design of the controller consists in two steps:

- Design of the switching variable for system (9),
- Design of a discontinuous control input $u$ maintaining the system trajectories on a switching manifold which ensures the establishment of a $r^{th}$ order sliding mode, in spite of uncertainties.

**Switching variable.** Let $S$ denote the switching variable defined as

$$\begin{aligned} S &= s^{(r-1)} - \mathcal{F}^{(r-1)}(t) + \lambda_{r-2}\left[s^{(r-2)} - \mathcal{F}^{(r-2)}(t)\right] \\ &\quad + \cdots + \lambda_0\left[s(x,t) - \mathcal{F}(t)\right], \end{aligned} \tag{11}$$

with $\lambda_{r-2}, \cdots, \lambda_0$ defined such that $P(z) = z^{(r-1)} + \lambda_{r-2}z^{(r-2)} + \cdots + \lambda_0$ is a Hurwitz polynomial in the complex variable $z$. The function $\mathcal{F}(t)$ is a $C^r$-one defined such that $S(t=0) = 0$ and $s^{(k)}(x(t_F), t_F) - \mathcal{F}^{(k)}(t_F) = 0$ ($0 \le k \le r-1$). Then, from initial and final conditions the problem consists in finding the function $\mathcal{F}(t)$ such that

$$\begin{aligned} & s(x(0),0) = \mathcal{F}(0), && s(x(t_F),t_F) = \mathcal{F}(t_F) = 0, \\ & \dot{s}(x(0),0) = \dot{\mathcal{F}}(0), && \dot{s}(x(t_F),t_F) = \dot{\mathcal{F}}(t_F) = 0, \\ & \vdots \\ & s^{(r-1)}(x(0),0) &=& \mathcal{F}^{(r-1)}(0), \\ & s^{(r-1)}(x(t_F),t_F) &=& \mathcal{F}^{(r-1)}(t_F) = 0 \end{aligned} \tag{12}$$

A solution for $\mathcal{F}(t)$ reads as ($1 \le j \le r$) [21]

$$\mathcal{F}(t) = Ke^{Ft}Ts^{(r-j)}(0) \tag{13}$$

with $F$ a $2r \times 2r$-dimensional stable matrix (strictly negative eigenvalues) and $T$ a $2r \times 1$-dimensional vector.
**H4.** The integer $j$ is such that $s^{(r-j)}(0) \neq 0$ and bounded.

$K$ is a $1 \times 2r$-dimensional gain matrix tuned such system (12) is fulfilled. Then, one gets

$$\begin{aligned} K &= \left[s^{(r-1)}(0) \;\; 0 \;\; s^{(r-2)}(0) \;\; 0 \;\; \cdots \;\; s(0) \;\; 0\right] \cdot \\ &\quad \underbrace{\begin{bmatrix} F^{r-1}Ts^{(r-j)}(0) \\ F^{r-1}e^{Ft_F}T \\ F^{r-2}Ts^{(r-j)}(0) \\ F^{r-2}e^{Ft_F}T \\ \vdots \\ Ts^{(r-j)}(0) \\ e^{Ft_F}T \end{bmatrix}^{T^{-1}}}_{\mathcal{K}} \end{aligned} \tag{14}$$

with
**H5.** Matrices $F$ and $T$ are such that $\mathcal{K}$ is invertible. Furthermore, matrix $F$ is stable (eigenvalues with negative real part) and the convergence $t_F > 0$ is bounded.
$F$ is a $2r \times 2r$-dimensional matrix and $T$ is a $2r \times 1$-dimensional vector.

Then, $S$ the switching variable reads as

$$\begin{aligned} S &= s^{(r-1)} - KF^{r-1}e^{Ft}Ts^{(r-j)}(0) \\ &\quad + \lambda_{r-2}\left[s^{(r-2)} - KF^{r-2}e^{Ft}Ts^{(r-j)}(0)\right] \\ &\quad + \cdots + \lambda_0\left[s(x,t) - Ke^{Ft}Ts^{(r-j)}(0)\right], \end{aligned} \tag{15}$$

**H6.** There exists a finite positive constant $\Theta \in I\!R^+$ such that

$$\begin{aligned} & \big|KF^r e^{Ft}Ts^{(r-j)}(0) - \lambda_{r-2}\left[s^{(r-1)} - \right. \\ & \left. KF^{r-1}e^{Ft}Ts^{(r-j)}(0)\right] - \cdots \\ & -\lambda_0\left[\dot{s}(x,t) - KFe^{Ft}Ts^{(r-j)}(0)\right]\big| \quad < \quad \Theta \end{aligned} \tag{16}$$

Equation $S = 0$ describes the desired dynamics which satisfy the finite time stabilization of vector $[s^{(r-1)} \; s^{(r-2)} \; \dots \; s]^T$ to zero. Then, the *switching manifold* on which system (9) is forced to slide on via a discontinuous control $v$, is defined as

$$\mathcal{S} = \{x \mid S = 0\} \tag{17}$$

Given equation (12), one gets $S(t=0) = 0$: at the initial time, the system still evolves on the switching manifold. There is no reaching phase in opposition to previous approaches as [13], [14].

**Controller design.** The attention is now focused on the design of the discontinuous control law $u$ which forces the system trajectories of (9) to slide on $\mathcal{S}$, to reach in finite time the origin and to maintain the system at the origin.

**Theorem 1:** [21] Consider the nonlinear system (6) with a relative degree $r$ with respect to $\sigma(x,t)$. Suppose that it is minimum phase and that hypotheses $H_1$, $H_2$, $H_3$ and $H_4$ are fulfilled. Let $r$ be the sliding mode order and $0 < t_F < \infty$ the desired convergence time. Define $S \in I\!R$ by (15) with $K$ unique solution of (13) given by (14) and that assumption H5 is fulfilled. The control input $u$ defined by

$$u = -\alpha \,\mathrm{sign}(S) \tag{18}$$

with

$$\alpha \ge \frac{C_0 + \Theta + \eta}{K_m}, \tag{19}$$

$C_0$, $K_m$ defined by (8), $\Theta$ defined by (16), $\eta > 0$, leads to the establishment of a $r^{th}$ order sliding mode with respect to $\sigma$. The convergence time is $t_F$. ■

**Sketch of proof.** Condition (19) allows to satisfy the $\eta$-attractivity condition $\dot{S}S \leq -\eta|S|$. For more details see [21].

## IV. Application on experimental setup

### A. Controller design

The objective consists in designing a robust (with respect to uncertainties/disturbances) position controller. Define $s$ the sliding variable as $s = y - y_d(t)$: from (5), its relative degree with respect to $u$ equals 3, which implies that a $3^{rd}$ order sliding mode controller is designed. One has

$$s^{(3)} = \chi(\cdot) + \Gamma(\cdot)u \tag{20}$$

with $\bar{T} = T + \Delta T$, $\bar{\varphi} = \varphi + \Delta\varphi$, $\bar{\psi} = \psi + \Delta\psi$, $\bar{M} = M + \Delta M$[4], where $\Delta T$, $\Delta\varphi$ $\Delta\psi$, $\Delta M$ represent the uncertainties. For nominal case this uncertainties are null. Furthermore

$$\begin{aligned}
\chi(\cdot) &= \tfrac{kr\bar{T}S}{\bar{M}}\left(\tfrac{\bar{\varphi}(p_P)}{V_P(y)} - \tfrac{\bar{\varphi}(p_N)}{V_N(y)}\right) - \tfrac{kS^2v}{\bar{M}}\left(\tfrac{p_P}{V_P(y)} - \tfrac{p_N}{V_N(y)}\right) \\
&- \tfrac{b_v}{\bar{M}^2}\left(S\left(p_P - p_N\right) - b_v v - K_r y\right) - \tfrac{K_r v}{\bar{M}} - y_d^{(3)} \\
\Gamma(\cdot) &= \tfrac{kr\bar{T}S}{\bar{M}}\left(\tfrac{\bar{\psi}(p_P, sign(u))}{V_P(y)} + \tfrac{\bar{\psi}(p_N, sign(-u))}{V_N(y)}\right)
\end{aligned} \tag{21}$$

The control law is defined as[5] $u = \Gamma_{nom}^{-1} \cdot [-\chi_{nom} + w]$ with $\Gamma_{nom}$ (resp. $\chi_{nom}$) the nominal value of $\Gamma$ (resp. $\chi$), *i.e.* derived from (21) with no uncertainties. It is important to note that $\Gamma_{nom}$ is always strictly positive. So $u$ has the same sign as $(-\chi_{nom} + w)$. From (20), $\chi_{nom}$ and $w$ are independent of $u$. Then, one gets

$$s^{(3)} = \bar{\chi}(\cdot) + \bar{\Gamma}(\cdot)w \tag{22}$$

with $\bar{\chi} = \chi - \Gamma\Gamma_{Nom}^{-1}\chi_{Nom}$ and $\bar{\Gamma} = \Gamma\Gamma_{Nom}^{-1}$. Let $z = [s \quad \dot{s} \quad \ddot{s}]^T$. As introduced in Section III, the design follows two steps. The first consists in computing off-line matrix $K$ in order to determine the function $\mathcal{F}(t)$. This latter and their time derivatives are computed on-line in order to ensure the convergence of $s$, $\dot{s}$, and $\ddot{s}$ to 0 at a fixed time $t_F$. The second step is the synthesis of discontinuous control which ensures the convergence in spite of uncertainties.

**Switching variable.**
The switching variable $s$ reads as (15)

$$\begin{aligned}
S = \; & \ddot{s} - KF^2e^{Ft}Ts(0) + 2\xi\omega_n\left[\dot{s}\right. \\
& \left. -KFe^{Ft}Ts(0)\right] + \omega_n^2\left[s - Ke^{Ft}Ts(0)\right]
\end{aligned} \tag{23}$$

with $\xi = 1$, $\omega_n = 250\ rad{\cdot}s^{-1}$. Initial conditions are $\ddot{s}(0) = 0\ ms^{-2}$, $\dot{s}(0) = 0\ ms^{-1}$ and $s(0) = 0.023\ m$. From (14), one gets

$$K = [\ddot{s}(0) \;\; 0 \;\; \dot{s}(0) \;\; 0 \;\; s(0) \;\; 0]\cdot \begin{bmatrix} F^2Ts(0) \\ F^2e^{Ft_F}T \\ FTs(0) \\ Fe^{Ft_F}T \\ Ts(0) \\ e^{Ft_F}T \end{bmatrix}^{T^{-1}} \tag{24}$$

with $F$ and $T$ defined as (and fulfilling Assumption H5)

$$T = [1 \;\; 1 \;\; 1 \;\; 1 \;\; 1 \;\; 1]^T$$

$$F = \begin{bmatrix} -1 & 0 & 0 & 0 & 0 & 0 \\ 0 & -1.1 & 0 & 0 & 0 & 0 \\ 0 & 0 & -1.2 & 0 & 0 & 0 \\ 0 & 0 & 0 & -1.3 & 0 & 0 \\ 0 & 0 & 0 & 0 & -1.4 & 0 \\ 0 & 0 & 0 & 0 & 0 & -1.5 \end{bmatrix} \tag{25}$$

**Discontinuous input** $w$**.** One gets $w = -\alpha \cdot \mathrm{sign}\,(s)$ with $\alpha = 12 \cdot 10^4$ (in order to satisfy (19) by taking into account the uncertainties due to the difference of real and control models, and the variations of mass (+125%)).

### B. Experimental results

Control law has been implanted in DSPACE 1005 card with 1 ms sample time. Two kinds of test have been made. The first test, named "Nominal case", consists in moving a $0.8kg$ mass (*i.e.* the control law has been designed with this hypothesis) by tracking desired trajectories (Figure 2). The second test consists in increasing the moving mass to $1.8kg$, *without changing the structure or gains values of the controller*. For a sake of shortness, only mass modification is considered in this paper. Of course, the robustness could be evaluated with respect to other parameters (for example, additional friction by friction skates).

**Nominal case.** The actuator position (Figure 3) converges to the desired trajectory in $0.2s$ (which is the stated convergence time $t_F$). The maximum error position in steady state is $0.02mm$ in spite of springs and the mass load. There is no pressure saturation (Figure 4-Top). The control input is displayed in Figure 4-Bottom.

**Robustness evaluation.** The controller still ensures convergence in $0.2s$ without overshoot (Figure 5). The maximum position error in steady state equals $0.02mm$ which confirms the efficiency of this controller.


## Acknowledgements

This work is supported by Direction Générale de l'Armement (DGA-French Defense Ministry) through the Alexis GIRIN's Ph.D. grant.


## References


[1] G. Bartolini, A. Ferrara, and E. Usai, "Chattering avoidance by second-order sliding mode control", *IEEE Trans. Automat. Control*, vol.43, no.2, 1998, pp.241-246.


[4] It is supposed that $\frac{d\Delta M}{dt} = 0$.

[5] An interest of equivalent control is to reduce the value of discontinuous part gain [7] which implies a reduction of chattering effect.

[2] M. Belgharbi, D. Thomasset, S. Scavarda, and S. Sesmat, “Analytical model of the flow stage of a pneumatic servo-distributor for simulation and nonlinear control”, *in Scandinavian International Conference on Fluid Power SICFP’99*, Tampere, Finland, 1999, pp.847-860.

[3] M. Bouri, and D. Thomasset, “Sliding control of an electropneumatic actuator using an integral switching surface”, *IEEE Trans. Control Syst. Technology*, vol.2, no.2, 2001, pp.368-375.

[4] X. Brun, M. Belgharbi, S. Sesmat, D. Thomasset, S. Scavarda, ”Control of an electropneumatic actuator, comparison between some linear and nonlinear control laws”, *Journal of Systems and Control Engineering*, 1999, Vol. 213, NI5, p 387-406.

[5] M. Smaoui, X. Brun, D. Thomasset, ”A study on tracking position control of electropneumatic system using backstepping design”, *Control Engineering Practice*, Volume 14, Issue 8, August 2006, Pages 923-933.

[6] X. Brun, D. Thomasset, and E. Bideaux, “Influence of the process design on the control strategy: application in electropneumatic field”, *Control Engineering Practice*, vol.10, no.7, 2002, pp.727-735.

[7] R. Castro-Linares, A. Glumineau, S. Laghrouche, F. Plestan, “High order sliding mode observer-based control”, $2^{nd}$ *IFAC Symposium on System, Structure and Control*, Oaxaca, Mexico, 2004.

[8] K.A. Edge, “The control of fluid power systems - responding to the challenge”, *Journal of Systems and Control Engineering*, vol.211, no.I2, 1997, pp.91-110.

[9] A.F. Filippov, *Differential Equations with Discontinuous Right-Hand Side*, Kluwer, Dordrecht, The Netherlands, 1988.

[10] K. Hamiti, A. Voda-Besançon, and H. Roux-Buisson, “Position control of a pneumatic actuator under the influence of stiction”, *Control Engineering Practice*, vol.4, no.8, 1996, pp.1079-1088.

[11] A. Isidori, “Nonlinear control cystems: an introduction - Third edition”, Spiringer-Verlag, Berlin, Germany, 1995.

[12] T. Kimura, S. Hara, T. Fujita, and T. Kagawa, “Feedback linearization for pneumatic actuator systems with static friction”, *Control Engineering Practice*, vol.5, no.10, 1997, pp.1385-1394.

[13] S. Laghrouche, F. Plestan, and A. Glumineau, “Practical higher order sliding mode control: optimal control based approach and application to electromechanical systems”, Advances in Variable Structure and Sliding Mode Control, *Lecture Notes in Control and Information Sciences*, Springer-Verlag, Eds. Edwards C., Fossas Colet E., Fridman L., vol.334, (2006).

[14] S. Laghrouche, M. Smaoui, F. Plestan, and X. Brun, “Higher order sliding mode control based on optimal approach of an electropneumatic actuator”, *International Journal of Control*, vol.79, no.2, pp.119-131, (2006).

[15] S. Laghrouche, F. Plestan, and A. Glumineau, “Higher order sliding mode control based on integral sliding mode”, accepted to *Automatica*, 2006.

[16] A. Levant, “Sliding order and sliding accuracy in sliding mode control”, *International Journal of Control*, vol.58, no.6, 1993, pp.1247-1263.

[17] A. Levant, “Universal SISO sliding-mode controllers with finite-time convergence”, *IEEE Trans. Automat. Control*, vol. 49, no.9, 2001, pp.1447-1451.

[18] S. Ming-Chang, and T. Shy-I, “Identification and position control of a servo pneumatic cylinder”, *Control Engineering Practice*, vol.3, no.9, 1995, pp.1285-1290.

[19] A.K. Paul, J.K. Mishra, and M.G. Radke, “Reduced order sliding mode control for pneumatic actuator”, *IEEE Trans. Control Syst. Technology*, vol.2, no.3, 1994, pp.271-276.

[20] F. Plestan, S. Laghrouche, and A. Glumineau, “Multivariable practical higher order sliding mode control”, *in IEEE Conference on Decision and Control - European Control Conference CDC-ECC’05*, Sevilla, Spain, 2005,

[21] F. Plestan, S. Laghrouche, and A. Glumineau, “Robust control of uncertain nonlinear systems: a new higher order sliding mode based solution”, *in American Control Conference ACC’06*, Mineapolis, Minnesota, 2006.

[22] E. Richard, and S. Scavarda, “Comparison between linear and lonlinear control of an electropneumatic servodrive”, *J. of Dynamic Systems, Measurement, and Control*, vol.118, 1996, pp.245-252.

[23] J.L. Shearer, “Study of pneumatic processes in the continuous control of motion with compressed air”, *Trans. Am. Soc. Mech. Eng.*, vol.78, 1956, pp.233-249.

[24] M.Smaoui, X.Brun, D. Thomasset, “A combined first and second order sliding mode approach for position and pressure control of an electropneumatic system”, *in American Control Conference ACC’05*, Portland, Oregon, 2005.

[25] L. Yang, and J.H. Lilly, “Sliding mode tracking for pneumatic muscle actuators in bicep/tricep pair configuration”, *in American Control Conference ACC’03*, Denver, Colorado, 2003.

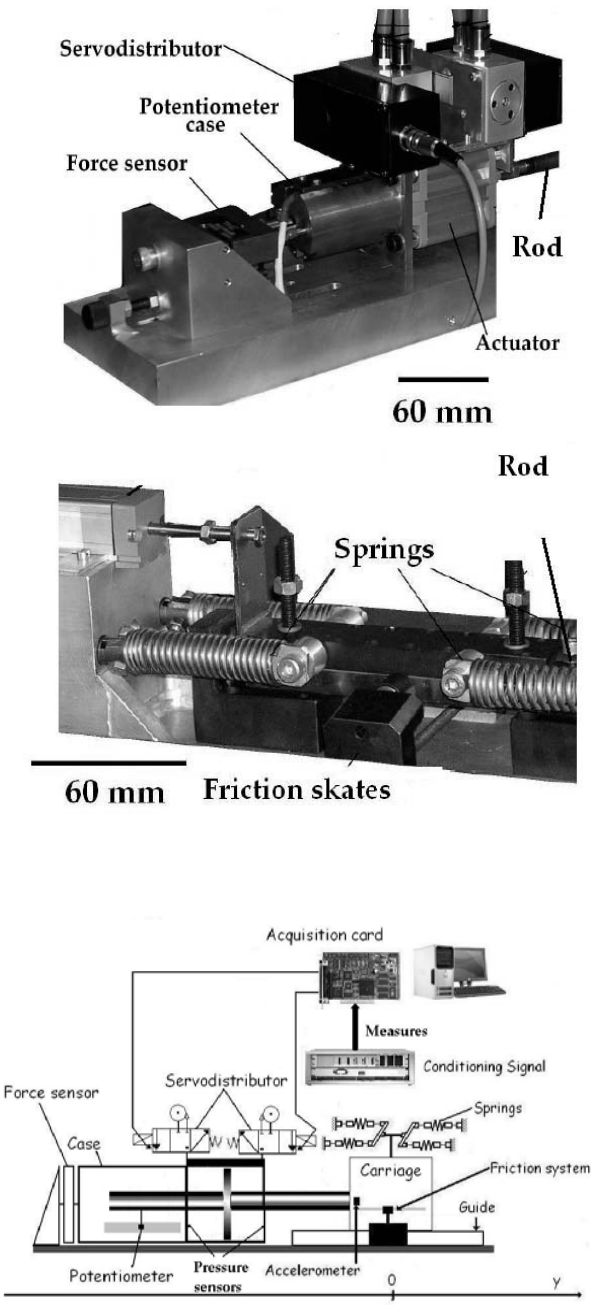


Fig. 1. Top: Photo of the experimental set-up mechanical part - Bottom: Scheme of the exprimental set-up

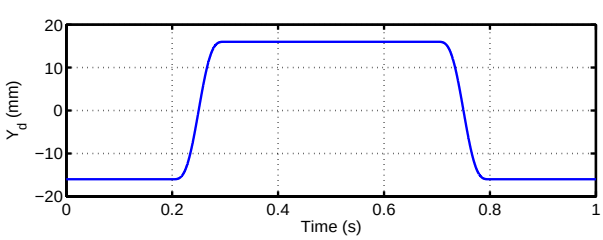


Fig. 2. Desired position trajectory $y_d(t)$ $(m)$ versus time $(sec.)$

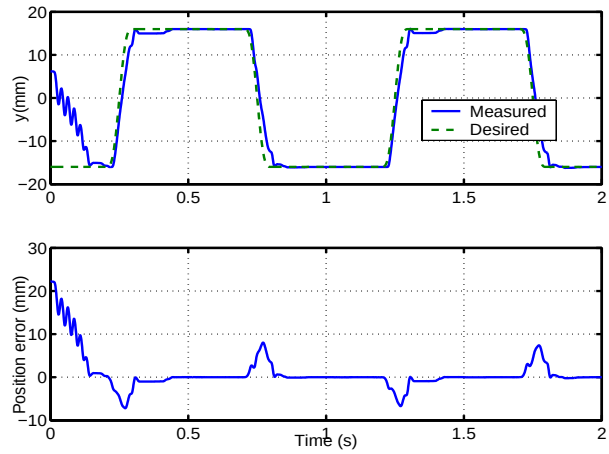


Fig. 3. **Top.** Desired and current positions $(mm)$ versus time $(sec)$. **Bottom.** Positions errors $(mm)$ versus time $(sec)$.

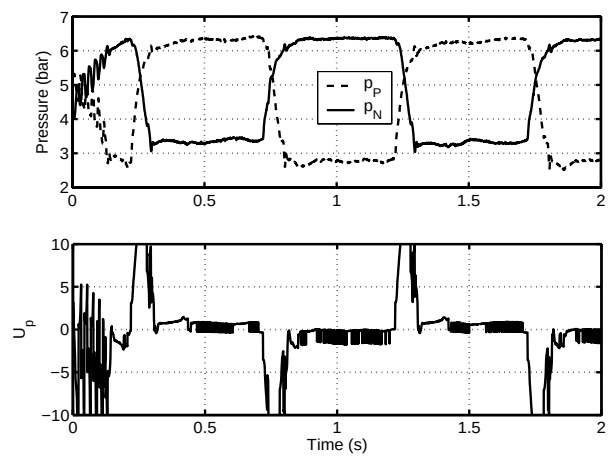


Fig. 4. **Top.** Pressures ($p_P$ and $p_N$) $(bar)$ versus time $(sec)$. **Bottom.** $U_p$ $(V)$ versus time $(sec)$.

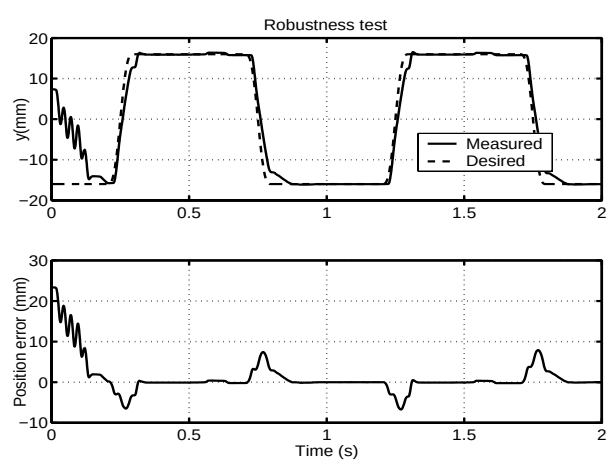


Fig. 5. **Top.** Desired and current positions $(mm)$ versus time $(sec)$. **Bottom.** Positions errors $(mm)$ versus time $(sec)$.