HAL
open science

Vacuum squeezed light for atomic memories at the D2 cesium line

Sidney Burks, Jérémie Ortalo, Antonino Chiummo, Xiaojun Jia, Fabrizio Villa, Alberto Bramati, Julien Laurat, Elisabeth Giacobino

To cite this version:

Sidney Burks, Jérémie Ortalo, Antonino Chiummo, Xiaojun Jia, Fabrizio Villa, et al.. Vacuum squeezed light for atomic memories at the D2 cesium line. Optics Express, 2009, 17 (5), pp.3777. 10.1364/OE.17.003777 . hal-00347024v2

HAL Id: hal-00347024

https://hal.science/hal-00347024v2

Submitted on 24 Feb 2009

HAL is a multi-disciplinary open access archive for the deposit and dissemination of scientific research documents, whether they are published or not. The documents may come from teaching and research institutions in France or abroad, or from public or private research centers.

L'archive ouverte pluridisciplinaire **HAL**, est destinée au dépôt et à la diffusion de documents scientifiques de niveau recherche, publiés ou non, émanant des établissements d'enseignement et de recherche français ou étrangers, des laboratoires publics ou privés.

Vacuum squeezed light for atomic memories at the D_2 cesium line

Sidney Burks, Jérémie Ortalo, Antonino Chiummo, Xiaojun Jia, Fabrizio Villa, Alberto Bramati, Julien Laurat, and Elisabeth Giacobino

Laboratoire Kastler Brossel, Université Pierre et Marie Curie, Ecole Normale Supérieure, CNRS, Case 74, 4 place Jussieu, 75252 Paris Cedex 05, France

elg@spectro.jussieu.fr

Abstract: We report the experimental generation of squeezed light at 852 nm, locked on the Cesium D_2 line. 50% of noise reduction down to 50 kHz has been obtained with a doubly resonant optical parametric oscillator operating below threshold, using a periodically-poled KTP crystal. This light is directly utilizable with Cesium atomic ensembles for quantum networking applications.

© 2009 Optical Society of America

During the last two decades, a great effort has been dedicated to the generation of non-classical states of light in the continuous variable regime. Very recently, 10 dB of noise reduction was obtained with the goal of surpassing the standard quantum limit for sensitive measurements such as gravitational wave detection [1]. Driven by the prospect of interfacing light and matter for quantum networking applications[2, 3, 4], ongoing efforts have also focused on the generation of squezeed light at atomic wavelengths and reaching low noise frequencies to be comptatible with bandwidth-limited interfacing protocols. Results have been obtained on the rubidium D_1 line[5, 6] and squeezed light has been recently stored[7, 8]. Squeezing resonant with the cesium D_2 line was demonstrated already a while ago in connection with sub-shot noise spectroscopy experiments [9, 10] but not at low-frequency sidebands. More recently, low-frequency squeezing was finally reported at this wavelength [11], however without giving spectrum behavior in this range. Here, we give detailed measurements of such squeezing, demsontrating a broadband noise reduction in the low-frequency domain. Furthermore, our setup shows the first usage of a PPKTP crystal for creating squeezed light at 852nm. This limits the generally observed losses caused by blue light induced infrared absorption, which are the limiting factor for squeezed light generation.

The experimental setup is sketched in Fig. 1. A continuous-wave Ti:Sapphire laser (Spectra Physics-*Matisse*) locked on the cesium D_2 line is frequency-doubled in a bow-tie cavity with a type-I 20 mm long periodically-poled KTP crystal (PPKTP, Raicol Crystals Ltd.) [12], and locked by tilt-locking[13]. By supplying 600 mW of light at 852 nm, we obtain 200 mW of 426 nm cw-light. Higher doubling efficiency can be obtained but with lower stability due to thermal effects. This beam pumps a 550 mm long doubly-resonant (signal and idler) optical parametric oscillator (OPO), based on a 20 mm long PPKTP crystal. The OPO is locked at resonance using the Pound-Drever-Hall technique [14] (20 MHz phase modulation), thanks to a 8 mW additional beam injected through a HR mirror and propagating in the opposite direction of the pump beam. The crystal temperatures are actively controlled, with residual oscillation of the order of few mK. Both cavities have the same folded-ring design. The crystals are placed between high-reflecting mirrors with a radius of curvature R=100 mm for the OPO, and R=150 mm for the doubler while the other mirrors are flat. The input mirror for the doubler has a transmission of 12%, and the output mirror for the OPO of 7%. The folding angles are around 10°, with

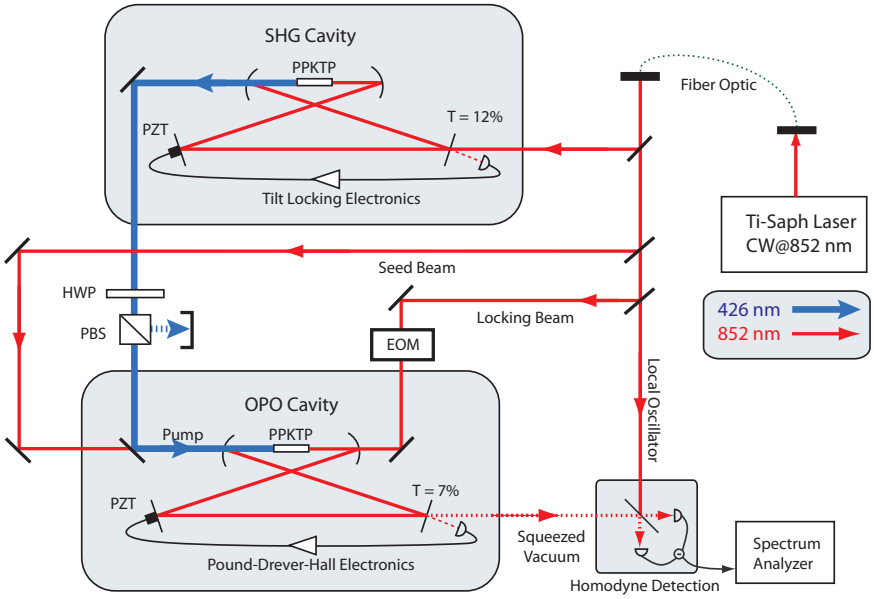

Fig. 1. Experimental Setup. A Ti:sapphire laser locked on resonance with the Cesium D2 line is frequency doubled. The second harmonic is then used to pump a doubly resonant optical parametric oscillator below threshold. The seed beam is used for cavity alignment and blocked during measurements. HWP: Half-wave plate. EOM: electro-optic phase modulator. PZT: piezo-electric transducer. PBS: polarizing beam-splitter.

a cavity length of 55 cm. The waist inside the crystal is around 46 μm. In this configuration, the OPO threshold is measured to be 90 mW, with a degeneracy temperature at 46.3°C. The homodyne detection is based on a pair of balanced high quantum efficiency Si photodiodes (FND-100, quantum efficiency: 90%) and an Agilent E4411B spectrum analyser. The light from the Ti:Sapphire laser is used after initially being transmitted into a single mode fiber, which improves the matching of the cavities and enables a high contrast for the homodyne detection interference. The fringe visibility reaches 0.96. The shot noise level of all measurements is easily obtained by blocking the output of the OPO. Let us emphasize that the pump is matched to the OPO cavity by temporarily inserting mirrors reflective at 426 nm and thus creating a cavity resonant for the blue pump. This solution turns out to be very efficient.

Figure 2 gives the noise variances of the squeezed and anti-squeezed quadratures for a frequency spectrum from 1 to 5 MHz. The inset shows the noise variance while scanning the local oscillator phase for a fixed noise analysis frequency of 1.5 MHz. For these measurements, the blue pump power was set to 75 mW. 3 dB of squeezing is obtained, with an excess noise on the anti-squeezed quadrature around 9 dB. This noise reduction value has to be compared to the theoretical value V given by [15, 16]

$$V = 1 - \frac{T}{T+L}\frac{4\sigma}{(1+\sigma)^2 + 4\Omega^2} \tag{1}$$

where T is the output coupler transmission, L the additional intra-cavity losses due to absorption or scattering, Ω the analysis frequency normalized to the cavity bandwidth (10 MHz) and σ the amplitude pump power normalized to the threshold. By taking $\sigma = 0.9$, $\Omega = 0.1$, $T = 0.07$ and $L = 0.03$ (determined by measuring the cavity finesse and mirror transmissions) , the expected

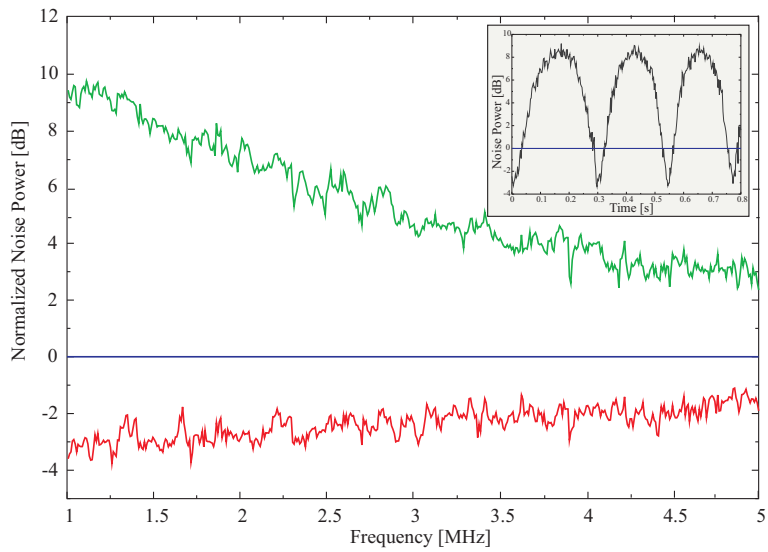

Fig. 2. Normalized noise variance for the squeezed and anti-squeezed quadratures, from 1 MHz to 5 MHz. The inset gives the noise variance at 1.5 MHz while scanning the phase of the local oscillator. The resolution bandwidth is set to 100 kHz and the video bandwidth to 100 Hz.

value before detection produced at the OPO output is -5 dB. Let us note that L is mostly due to absorption in PPKTP at this particular wavelength, as no pump-induced losses were measured. The detector quantum efficiency is estimated to be 0.90, the fringe visibility is 0.96 and the propagation efficiency is evaluated to be around 0.95. These values give an overall detection efficiency of $0.9 \cdot 0.96^2 \cdot 0.95 \simeq 0.8$. After detection, the expected squeezing is thus reduced to -3.5 dB, in good agreement with the experimental values.

Figure 3 shows the broadband noise reduction similar to the Fig. 2 insert, but now for a lower frequency range, between 0 and 500 kHz. Squeezing is expected to be higher in this range, but technical noise results in its degradation. The stability of the setup and noise of the laser are important parameters here. In particular, the lock beam power needs to be decreased as much as possible to avoid noise coupling into the device. In our setup, squeezing is finally detected down to 25 kHz, and 3 ± 0.5 dB are observed for the 100-500 kHz frequency range. Measurements are corrected from the electronic dark noise. The presence of low-frequency sideband squeezing is a requisite for future quantum networking applications such as the storage of squeezed light by EIT, where the transparency window width is a limiting factor [7, 8].

In conclusion, we have demonstrated the generation of squeezed light locked on the D_2 cesium line. More than 3 dB of noise reduction has been obtained and the squeezing is preserved for sideband frequencies down to 25 kHz. This ability opens the way to further investigations of light-matter interface using cesium atomic ensembles, like EIT or Raman storage of non-classical state of light in the continuous variable regime.

Acknowledgments

This work was supported by the French ANR under the PNANO contract IRCOQ and by the EU under the projects COVAQIAL and COMPAS. Xiaojun Jia acknowledges support from La Ville de Paris. J. Ortalo acknowledges financial support for this work from the DGA represented

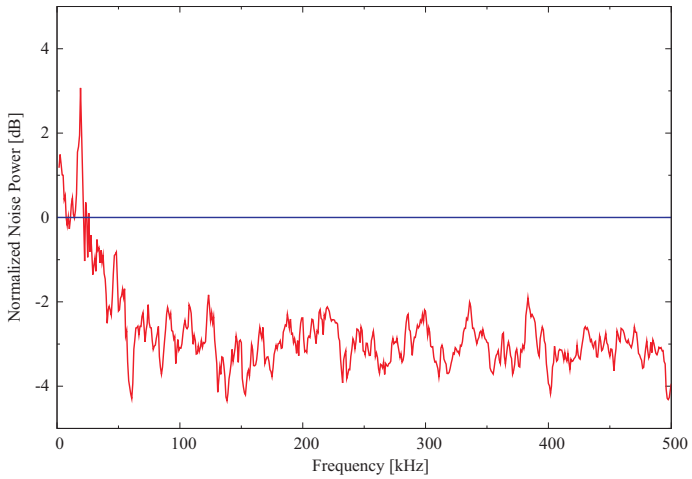

Fig. 3. Normalized noise variance up to 500 kHz after correction of the electronic noise. The resolution bandwidth is set to 30 kHz and the video bandwidth to 36 Hz.

by B. Desruelle. We would like to thank J. Cviklinski for useful discussions in the early stage of the experiment.

References and links

1. H. Vahlbruch, M. Mehmet, S. Chelkowski, B. Hage, A. Franzen, N. Lastzka, S. Goler, K. Danzmann, R. Schnabel,"Observation of Squeezed Light with 10-dB Quantum-Noise Reduction," Phys. Rev. Lett. **100**, 033602 (2008).
2. P. Zoller *et al.*, "Quantum information processing and communication, Strategic report on current status, visions and goals for research in Europe," Eur. Phys. J. D **36**, 203-228 (2005).
3. N.J. Cerf, G. Leuchs, E.S. Polzik eds, Quantum Information with Continuous Variables, (World Scientific Publishing, New Jersey, 2007).
4. H.J. Kimble, "The quantum internet," Nature **453**, 1023-1030 (2008).
5. T. Tanimura, D. Akamatsu, Y. Yokoi, A. Furusawa, M. Kozuma,"Generation of squeezed vacuum resonant on a rubidium D_1 line with periodically poled KTiOPO4," Opt. Lett. **31**, 2344-2346 (2006).
6. G. Hetet, O. Glockl, K.A. Pilypas, C.C. Harb, B.C. Buchler, H.A. Bachor, P.K. Lam,"Squeezed light for bandwith-limited atom optics experiments at the rubidium D1 line," J. Phys. B: At. Mol. Opt. Phys. **40**, 221-226 (2007).
7. K. Honda, D. Akamatsu, M. Arikawa, Y. Yokoi, K. Akiba, S. Nagatsuka, T. Tanimura, A. Furusawa, M. Kozuma, "Storage and Retrieval of a Squeezed Vacuum," Phys. Rev. Lett. **100**,093601 (2008).
8. J. Appel, E. Figueroa, D. Korystov, M. Lobino, A. I. Lvovsky,"Quantum memory for squeezed light," Phys. Rev. Lett. **100**, 093602 (2008).
9. E.S. Polzik, J. Carri, H.J. Kimble,"Spectroscopy with squeezed light," Phys. Rev. Lett. **68**, 3020 (1992).
10. F. Marin, A. Bramati, V. Jost, E. Giacobino,"Demonstration of high sensitivity spectroscopy with squeezed semiconductor lasers," Optics Commun. **140**, 146 (1997).
11. J. S. Neergaard-Nielsen, B. Melholt Nielsen, C. Hettich, K. Mlmer, E. S. Polzik,"Generation of a Superposition of Odd Photon Number States for Quantum Information Networks," Phys. Rev. Lett. **97**, 083604 (2006).
12. F. Villa, A. Chiummo, E. Giacobino, A. Bramati ,"High-efficiency blue-light generation with a ring cavity with periodically poled KTP," J. Opt. Soc. Am. B **24**, 576-580 (2007).
13. D.A. Shaddock, M.B. Gray, D.E. McClelland ,"Frequency locking a laser to an optical cavity by use of spatial mode interference," Opt. Lett. **24**, 1499 (1999).
14. R. W. P. Drever, J. L. Hall, F. V. Kowalski, J. Hough, G. M. Ford, A. J. Munley and H. Ward ,"Laser phase and frequency stabilization using an optical resonator," Appl. Phys. B **31**, 97 (1983).
15. C. Fabre, S. Reynaud , in Fundamental Systems in Quantum Optics, Les Houches 1990, J. Dalibard, J. M. Raimond, J. Zinn-Justin, Eds. (Elsevier, Amsterdam, 1992)
16. H.J. Kimble, in Fundamental Systems in Quantum Optics, Les Houches 1990, J. Dalibard, J. M. Raimond, J. Zinn-Justin, Eds. (Elsevier, Amsterdam, 1992)