HAL open science

Application of the orthogonality principle to the endochronic and Mroz models of plasticity

Nelly Point, Silvano Erlicher

To cite this version:

Nelly Point, Silvano Erlicher. Application of the orthogonality principle to the endochronic and Mroz models of plasticity. Materials Science and Engineering: A, 2008, 483-484, pp.47-50. 10.1016/j.msea.2006.10.208 . hal-00345315

HAL Id: hal-00345315

https://hal.science/hal-00345315

Submitted on 9 Dec 2008

HAL is a multi-disciplinary open access archive for the deposit and dissemination of scientific research documents, whether they are published or not. The documents may come from teaching and research institutions in France or abroad, or from public or private research centers.

L'archive ouverte pluridisciplinaire **HAL**, est destinée au dépôt et à la diffusion de documents scientifiques de niveau recherche, publiés ou non, émanant des établissements d'enseignement et de recherche français ou étrangers, des laboratoires publics ou privés.

Application of orthogonality principle to Endochronic and Mróz models

Nelly Point [a,b,*] , Silvano Erlicher [a]

[a] *Laboratoire Analyse des Matériaux et Identification LAMI (ENPC/LCPC-Institut Navier), 6 et 8 av. B. Pascal, Cité Descartes, Champs-sur-Marne, 77455 Marne-la-Vallée, Cedex 2, France*

[b] *Conservatoire National des Arts et Métiers CNAM, Spécialité Mathématiques (442), 292 rue Saint-Martin, 75141 Paris, Cedex 03, France*

Abstract

A new description of Endochronic and Mróz model is discussed. It is based on the definition of a suitable pseudo-potential and the use of generalized normality assumption. The key-point of this formulation is the dependence of the pseudo-potentials on state variables.

Key words: Thermodynamics of solids, Endochronic theory, Generalized normality, Plasticity, Pseudo-potentials, Mróz model .

* Corresponding author. Tel: +33 1 64 15 37 40, Fax: +33 1 64 15 37 41
Email address: point@lami.enpc.fr (Nelly Point).

1 Introduction

A thermodynamically well-posed formulation of plasticity models can be based on the definition of the Helmholtz free energy and of the so-called pseudo-potential, from which the flow rules are derived from the generalized normality assumption (orthogonality principle) [1], [2], [3]. It has been proven in [4] that the use of pseudo-potentials with an additional dependence on *state variables* allows to describe classical plasticity models like Prandtl-Reuss, Non-Linear Kinematic hardening models [5] as well as generalized plasticity [6] and endochronic theory [7]. In this paper, the results concerning endochronic theory are recalled in order to expose the proposed approach and then a new description of the model of Mróz [8] is suggested.

2 Thermodynamic framework

Under the assumption of infinitesimal and isothermal transformations, the second principle of thermodynamics states that the *intrinsic* or *mechanical dissipation* Φ_1 must be non-negative:

$$\Phi_1(t) := \boldsymbol{\sigma} : \dot{\boldsymbol{\varepsilon}} - \dot{\Psi} \geq 0 \tag{1}$$

$\boldsymbol{\sigma}$ is the Cauchy stress tensor (belonging to the set $\mathbb{S}^2$ of symmetric and second-order tensors), $\Psi(\mathbf{v})$ is the Helmholtz free energy density, function of $\mathbf{v} = (\boldsymbol{\varepsilon}, \chi_1, ..., \chi_n)$, the vector containing all the state variables, namely the total strain tensor and the tensorial and/or scalar internal variables $\chi_1, ..., \chi_n$, related to the non-elastic evolution. The *non-dissipative* thermodynamic forces

are defined as:

$$\boldsymbol{\sigma}^{nd} := \frac{\partial \Psi}{\partial \boldsymbol{\varepsilon}}, \qquad \boldsymbol{\tau}_i^{nd} := \frac{\partial \Psi}{\partial \chi_i} \tag{2}$$

Let $\mathbf{q}^{nd} = \left(\boldsymbol{\sigma}_1^{nd}, \boldsymbol{\tau}_1^{nd}, ..., \boldsymbol{\tau}_n^{nd}\right)$ be the non-dissipative forces vector and $\dot{\mathbf{v}}$ be the vector of the fluxes, belonging to a vector space $\mathbb{V}$. Then, let us introduce the *dissipative* thermodynamic forces vector $\mathbf{q}^d = \left(\boldsymbol{\sigma}^d, \boldsymbol{\tau}_1^d, ..., \boldsymbol{\tau}_n^d\right)$ belonging to the dual space $\mathbb{V}^*$, with $\boldsymbol{\sigma}^d := \boldsymbol{\sigma} - \boldsymbol{\sigma}^{nd}$ and $\boldsymbol{\tau}_i^d := -\boldsymbol{\tau}_i^{nd}$. Hence, the inequality (1) can be written as follows

$$\Phi_1(t) = \boldsymbol{\sigma} : \dot{\boldsymbol{\varepsilon}} - \mathbf{q}^{nd} \cdot \dot{\mathbf{v}} = \mathbf{q}^d \cdot \dot{\mathbf{v}} \geq 0 \tag{3}$$

where the symbol $\cdot$ indicates the scalar product of two objects having the same structure [9, pg. 428]. A classical manner to ensure that (3) is fulfilled, is to assume the existence of a pseudo-potential $\phi(\dot{\mathbf{v}})$ and to impose that $\mathbf{q}^d \in \partial\phi(\dot{\mathbf{v}})$. In this article, the pseudo-potential ϕ is allowed to vary with the state variables $\mathbf{v}$. Hence, the corresponding assumption called *generalized normality*, or orthogonality principle, reads

$$\mathbf{q}^d \in \partial\phi(\dot{\mathbf{v}}'; \mathbf{v})|_{\dot{\mathbf{v}}'=\dot{\mathbf{v}}} \tag{4}$$

where ∂ indicates the sub-differential operator [10] with respect to the generic flow $\dot{\mathbf{v}}'$ and computed for $\dot{\mathbf{v}}' = \dot{\mathbf{v}}$, the actual value of the flow. Defining the dual pseudo-potential ϕ^* by the Legendre-Fenchel transform $\phi^*\left(\mathbf{q}^{d\prime}; \mathbf{v}\right) = \sup_{\dot{\mathbf{v}}\in\mathbb{V}}\left(\mathbf{q}^{d\prime} \cdot \dot{\mathbf{v}} - \phi(\dot{\mathbf{v}}; \mathbf{v})\right)$, the *dual normality condition* reads:

$$\dot{\mathbf{v}} \in \partial\phi^*\left(\mathbf{q}^{d\prime}; \mathbf{v}\right)\Big|_{\mathbf{q}^{d\prime}=\mathbf{q}^d} \tag{5}$$

Plasticity is rate independent, hence ϕ is a positively homogeneous function of order 1 with respect to the fluxes $\dot{\mathbf{v}}'$. Therefore, the dual pseudo-potential becomes $\phi^* = \mathbb{I}_{\mathbb{E}}$, the indicator function of a closed convex set $\mathbb{E}$ depending on the dissipative forces but also on the states variables. Moreover, the dissipation

reads: $\Phi_1 = \mathbf{q}^d \cdot \dot{\mathbf{v}} = \phi\left(\dot{\mathbf{v}}; \mathbf{v}\right)$.

3 A new formulation of endochronic models

Endochronic theory was first formulated by Valanis [7]. The model evolution is described by a convolution integral involving the past values of $\boldsymbol{\varepsilon}$ and a positive function μ, the *memory kernel*, depending on a positive scalar variable called *intrinsic time*. If μ is an exponential, the integral expression can be rewritten as simple differential equations. For an isotropic plastically incompressible endochronic model, they read:

$$\begin{cases} tr\left(\dot{\boldsymbol{\sigma}}\right) = 3K\ tr\left(\dot{\boldsymbol{\varepsilon}}\right) \\ \\ dev\left(\dot{\boldsymbol{\sigma}}\right) = 2G\ dev\left(\dot{\boldsymbol{\varepsilon}}\right) - \beta\ dev\left(\boldsymbol{\sigma}\right)\ \frac{\dot{\zeta}}{g(\zeta)} \end{cases} \tag{6}$$

These relationships are equivalent to

$$\boldsymbol{\sigma} = \mathbf{C} : \left(\boldsymbol{\varepsilon} - \boldsymbol{\varepsilon}^p\right), tr\left(\dot{\boldsymbol{\varepsilon}}^p\right) = 0, \dot{\boldsymbol{\varepsilon}}^p = \frac{dev\left(\boldsymbol{\sigma}\right)}{2G/\beta}\ \frac{\dot{\zeta}}{g\left(\zeta\right)}.$$

with $\mathbf{C} = \left(K - \frac{2}{3}G\right)\mathbf{1} \otimes \mathbf{1} + 2G\mathbf{I}$. The *intrinsic time flow* is given by $\dot{\vartheta} = \frac{\dot{\zeta}}{g(\zeta)}$, where ζ is the *intrinsic time scale* and with $g(\zeta) \geq 0$ and $g(0) = 1$. Generally $\dot{\zeta} = \|dev\left(\dot{\boldsymbol{\varepsilon}}\right)\|$.

The state variables and the associated non-dissipative thermodynamic forces are represented by $\mathbf{v} = (\boldsymbol{\varepsilon}, \boldsymbol{\varepsilon}^p, \zeta)$ and $\mathbf{q}^{nd} = \left(\boldsymbol{\sigma}^{nd}, \boldsymbol{\tau}^{nd}, R^{nd}\right)$ respectively. The Helmholtz free energy Ψ and the pseudo-potential are chosen as follows :

$$\Psi\left(\mathbf{v}\right) = \frac{1}{2}\left(\boldsymbol{\varepsilon} - \boldsymbol{\varepsilon}^p\right) : \mathbf{C} : \left(\boldsymbol{\varepsilon} - \boldsymbol{\varepsilon}^p\right) \tag{7}$$

$$\phi\left(\dot{\mathbf{v}}';\mathbf{v}\right)=\frac{\left\|dev\left[\mathbf{C}:\left(\boldsymbol{\varepsilon}-\boldsymbol{\varepsilon}^{p}\right)\right]\right\|^{2}}{2Gg(\zeta)/\beta}\dot{\zeta}'+\mathbb{I}_{\bar{\mathbb{D}}(\mathbf{v})}\left(\dot{\mathbf{v}}'\right)$$

$$\bar{\mathbb{D}}\left(\mathbf{v}\right)=\left\{\begin{array}{l}\left(\dot{\mathbf{v}}'\right)\in\mathbb{V}\quad tr\left(\dot{\boldsymbol{\varepsilon}}^{p'}\right)=0,\quad\dot{\zeta}'\geq 0,\\ \\ \dot{\boldsymbol{\varepsilon}}^{p'}=\frac{dev\left[\mathbf{C}:\left(\boldsymbol{\varepsilon}-\boldsymbol{\varepsilon}^{p}\right)\right]}{2Gg(\zeta)/\beta}\,\dot{\zeta}'\end{array}\right\}\tag{8}$$

The condition $tr\left(\dot{\boldsymbol{\varepsilon}}^{p'}\right)=0$ introduces the plastic incompressibility, while the third one characterizes the plastic strain flow of endochronic theory. The positivity of $\dot{\zeta}'$ guarantees the positivity of ϕ. When the generic flux variable $\dot{\mathbf{v}}'$ is equal to the actual value of the flux $\dot{\mathbf{v}}$, the first term of ϕ, in which the stress $\boldsymbol{\sigma}^{nd}=\mathbf{C}:\left(\boldsymbol{\varepsilon}-\boldsymbol{\varepsilon}^{p}\right)$ is written as a function of the state variables, is equal to the intrinsic dissipation Φ_1. To have zero viscous effect, the pseudo-potential is chosen independent from $\dot{\boldsymbol{\varepsilon}}$. This entails $\boldsymbol{\sigma}^{d}=0$. The dual pseudo-potential ϕ^* reads:

$$\phi^{*}\left(\mathbf{q}^{d\prime};\mathbf{v}\right)=\mathbb{I}_{0}\left(\boldsymbol{\sigma}^{d'}\right)+\mathbb{I}_{\mathbb{E}}\left(\boldsymbol{\tau}^{d'},R^{d'};\mathbf{v}\right)\tag{9}$$

with $\mathbb{E}=\left\{\left(\boldsymbol{\tau}^{d'},R^{d'}\right)\in\mathbb{S}^{2}\times\mathbb{R}\ /\ \ f\leq 0\right\}$, and

$$\begin{aligned}f\left(\boldsymbol{\tau}^{d'},R^{d'};\mathbf{v}\right)=&\frac{dev\left(\boldsymbol{\tau}^{d'}\right):dev\left[\mathbf{C}:\left(\boldsymbol{\varepsilon}-\boldsymbol{\varepsilon}^{p}\right)\right]}{2Gg(\zeta)/\beta}\\ &-\frac{\left\|dev\left[\mathbf{C}:\left(\boldsymbol{\varepsilon}-\boldsymbol{\varepsilon}^{p}\right)\right]\right\|^{2}}{2Gg(\zeta)/\beta}+R^{d'}\end{aligned}\tag{10}$$

The expression (10) defines the *loading function of endochronic models*. In Figure 1 the set $\mathbb{E}$ is represented in the $\left(\boldsymbol{\tau}^{d'},R^{d'}\right)$ space together with the projection $\mathbb{D}$ of the effective domain $\bar{\mathbb{D}}$ when $g\left(\zeta\right)=1$. As the system evolves, both sets change, due to their dependence on the internal variables. At every instantaneous configurations, the set $\mathbb{D}$ is a straight line starting from the origin. The corresponding sets $\mathbb{E}$ are half-planes orthogonal to $\mathbb{D}$. Since Ψ is independent of ζ then $R^{nd}=-R^{d}=0$. Moreover, as $\boldsymbol{\sigma}^{d}=0$, at the actual stress state $\boldsymbol{\tau}^{d}=\mathbf{C}:\left(\boldsymbol{\varepsilon}-\boldsymbol{\varepsilon}^{p}\right)$ and the loading function f *is always equal to*

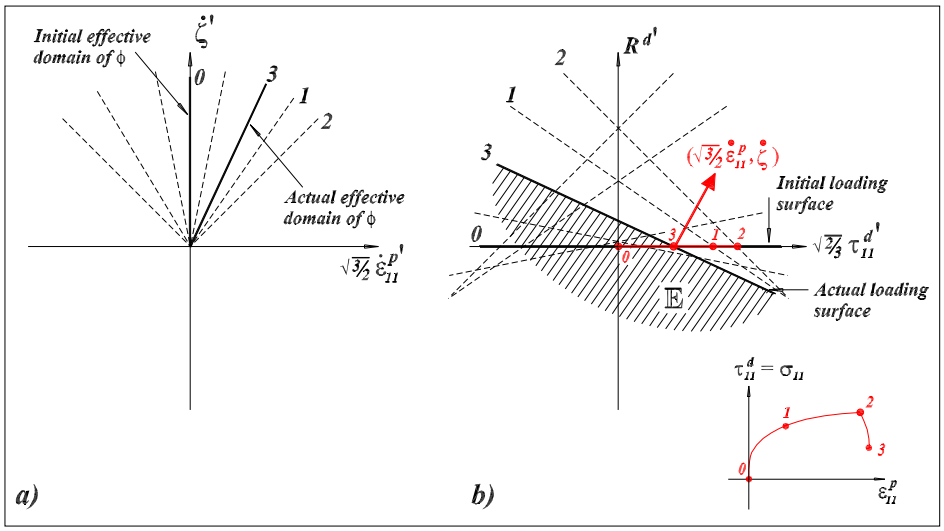

Fig. 1. Endochronic model. a) Several configurations of the domain $\mathbb{D}$. b) Configurations of the convex set $\mathbb{E}$ associated with $\mathbb{D}$. The actual state, $(\boldsymbol{\tau}^d, R^d)$, always lies on the axis $R^{d'} = 0$, and the flux is normal to the boundary of $\mathbb{E}$.

zero. In other words, $(\boldsymbol{\tau}^d, R^d)$ always belongs to the boundary of $\mathbb{E}$, during both loading and unloading phases, and *all the states are plastic states*. The dual normality conditions (5) lead to the endochronic flow rules:

$$\dot{\boldsymbol{\varepsilon}}^p = \frac{dev\left[\mathbf{C}:\left(\boldsymbol{\varepsilon} - \boldsymbol{\varepsilon}^p\right)\right]}{2G\ g(\zeta)/\beta}\dot{\lambda}, \quad \dot{\zeta} = \dot{\lambda}\ ,\ \dot{\lambda} \geq 0 \tag{11}$$

Eqs. (9)-(10) and (11) prove that endochronic models are associated in generalized sense. Moreover, since f is always equal to zero at the actual state, *the consistency condition is automatically fulfilled and cannot be used to compute* $\dot{\lambda}$. This situation, typical of endochronic theory, entails that the plastic multiplier $\dot{\lambda} = \dot{\zeta}$ has to be defined by an additional assumption. The standard choices are $g\left(\zeta\right) = 1$ and $\dot{\vartheta} = \dot{\zeta} = \|dev\left(\dot{\boldsymbol{\varepsilon}}\right)\|$. More complex definitions can be chosen [4]. It must be noticed that both flows $\dot{\boldsymbol{\varepsilon}}^p$ and $\dot{\zeta}$ can be different from zero during unloading phases.

4 New formulation of the Mróz model

Like for endochronic theory, the flow rules of the Mróz model [8] can be deduced from a suited pseudo-potential using the normality assumption. The Helmholtz free energy is defined as follows:

$$\Psi\left(\mathbf{v}\right)=\tfrac{1}{2}\left(\boldsymbol{\varepsilon}-\sum_{i=1}^{N}\boldsymbol{\varepsilon}_i^p\right):\mathbf{C}:\left(\boldsymbol{\varepsilon}-\sum_{i=1}^{N}\boldsymbol{\varepsilon}_i^p\right)$$

$$+\tfrac{1}{2}\sum_{i=1}^{N}\left(\boldsymbol{\varepsilon}_i^p-\boldsymbol{\beta}_i\right):\mathbf{D}_i:\left(\boldsymbol{\varepsilon}_i^p-\boldsymbol{\beta}_i\right)$$

where $\mathbf{v}=(\boldsymbol{\varepsilon},\boldsymbol{\varepsilon}_1^p,...,\boldsymbol{\varepsilon}_N^p,\boldsymbol{\beta}_1,...,\boldsymbol{\beta}_N,\zeta_1,...,\zeta_N)$ are the state variables (total strain and, for each of the N mechanisms introduced, plastic strain, kinematic and isotropic hardening variables); $\mathbf{D}_i=\left(D_{1,i}-\frac{2}{3}D_{2,i}\right)\mathbf{1}\otimes\mathbf{1}+2D_{2,i}\mathbf{I}$ is the fourth-order tensor of the hardening coefficients. The non-dissipative thermodynamic forces are deduced

$$\begin{aligned}
\boldsymbol{\sigma}^{nd}&=\tfrac{\partial\Psi}{\partial\boldsymbol{\varepsilon}}=\mathbf{C}:\left(\boldsymbol{\varepsilon}-\sum_{i=1}^{N}\boldsymbol{\varepsilon}_i^p\right)=\boldsymbol{\sigma}\\
\boldsymbol{\tau}_i^{nd}&=\tfrac{\partial\Psi}{\partial\boldsymbol{\varepsilon}_i^p}=-\boldsymbol{\sigma}+\mathbf{X}_i^d=-\boldsymbol{\tau}_i^d\\
\mathbf{X}_i^{nd}&=\tfrac{\partial\Psi}{\partial\boldsymbol{\beta}_i}=-\mathbf{D}_i:\left(\boldsymbol{\varepsilon}_i^p-\boldsymbol{\beta}_i\right)=-\mathbf{X}_i^d\\
R_i^{nd}&=\tfrac{\partial\Psi}{\partial\zeta_i}=0=-R_i^d
\end{aligned}\tag{12}$$

Eqs. (12) also report the relationships between non-dissipative (nd) and dissipative forces (^{d}). These thermodynamic forces, together with the corresponding state variables, define the analogical scheme depicted in Figure 2a. The pseudo-potential ϕ is chosen as a sum of N pseudo-potentials, one for each of the N mechanisms, i.e. $\phi=\sum_{i=1}^{N}\left[\phi_i+\mathbb{I}_{\bar{\mathbb{D}}_i(\mathbf{v})}\right]$, with

$$\phi_i=\left[\sigma_{y,i}+\left(\varepsilon_i^p-\beta_i\right):\mathbf{D}_i:\left(\mathbf{n}_j\left(\mathbf{v}\right)-\mathbf{m}_j\left(\mathbf{v}\right)\right)\right]\dot{\zeta}_i'$$

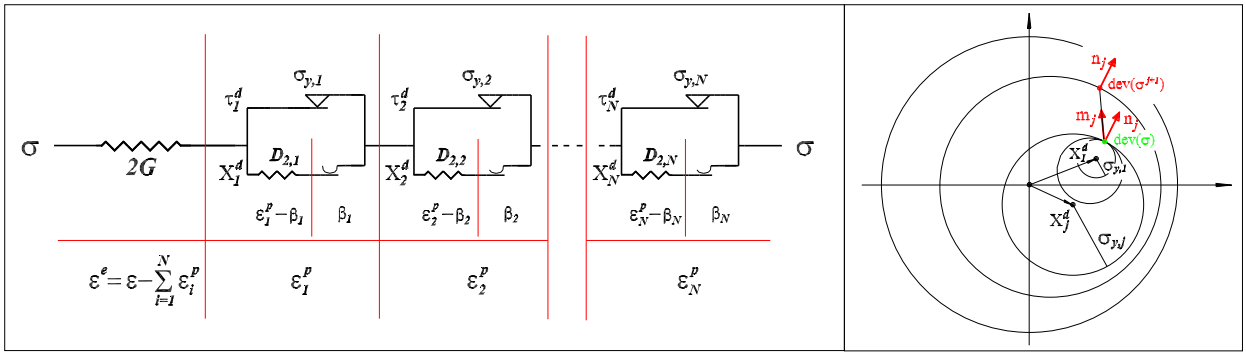

Fig. 2. Mróz model. (a) Analogical scheme. (b) Loading surfaces.

$$\bar{\mathbb{D}}_i(\mathbf{v}) = \left\{ \begin{array}{l} \left(\dot{\varepsilon}_i^{p'}, \dot{\zeta}_i', \dot{\beta}_i'\right) \ / \ tr\left(\dot{\varepsilon}_i^{p'}\right) = 0, \quad \dot{\zeta}_i' \geq \left\|\dot{\varepsilon}_i^{p'}\right\| \\ \\ tr\left(\dot{\beta}_i'\right) = 0 \ , \ \dot{\beta}_i' = \left(\mathbf{n}_j(\mathbf{v}) - \mathbf{m}_j(\mathbf{v})\right)\dot{\zeta}_i' \end{array} \right\}$$

Moreover (see also Figure 2b),

$$\mathbf{n}_j(\mathbf{v}) = \frac{dev\left(\boldsymbol{\tau}_j^d(\mathbf{v})\right)}{\left\|dev\left(\boldsymbol{\tau}_j^d(\mathbf{v})\right)\right\|}$$

$$\mathbf{m}_j(\mathbf{v}) = \frac{dev\left(\boldsymbol{\sigma}^{j+1}(\mathbf{v}) - \boldsymbol{\sigma}(\mathbf{v})\right)}{\left\|dev\left(\boldsymbol{\sigma}^{j+1}(\mathbf{v}) - \boldsymbol{\sigma}(\mathbf{v})\right)\right\|}$$

$$\boldsymbol{\sigma}^{j+1}(\mathbf{v}) = \mathbf{X}_{j+1}^d(\mathbf{v}) + \frac{\boldsymbol{\sigma}_{y,j+1}}{\sigma_{y,j}} dev\left(\boldsymbol{\sigma}(\mathbf{v}) - \mathbf{X}_j^d(\mathbf{v})\right)$$

where $\mathbf{m}_j$ is the vector defining Mróz's translation rule and $\boldsymbol{\sigma}^{j+1}$ corresponds to the target stress point, lying on the $(j+1)-th$ *active* surface, i.e. the largest one among those having the actual stress point on its boundary; $\mathbf{n}_j$ is the normal to the active surface at the actual stress point.

The formulation suggested here properly defines the duality between the back-stresses $\mathbf{X}_i^d$ and the internal variables β_i. Moreover, it shows that the flows $\dot{\beta}_i$ may be different from zero only for non-proportional loading, viz. $\mathbf{n}_j \neq \mathbf{m}_j$. One can also notice that the term ϕ_i of the pseudo-potential, contributing to the dissipation Φ_1 when $\dot{\zeta}_i' = \dot{\zeta}_i \neq 0$, *may be negative* for non-proportional

loading.

The dual pseudo-potentials can be computed by the Legendre-Fenchel transform. Therefore :
$\phi^* = \sum_{i=1}^{N} \phi_i^* = \sum_{i=1}^{N} \mathbb{I}_{\mathbb{E}_i(\mathbf{v})}$ with

$$\mathbb{E}_i(\mathbf{v}) = \left\{ \left(\mathbf{X}_i^{d'}, R_i^{d'} \right) \ / \ f_i \left(\mathbf{X}_i^{d'}, R_i^{d'}; \mathbf{v} \right) \leq 0 \right\}$$

where the loading function f_i is given by:

$$f_i \left(\mathbf{X}_i^{d'}, R_i^{d'}; \mathbf{v} \right) = \left\| dev \left(\boldsymbol{\tau}_i^{d'} \right) \right\| + R_i^{d'} - \sigma_{y,i}$$

$$+ dev \left(\mathbf{X}_i^{d'} \right) : (\mathbf{n}_j - \mathbf{m}_j) - (\boldsymbol{\varepsilon}_i^p - \boldsymbol{\beta}_i) : \mathbf{D}_i : (\mathbf{n}_j - \mathbf{m}_j)$$

At the actual state, one has $f_i = \left\| dev \left(\boldsymbol{\tau}_i^d \right) \right\| - \sigma_{y,i}$, which is the usual definition for the loading function. The normality conditions (5) lead to the well-known Mróz flow rules:

$$\dot{\varepsilon}_i^p = \dot{\lambda}_i \mathbf{n}_j, \qquad \dot{\zeta}_i = \dot{\lambda}_i, \qquad \dot{\beta}_i = \dot{\lambda}_i (\mathbf{n}_j - \mathbf{m}_j) \tag{13}$$

with the Kuhn-Tucker conditions $\dot{\lambda}_i f_i = 0$, $\dot{\lambda}_i \geq 0$, $f_i \leq 0$; recall that $f_i = 0$ for all $i \leq j$. The consistency conditions, viz. $\dot{f}_i \left(\mathbf{X}_i^{d'}, R_i^{d'}; \mathbf{v} \right) = 0$ for $i \leq j$, lead to the computation of $\dot{\lambda}_i$ and then of the plastic flow $\dot{\varepsilon}^p := \left(\sum_{i=1}^{j} \dot{\lambda}_i \right) \mathbf{n}_j$.

5 Conclusions

Pseudo-potentials depending on states variables and the normality assumption have been used to formulate the endochronic theory of plasticity and the Mróz model. This description helps to investigate the thermodynamic properties of

both models and makes possible an insightful comparison with other classical and non-classical plasticity theories.

References

[1] H. Ziegler, Z. Angew. Math. Phys, 9b (1958) 748-763.

[2] H. Ziegler, C. Wehrli, Avd. Appl. Mech. 25 (1987) 183-238.

[3] M. Frémond, Non-Smooth Thermomechanics, Springer-Verlag, Berlin, 2002.

[4] S. Erlicher, N. Point, Int. J. Solids Struct. 43 (2005) 4175-4200.

[5] J. Lemaitre, J.-L. Chaboche, Mechanics of solid materials. Cambridge Univ. Press, Cambridge, 1990.

[6] J. Lubliner, R.L. Taylor, F. Auricchio, Int. J. Solids Struct. 30 (1993) 3171-3184.

[7] K.C. Valanis, Arch. Mech. 23-4 (1971) 517-551.

[8] Z. Mróz, J. Mech. Phys. Solids 15 (1967) 163-175.

[9] M. Jirásek, Z.P. Bažant, Inelastic analysis of structures, Wiley, Chichester, 2002.

[10] R.T. Rockafellar, Convex Analysis, Princeton Univ. Press, Princeton, 1969.