HAL
open science

Evolution of information during problem solving in inventive design

Sébastien Dubois, Roland de Guio, Gérard Vieux

To cite this version:

Sébastien Dubois, Roland de Guio, Gérard Vieux. Evolution of information during problem solving in inventive design. International Conference on Engineering Design (ICED'07), Aug 2007, Paris, France. pp.NA. hal-00341006

HAL Id: hal-00341006

https://hal.science/hal-00341006v1

Submitted on 24 Nov 2008

HAL is a multi-disciplinary open access archive for the deposit and dissemination of scientific research documents, whether they are published or not. The documents may come from teaching and research institutions in France or abroad, or from public or private research centers.

L'archive ouverte pluridisciplinaire **HAL**, est destinée au dépôt et à la diffusion de documents scientifiques de niveau recherche, publiés ou non, émanant des établissements d'enseignement et de recherche français ou étrangers, des laboratoires publics ou privés.

INTERNATIONAL CONFERENCE ON ENGINEERING DESIGN, ICED'07
28 - 31 AUGUST 2007, CITE DES SCIENCES ET DE L'INDUSTRIE, PARIS, FRANCE

EVOLUTION OF INFORMATION DURING PROBLEM SOLVING IN INVENTIVE DESIGN

Sébastien Dubois[1], Roland De Guio[1], Gérard Vieux[2]
[1]INSA de Strasbourg – 24 Boulevard de la Victoire – 67084 Strasbourg Cedex
[2]TRIXELL, Z.I. Centr'Alp, 38430 Moirans

ABSTRACT
Inventive design implies solving problems for which no known typical solution does exist. Designing a new system means building a representation of a concept that could be recognised and validated as a solution. Which knowledge is useful to represent a specific problem? What is the nature of this useful knowledge? Which amount of knowledge is required to solve a problem? What is an adequate way to represent the problem in order to solve it quickly? Several methods exist with different approaches for problem stating. To be able to compare these methods, it is important to understand which kind of concepts are used during problem solving. In this article a descriptive approach of design is proposed. One method, ARIZ, extracted from TRIZ – a theory for solving problems of invention – is analysed and described through its knowledge management dimension. Thus, the way inventive problems are reformulated to be solved is analysed. To reach this point, one solved case study lead by the application of ARIZ methods will be considered. An ontology representing the used frames to reformulate the problems, which allows to categorize and to make measures on the knowledge during the solving process, will be proposed. Then the treatment of the information during the resolution will be analysed and commented.

Keywords: Inventive design, ontology building, method evaluation, TRIZ

1 INTRODUCTION
Designing, and especially in inventive design, consists mainly in understanding and solving problems. Simon [1] describes the designer activities as a problem forming, finding and solving activity. Designing a new system means building a representation of a concept that could be recognised and validated as a solution. The problem reformulation is more or less guided with regard to the different design methods. Many questions arise due to this process of problem reformulation. Which knowledge is useful to represent a specific problem? What is the nature of this useful knowledge? Which amount of knowledge is required to solve a problem? What is an adequate way to represent the problem in order to solve it quickly? Are the answers to these questions different when solving a problem the solution of which exists in the initial space of research or solving a problem requiring to change this initial space? Methods like parametric design [2, 3] are mainly based on the assumption that the parameters describing the problem are known a priori. It means that it is possible to build a priori the space of research of the solution. In this case the question is: how to find quickly the solution into a definite space? But when considering inventive design situation, the problems are from a different nature, as they are recognised as being ill-defined and open-ended [4]. The design problems are considered ill-defined since initially, designers only have an incomplete and imprecise mental representation of the design objectives. Designers' mental representations develop as the problem-solving process progresses [5]. This specificity in terms of design problems has been described as being based on an iterative dialectic between positioning the problem and finding a solution to the problem. Gero [6] defines conceptual design, the creative phase in the design process, as being characteristic of the fact that "*all knowledge required to achieve the design is not known in theory, i.e. part of the design process consists in determining what is required*." To summarise this approach, during the positioning of the problem, the designers refine the design objectives and its specifications and therefore refine their mental representation of the problem. During the problem-solving phase, designers work out solutions and assess these solutions in relation to a variety of criteria and

constraints. Furthermore, the design problems are also defined in an infinite space, i.e. that no single correct solution can exist for a given problem, but rather a range of potential solutions is proposed.
Several methods do exist to solve problems in inventive design, going from very low directive ones, as for example the "Brainstorming" [7] to very directive and detailed ones, as for example the methods based on TRIZ [8], a theory for problem resolution in design. When aiming at comparing these methods in order to analyse their efficiency to build a description of solution, tools are missing. What kind of tool is required? The tool has to enable the representation of the way information is evolving during the problem resolution process, it has to enable the elicitation of the kind of knowledge that is represented and, last but not least, it has to enable a measure of quantity of knowledge required to solve the problem. This tool has also to be generic in order to enable the comparison of different methods.
In this paper a first step toward previous described objectives is proposed: the construction of a way to analyse and measure the evolution of problem reformulation of a case study solved by the use of ARIZ-85C, which is a meta-method of the TRIZ. To enable the analysis and measurement of information, the information manipulated during the process has to be represented, so a model has to be built. The model has to enable the representation of how the information is treated during the problem solving process, thus it is specific to the used method. Of course, a further step will be to generalise this model to fit different methods. A model and criteria for evaluating the evolution of information are defined and proposed in this paper.
In this paper, the analysis of a case study is proposed in order to illustrate how the analysis of the solving process is performed and a first evaluation of the evolution of information during problem solving process is discussed.

2 TRIZ MODELS FOR PROBLEM REPRESENTATION

TRIZ is a theory dedicated to technical problem solving, and it is particularly appropriate for inventive resolution [8]. It means that one of the main benefits of TRIZ methods is to enable the construction of a new point of view, a new way to represent problematic situations; whereas some other problem solving techniques are dedicated to an exhaustive exploration of a known research area. Our interest to better understand the considered information and how it is treated required to model the TRIZ frames for representing the problems. Based on this model, the analysis of both nature and treatment of this information is proposed.

2.1 A dual vision between positivist and constructivist approach

The TRIZ frames for representing a problematic situation can be classified thanks to two kinds of models. The first one is a representation of the resources, through a positivist approach [9]; whereas the second one is a problem-oriented representation of these resources, which is more a constructivist approach.

2.1.1 The representation of the resources in TRIZ methods

In Triz resources are mainly described through their features. The resources are qualified within 4 main categories: space, time, substance or field [10]. If the substance is considered as a field, it means that the resource is considered as a mean to create interaction between two substantial substances. Mainly inspirited by the Artificial Intelligence way of describing elements, the representation of an element aims at clarifying this element through a non ambiguous description. To reach this goal, it is proposed to depict the element by valuing its main features like in [11]. This kind of description is a way to describe the world by a positivist approach. Moreover TRIZ integrates the taking into account of system's evolution directions [12] as objective criteria, as it proposes a set of laws for technical systems evolution.
A last positivist description is the influences between parameters that represent the objective laws of physics.

2.1.2 The problem formulation frames

The first point to be focused in TRIZ is the functional point of view. The description of a function is also based on the feature description. A function, from TRIZ point of view, is the modification of the value of an element, called the product of the function [11]. So each modification of the value of a feature of an element could be seen as a specific function, and thus a specific system to realise this

function could be defined. It means that the system is always defined specifically to a particular function.
The main frame to formulate the problems is the contradiction which opposes two functions that require one resource to be in two different states.

2.1.3 The general models of TRIZ

TRIZ is a theory to develop methods of problem resolution in design of technical systems. TRIZ is centred on formulating and solving problems. In TRIZ several models for formulation of problems are proposed. Each of these models corresponds to a different level of abstraction. Some of the models are used to enable resolution by the use of shaped databases of generic solutions; some of the models are only intermediary steps in the problem formulation process. At the lowest level of abstraction, the more specific level, there is is the so called "technical contradiction". This level of problem formulation is an intermediary step in the resolution process, as this frame of problem formulation is dedicated to a better understanding of the problem without aiming at an inventive resolution of the problem. The technical contradiction is the expression of the opposition between two states of a system that seems impossible to satisfy at the same time. The two states are defined as being two parameters of the same system. Khomenko in [13] proposed a more precise definition of this level of definition of the problem, describing these parameters as evaluation parameters. Evaluation parameters are used to check if the problem is solved or not, but not used as parameters on which we can proceed to solve the problem. The simplest way proposed in TRIZ methods for formulating the problem through this shape is to explain why a known solution, a typical solution, cannot be applied in the considered case.
A technical contradiction exists when a solution is known to reach the satisfaction of the evaluation parameter 1, but the application of this solution disables the satisfaction of the evaluation parameter 2.
For example a technical contradiction exists in belt-pinion systems when the rigidification of the belt enables a better transmission, but then disables the ability of the belt to turn around the pinion.
A last model is proposed in TRIZ for problem representation, it is called the "physical contradiction". This model is the more abstract one. This model focuses the problem on one single element of the system, which is the core of problem. According to TRIZ a problem can always be formulated as a physical contradiction. Such a contradiction is defined as the requirement for one element to be in two contradictory states. The two benefits of such a formulation are:

- The focus on one single element, which is the core of problem;
- The formulation is totally not specific to a domain.

A physical contradiction exists when one element of a system has to be in two contradictory states.
For example a physical contradiction exists in belt-pinion systems as the belt as to be both rigid to transmit energy efficiently and flexible to turn around the pinions.
Another interest of this level of formulation is that few principles exist to satisfy both contradictory states; in TRIZ a list of 11 principles is proposed [14]. One of these principles is designing a system having globally one property but made of elements having the contradictory property. This principle is applied by the chain to solve the problem of the belt. The chain is globally flexible and made of rigid elements.

2.1.4 The used TRIZ ontology [15]

The built model is the object-oriented representation of the TRIZ problem formulation frames. It does not include all the concepts of the theory; especially TRIZ proposes laws of evolution for technical systems, which are not available. The objectives are both to propose a clear description of TRIZ problem formulation frames that are proposed at different levels of abstraction, and make the link between these frames and a functional description of systems.
The model is represented on Figure 1 and is described below. The next description of the model is the description of the TRIZ frames to represent the real elements and the problems. In this model some peculiarities appear in regard of TRIZ frames. First of all, the technical contradiction model is not present; it has been replaced by a functional description of the systems. This proposal is based on the fact that the evaluation parameters of systems are a representation some functionalities of a specific system. Considering the example of the bicycle chain, ability to transfer energy was defined as an evaluation parameter, but it can also be described as a function. Thus the functions in the presented

models are on the same level, and provide the same role of intermediary problem statement, as technical contradiction in classical TRIZ.
A resource is the basic element representing a real object characterized by its localization and described by a whole of parameters. A resource could be localized inside the system implied in the study, in an adjacent system or, more globally, in the environment. A resource could be a field, a geographical zone (a space), a temporal period (a time) or a material resource. The nature of the field could be magnetic, mechanic, electric, chemical or thermal. A material resource could be a system or a substance in regard of its decomposability. A system is composed of, at least, four material resources, enabling its functionality. These four main elements assume the roles of motor, transmission, tool and control to provide the function.
A function is the modification of the value of a parameter of a resource. The realization of the function modifies the parameter from an initial value into a final value. The function operates during an operational time and within an operational zone. The importance of the function could be principal, if it is the function for which the system has been designed, or technical, if it is a sub-function enabling the realization of the principal one. The type of the function could be useful or harmful. It is harmful if it is a non desired function to be eliminated, resulting of the realization of other useful functions. A function could participate to the realization of a super-function and could be decomposed into sub-functions.
A contradiction arises if one or several functions require that the parameter of a resource has one value, when another, or several others, functions require this parameter to have another value.

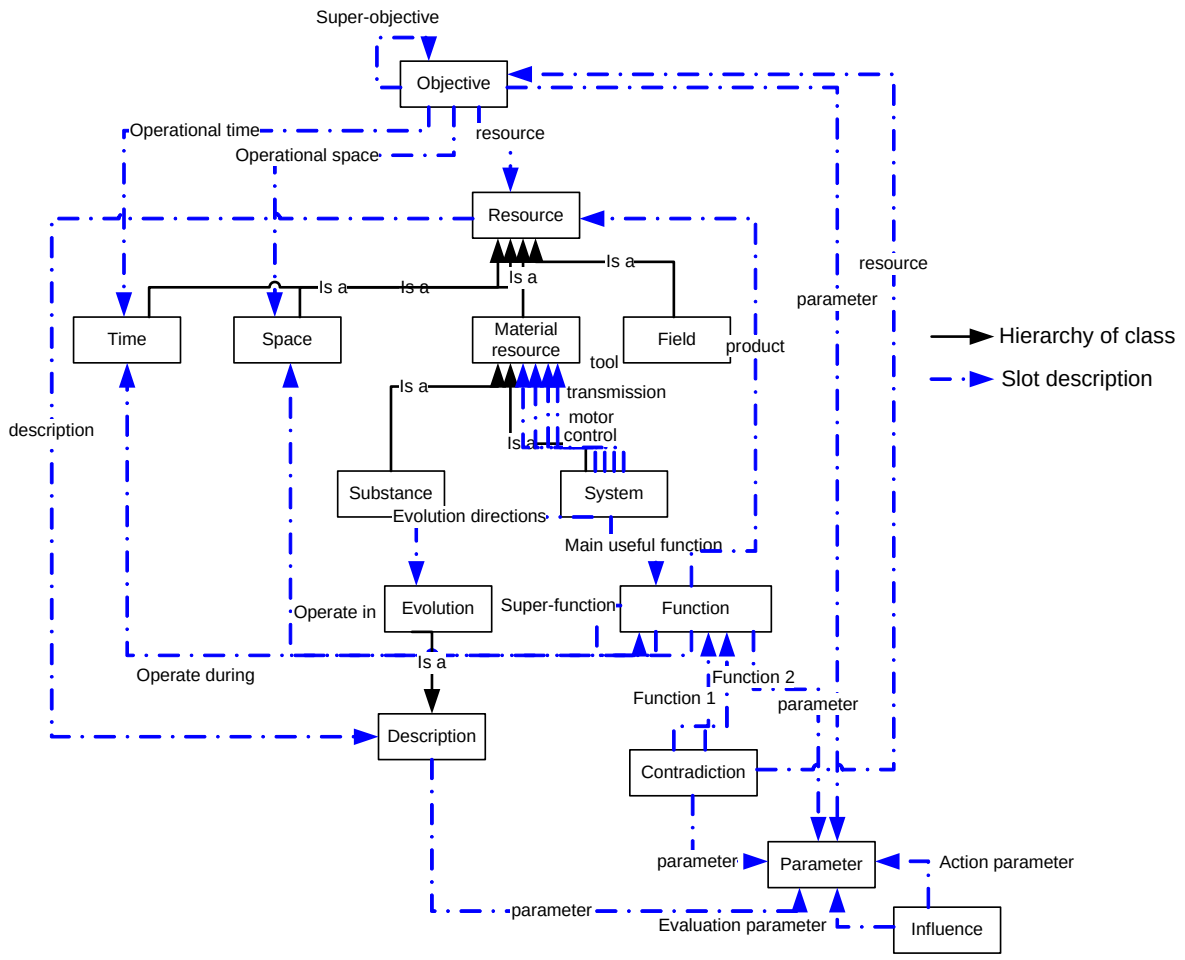

Figure 1. The TRIZ ontology

2.2 The evolution of information during problem solving process

Problem solving is the building of a specific representation of the world; it also implies parallel thinking process at different level of abstractions. If trying to model these parallel thinking processes we can detail the process as an 8 steps process.

- P1 the recognition of an unsatisfactory situation, this is the intention required to initiate a design process
- P2 the clarification of the objectives of the design process, where the unsatisfactory feeling is translated into evaluation criteria
- P3 the clarification of the difficulties why the objectives can not be reach by known ways
- P4 the formulation of the root of problem by the identification of the means for resolution
- P5 the building of a generic concept of solution
- P6 the specification of the generic principle of resolution by the identification of the specific way to implement it
- P7 the evaluation of the gap between the proposed solution and the objectives
- P8 the modification of the initial situation

As problem solving is considering and modifying a particular system, this system has to be modelled. In its first understanding, the system is the problematic referent; it means it is the real world, with no associated formal model. It is a cognitive system: "a network of subconscious notions, prejudices, preconceptions, attitudes" [16]. The generation of a solution requires having a better understanding of the system with well defined and measurable attributes and a rigorous characterization of the interrelations between the components.

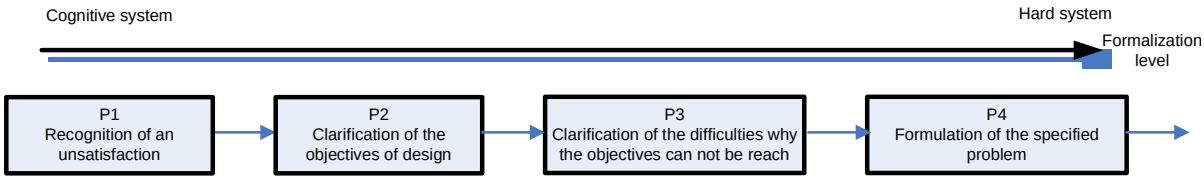

Figure 2. Evolution of the system "problem solving" during problem formulation phases

The problem formulation focuses on the transition from a cognitive system to a hard system, it means on the problem formulation phases of the problem solving process, as depicted on Figure 2. On the contrary solution specification phases are a kind of reverse process, going from a hard system to a cognitive one.

3 HOW TO ANALYSE THE INFORMATION DURING PROBLEM SOLVING PROCESS

3.1 The different strategies and awaited outputs

The general objective of the study is to evaluate and compare the methods for problem resolution in design of technical system. To reach this goal it is necessary to observe and analyse the methods both independently and in comparison, it is also fruitful to provide a two steps analysis: firstly static way, secondly dynamic way. The table 1 resumes the different outputs than can be obtained by the different nature of observations:

- Static observation of one method consists in the analysis of the structure of the method, it means the different steps, the nature of the manipulated information and how links are identified between this information. The output of such an analysis provide the building of the ontology of the analysed method, as it has been presented for TRIZ methods in §2.1.4.
- Static observation of several methods, it means comparison of the different ontology enable the evalutation of the richness of these different methods (are the different concept as detailled in one method as in the other one?), and of the completeness of the methods (are all the concepts of the first method included in the second one?).
- Dynamic observation of one method consists of the observation of the way the method is applied. This observation enables to understand when and how the useful information (information that directly leads to the solution) is identified and how this useful informaiton is treated. It also enables to better understand the gap between the formalisation of the method and the way it is applied, and thus leads to the clarification of the experts' cognitive processes. These processes are mental operation that are not formalised in the method but are necessary to fulfill the resolution of the problems.

- Last, the dynamic observation of different methods, it means the observation of real problem solving processes applying the different methods, enables to identify the number or required steps, the time to solve the problem, and thus to propose a measure of the efficiency of the methods.

	Static observation of the method	Dynamic observation of the method
One method Several cases	Which kind of concepts is used?	How is the useful information identified? What are the cognitive processes?
Several methods	Is the method rich and complete?	How many steps to reach the resolution? What is the efficiency of the method?

Table 1. The different required analyses

The different analysis presented in the table 1 will enable a good comparison of the methods and also provide a better way to integrate these different methods. In This article we present a first step in this analysis, wich is the analysis of one method, ARIZ. The analysis of ARIZ is proposed static and dynamic way. The fact is that it has been initiated only with two study cases (one of which is presented in this article), thus it has to be repeated to ensure its robustness. Also the criteria to measure the efficiency of the method and to identify the expert cognitive processes have to be validate, it seems that the proposed ones are satisfying to make comparison, but they will be validated when an another method will be analysed.

3.2 Static observation of one methode, ARIZ

To illustrate the way the problem solving process is built going from a cognitive system to a formalized one, we will present one case study solved by the use of TRIZ methodologies, mainly ARIZ-85C, an acronym for Algorithm for Inventive Problem Solving.
For each of the steps of the methodology, will be clarified:

- The number of elicited concepts
- The number of elicited parameters
- The ratio of elicited parameters/concepts
- The number of elicited links between the concepts
- The ratio of elicited links/concepts
- The number of modified concepts

One of the objectives is to show how the model evolves from cognitive to hard one. The first hypothesis on which we build our study is to say that the problem formulation process aim at focusing on the core of the problem, so the number of considered elements has to decrease. The second hypothesis is stated : the problem formulation will evolve from cognitive to more formalized system, it means that the considered elements will have to more precisely elicited (so more parameters per concepts have to be elicited) and that the system will be more structured (it means that more links between the concepts will have to be characterised).
Another objective is to understand and characterise which kind of knowledge is useful to solve one particular problem. The aim is to be able to identify as fast as possible the useful information, not to require long formulation process.

4 APPLICATION

TRIXELL develops and produces a complete family of X-ray flat panel digital detectors for the entire radiological imaging industry. TRIXELL has developed a real competitive strategy based on cost reduction. To reach this objective they are producing flat scanners made of assembled TFT plates. Using smaller TFT plates enable dramatic cost reductions, but imply developing algorithms to calibrate the scanners. To pursue their cost reduction strategy, TRIXELL was looking for a new principle of flat scanner production keeping their today's quality and reliability but requiring less calibration. One of the main difficulties for TRIXELL is to be able to imagine new solutions after ten years of development.
To solve their problems TRIXELL asked for TRIZ experts to help them in the description of their problematic situation and in the proposal of new concepts. As inventive concepts have been defined for which patents are in validation process, the results of this study won't be presented in this paper.

4.1 General description of the problematic situation

The studied system is a flat numeric scanner (cf. Figure 3) used to scan human bodies to detect irregularities of 140µm. It is made of several layers and at least 2 butted TFT (thin-film transistor) plates.

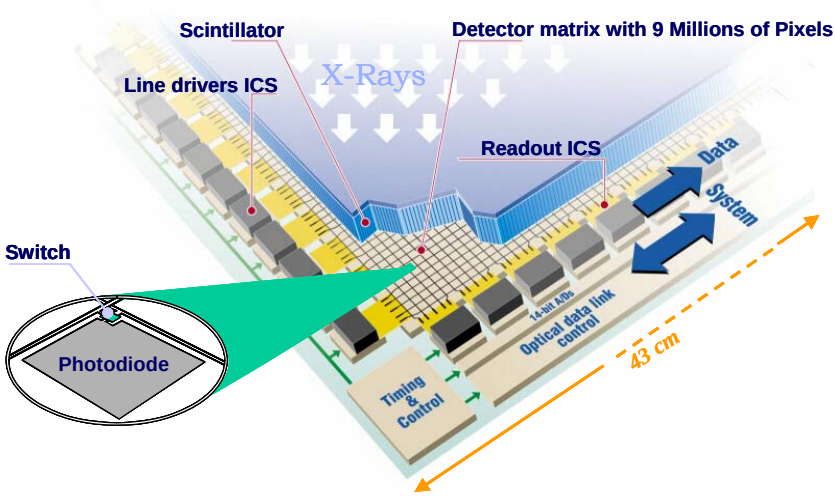

Figure 3. Main components of a flat numeric scanner

The main working principle is the transformation of the X-ray flow into an electric signal, and it is provided by a scintillator made of CsI which transforms the x-ray flow into a visible light flow and of the TFT plates which transform the visible light signal into an electric signal, as illustrated on Figure 4.

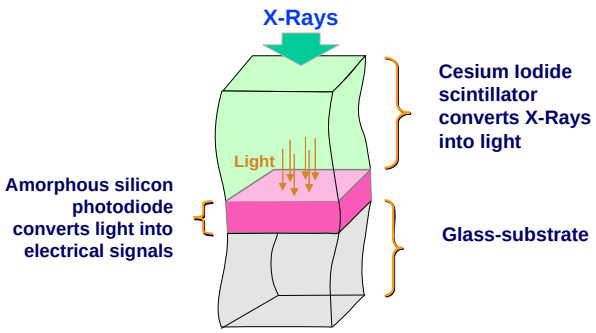

Figure 4. Main working principle of the flat numeric scanner

The use of several TFT plates enables the reduction of costs, as small TFT plates are less expensive to produce but in the same time it generates non homogeneous artefacts on the image, from one scanner to another. Thus specific algorithms have to be defined to calibrate each scanner.
The case study aim at designing a new flat numeric scanner made of several TFT plates, but taking off the need of calibration algorithms.

4.2 Analysis of the resolution process

The resolution process has been composed of 6 steps:

- The analysis of initial situation: this part is a clarification of the root cause of the problem on which efforts have to be focused.
- The application of ARIZ [17], a TRIZ method to formulate problems by contradiction and to resolve the contradiction through the identification of the main required features and of the available resources. This method is described as an algorithm, which focuses on one particular problem, reformulates the core of this problem, analyses the available resources to solve the problem and try to solve it. If a concept of solution is built, it will be refined as a

technologically feasible solution; otherwise a new problem will be defined, more precise than the previous one. The new iteration is based on proposed concept solution and integrates the constraints why this concept solution cannot be implemented. The first iteration with ARIZ has been lead focusing on the problem of requiring one optical index to well guide the light but requiring several optical indexes to keep the current process.

- A second iteration of ARIZ has been lead, focusing on the problem of requiring the butting material to be glass to well guide the light and to be glue to well assemble the plates.
- A third iteration of ARIZ has been lead, focusing on the required or not required presence of the butting zone.
- A fourth iteration of ARIZ has been lead, focusing on the homogeneity of the properties of the environment inside the detector.
- A last iteration of ARIZ has been lead, focusing on the viscosity of the environment inside the detector.

4.3 Analysis of the collected information

The information has been collected by analysis of the way each step of the method has been instantiated. Each piece of information has been recognised as a concept and classified with regard to the built ontology. For each concept, a number has been attributed; the name, the class of concept and the defined parameters have been collected, as presented in Table 2. It is at excerpt from the whole table the size of which is 166 lines.

N°	Name	Class	Parameter 1	Parameter 2	Parameter 3	Parameter 4	Parameter 5
1	system to scan human bodies	system	function: 2	super-system: 2	Main Useful Function: 33	36: 3000*3000 pixels	42: 43*43 cm
2	to detect 140µm irregularities	function					
3	several layers	system	super-system: 1				
4	2 butted glass plates	system	super-system: 1				
5	TFT plate	system	super-system: 1	43: 2 or 4			

Table 2.Excerpt from collected information

Then, for each step of the process, the criteria defined in §3 have been calculated. The results, in terms of collected information, of each of these steps are presented in the Table 3.

	AIS	ARIZ 1	ARIZ 2	ARIZ 3			ARIZ 4	ARIZ 5		
		step 1	step 1	step 1	step 2	step 3	step 1	step 1	step 2	step 3
The number of elicited concepts	48	9	3	2	4	0	10	2	4	3
The number of elicited parameters	39	13	6	10	2	0	27	6	0	29
The ratio of elicited parameters/concepts	0,81	1,44	2,00	5,00	0,50		2,70	3,00		9,67
The number of elicited links between the concepts	5	9	4	4	0	0	11	4		17
The ratio of elicited links/concepts	0,10	1,00	1,33	2,00	0,00		1,10	2,00		5,67
Number of modified concepts		2		2		2	1	2		2

Table 3. Results of the resolution process

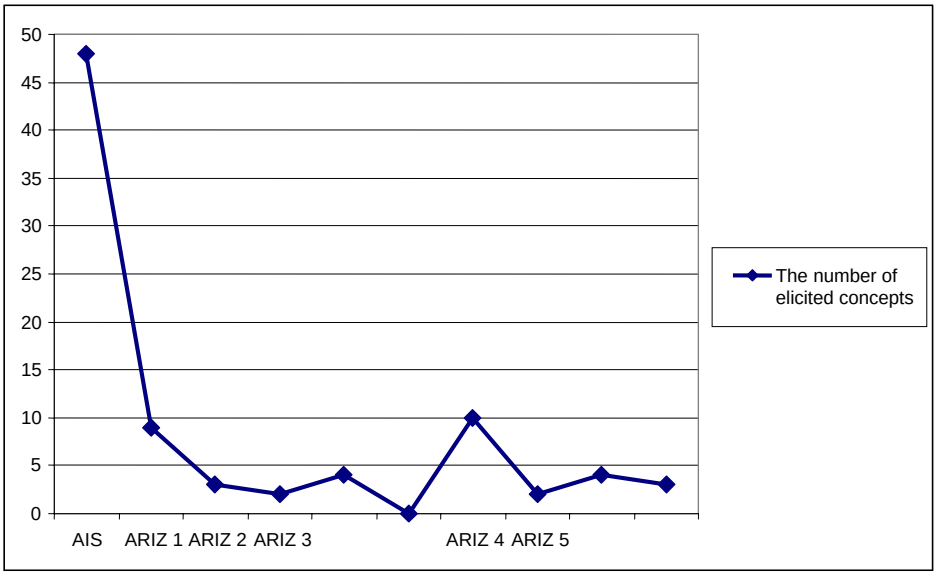

Figure 5. Evolution of the number of elicited concepts throughout the resolution process

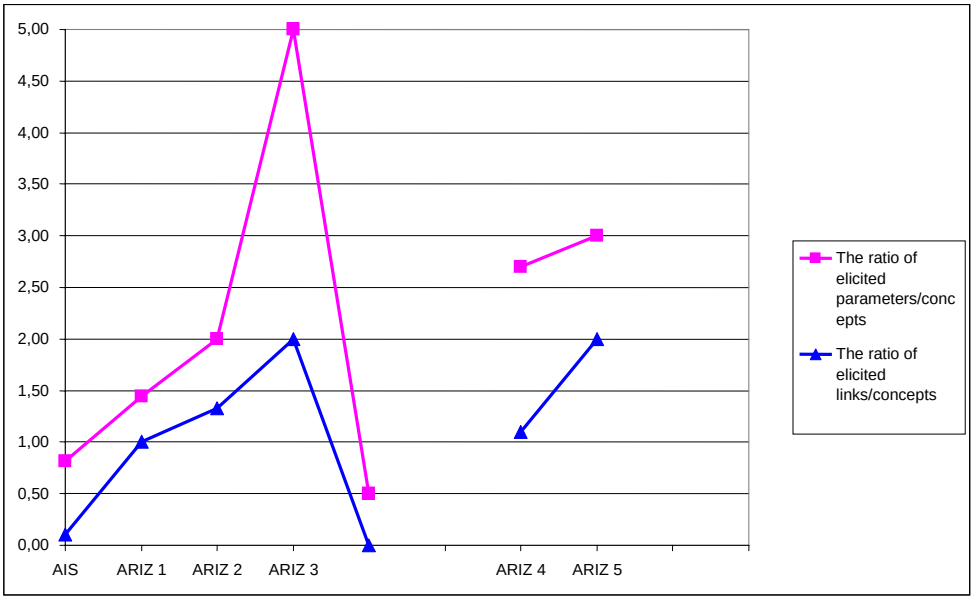

Figure 6. Evolution of the richness of information for elicited information

4.4 Conclusions on the case study

The evolution of the model throughout the different steps has shown a decreasing of the considered concepts but an increasing of the ratio parameters/concepts and links/concepts. This evolution tends to prove that the problem formulation is a process that can be described as building a system and making it evolve from cognitive to hard system.

Another important remark is the fact that the information used to solve the problem has been identified globally at the end of the reformulation process (see Table 4). The several iterations enabled a clarification of the constraints under which the problem has to be solved and thus the precise definition of the core of problem, of the reasons why typical known solutions cannot be applied.

Concept	56	60	73	74	76	77	78	79	80	81	82	83	84
Step of identification	ARIZ 1 step 1	ARIZ 2 step 1	ARIZ 4 step 1	ARIZ 4 step 1	ARIZ 5 step 1	ARIZ 5 step 1	ARIZ 4 step 1	ARIZ 5 step 2	ARIZ 5 step 2	ARIZ 5 step 2	ARIZ 5 step 3	ARIZ 5 step 3	ARIZ 5 step 3
Step of modification							ARIZ 5 step 2						

Table 4. Step of identification and modification of information used to solve the problem

5 CONCLUSION

This study was aimed at characterising the way information is treated during the resolution of a problem in inventive design. We considered TRIZ methods as they imply a quite well formalised approach by the use of algorithms to guide the resolution process. Thus it has been possible:

- to evaluate the progress of the amount of considered information
- to evaluate the level of formalisation for each concept by the number of defined parameters
- to consider when the information used at the end of the process appeared
- how the information is transformed throughout the process

This analysis showed several interesting points:

1. New information is observed all along the process as new iterations are done. It shows clearly the role of reformulation: if much information is present since the beginning, the constraints that limit the resolution are not all identified, and to identify them study of the non applicability of typical solution has to be proceed.
2. The process of problem formulation is clearly a process aiming at focusing on a few elements but very well defined elements, as the number of considered concepts is decreasing but the richness of these concepts is increasing.
3. It seems difficult to identify till the beginning all the useful constrains, and to do that test of applicability of typical solutions has to be lead. But if these constrains are collected along the

time, it seems possible to gain time for the next problems resolution.

Our concern will now be how to make the link between the way information is proceed through TRIZ methods and other problem resolution methods. To reach this goal, we will analyse, generic way, the used TRIZ ontology to determine main concepts for inventive design, the concepts that are inherent to design and not specific to a particular method. Then we will be able to compare how these concepts are used from one method to another one. One of the main benefits of such analysis could be to increase efficiency of the methods if able to characterise what is useful information and how to represent it. This article proposes a way to build a tool to measure methods' efficiency to represent concept solution.

REFERENCES

[1] Simon, H.A. Problem Forming, Problem Finding, and Problem Solving. *1st International Congress on Planning and Design Theory*Boston, USA, 1987).

[2] Monedero, J. Parametric design: a review and some experiences. *Automation in Construction*, 2000, 9(4), 369-377.

[3] Saridakis, K.M. and Dentsoras, A.J. Integration of fuzzy logic, genetic algorithms and neural networks in collaborative parametric design. *Advanced Engineering Informatics*, 2006, 20(4), 379-399.

[4] Bonnardel, N. Towards understanding and supporting creativity in design: analogies in a constrained cognitive environment. *Knowledge-Based Systems*, 2000, 13, 505-513.

[5] Simon, H.A. The structure of ill-structured problems. *Artificial Intelligence*, 1973, 4, 181-201.

[6] Gero, J.S. Conceptual designing as a sequence of situated acts. In (ed.), I.S., ed. *Artificial Intelligence in Structural Engineering*, pp. 165-177 (Springer, Berlin, 1998).

[7] Osborn, A. *Applied Imagination*. (Scribner, New York, 1953).

[8] Altshuller, G.S. *Creativity as an Exact Science*. (Gordon and Breach, New York, 1988).

[9] Dubois, S. and Gartiser, N. L'impact du concept de problème sur son processus de résolution. Application à la conception de systèmes techniques. *6e Congrès international de génie industriel*Besançon,France, 2005).

[10] Dubois, S., Lutz, P., Rousselot, F. and Caillaud, E. A Formal Model for the Representation of Problems Based on TRIZ. *International Conference on Engineering Design, ICED 05*Melbourne, Australia, 2005).

[11] Khomenko, N., De Guio, R., Lelait, L. and Kaikov, I. OTSM-TRIZ Based Computer Support Framework for Complex Problem Management. *International Journal of Computer Applications in Technology*, 2007, to be published(spécial issue Trends in computer aided innovation).

[12] Salamatov, Y.P. *TRIZ: The Right Solution at the Right Time*. (Insytec B. V., Hattem, The Netherlands, 1999).

[13] Khomenko, N. Materials for Seminars: OTSM-TRIZ: Main Technologies of Problem Solving. ("Jonathan Livingston" Project, 2001).

[14] Kaplan, L. *An introduction to TRIZ*. (Ideation International Inc., 1996).

[15] Dubois, S., Lutz, P., Rousselot, F. and Vieux, G. A model for problems' representation at various generic levels to assist inventive design. *International Journal of Computer*

Applications in Technology, 2007, To be published(Special Issue: Computer Aided Innovation (à paraitre)).

[16] Kaposi, A. and Myers, M. *Systems for All*. (Imperial College Press, Singapore, 2001).

[17] Altshuller, G.S. *The Innovation Algorithm: TRIZ, systematic innovation and technical creativity*. Worcester, MA, 1999).

Contact: S. Dubois
LGECO
INSA de Strasbourg
24 boulevard de la Victoire
67084 Strasbourg Cedex
France
(33).388.144.700
(33).388.144.799
sebastien.dubois@insa-strasbourg.fr