HAL
open science

Mosaic versus dual source approaches for modelling the surface energy balance of a semi-arid land

Gérard Boulet, Ghani Chehbouni, Isabelle Braud, M. Vauclin

To cite this version:

Gérard Boulet, Ghani Chehbouni, Isabelle Braud, M. Vauclin. Mosaic versus dual source approaches for modelling the surface energy balance of a semi-arid land. Hydrology and Earth System Sciences Discussions, 1999, 3 (2), pp.247-258. hal-00330825

HAL Id: hal-00330825

https://hal.science/hal-00330825v1

Submitted on 18 Jun 2008

HAL is a multi-disciplinary open access archive for the deposit and dissemination of scientific research documents, whether they are published or not. The documents may come from teaching and research institutions in France or abroad, or from public or private research centers.

L'archive ouverte pluridisciplinaire **HAL**, est destinée au dépôt et à la diffusion de documents scientifiques de niveau recherche, publiés ou non, émanant des établissements d'enseignement et de recherche français ou étrangers, des laboratoires publics ou privés.

Hydrology and Earth System Sciences, 3(2), *247–258* (1999) © EGS

Hydrology & Earth System Sciences

Mosaic versus dual source approaches for modelling the surface energy balance of a semi-arid land

G. Boulet,[1,2] A. Chehbouni,[1] I. Braud[2] and M. Vauclin[2]

[1] IRD/IMADES, Reyes y Aguascalientes, 83190 Hermosillo, Sonora, Mexico
[2] LTHE CNRS UMR 5564 UJF INPG IRD, BP 53, 38041 Grenoble cedex 9, France
e-mail of corresponding author: gilles.boulet@hmg.inpg.fr

Abstract

Two-layer parameterisation of the surface energy budget proves to be realistic for sparse but homogeneously distributed vegetation. For semi-arid land surfaces however, sparse vegetation is usually interspersed by large patches of unshaded bare soil which may interact directly with the atmosphere with little interference with the vegetation. Therefore such surfaces might not be realistically represented by a two-layer parameterisation. The objective of this study is to investigate the issue of representing water and energy transfer processes in arid and semi-arid regions. Two different surface schemes, namely the classic two layer (one-compartment) approach and a two adjacent compartment ('mosaic') approach are used. The performance of both schemes is documented using data sets collected over two sparsely vegetated surfaces in the San Pedro river basin: homogeneously distributed grassland and heterogeneously distributed shrubs. In the latter case the mosaic scheme seems to be more realistic given the quality of the temperature estimates. But no clear statement can be made on the efficiency of both schemes for the total fluxes. Over each site, we investigate the possibility of artificially modifying some of the surface parameters in order to get the surface fluxes simulated by the one-compartment scheme to reproduce the two-compartment ones. The 'cost' associated with this process in terms of surface temperature estimates is eventually discussed.

Introduction

Accurate estimation of the surface energy balance components is crucial to the understanding of the interactions between the hydrological cycle and climate processes at local and regional scales. This is a difficult task for many regions, but the challenge is compounded in arid and semi-arid regions due to the large spatial and temporal variability of surface characteristics such as moisture, temperature, albedo, vegetation type and cover at several nested scales.

Recently, several two-layer models (which represent the extension of the single-source or 'big leaf' approach) have been developed to estimate local scale surface fluxes over sparsely vegetated surfaces (Shuttleworth and Wallace, 1985; Choudhury and Monteith, 1988; Shuttleworth and Gurney, 1991, Lhomme *et al.*, 1994a,b; among others). These models represent the exchanges for one column of two interrelated sources of momentum, heat and vapour. The key assumption behind this approach is that it considers that water and heat enter or leave the atmosphere only via the canopy. This assumption, however, may not be always appropriate in arid and semi-arid regions where the vegetation might be interspersed by large patches of unshaded bare soil. Under such conditions, heat and mass exchanges between a part of the soil surface and the atmosphere may take place with little interaction with the adjacent canopy (Chehbouni *et al.*, 1997).

Some other models describe the sparseness with the same two sources organized in a different manner (Fig. 1): Dolman (1993) assumes that the incoming radiation and the aeordynamic fluxes simulated accordingly to Shuttleworth and Wallace (1985) are distributed between the soil and the vegetation by using a weighted average of the fractional vegetation cover f and the bare soil cover $1-f$. On the other hand, Norman *et al.* (1995) use two disconnected sources at the same location, which means that incoming radiation is intercepted by the vegetation before reaching the ground and that the aerodynamic parameters are identical for the soil and the vegetation.

Huntingford *et al.* (1995) and Blyth and Harding (1995) compared the performance of several land-surface-atmosphere schemes, namely a big leaf model, a two-layer model (Dolman, 1993) and a 'mosaic' model composed of two adjacent single source models. They found out that, with appropriate but often unrealistic values of some of the surface characteristics such as surface roughness or minimum stomatal resistance, the differences between the three schemes are generally small, but are more significant in the

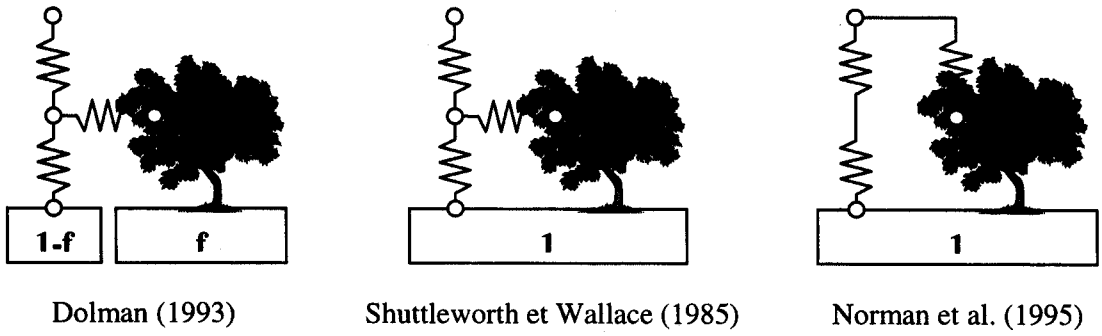

Fig. 1. *Comparative description of three Soil-Vegetation-Atmosphere interfaces.*

case of a largely non vegetated surface. Similarly, Norman *et al.* (1995) applied their model to the same MONSOON'90 data set as the one used in our study and found that their model was underestimating the sensible heat flux.

Lhomme and Chehbouni (1999) describe the discrepancy between the above-mentioned models and comment their relevance in the case of sparse vegetation. They explain why in the case of sparse vegetation radiation fluxes should be organized in a 'vertical' manner (i.e. with the assumption that the soil and the vegetation show less interaction than the dual-source approach, where the fully exposed bare soil is not receiving the total amount of incoming mass and energy) and aerodynamic fluxes in an 'horizontal' manner (i.e. with the assumption that the soil and the vegetation show more interaction than the 'mosaic' approach, where the soil and the vegetation stand side by side and do not influence each other's turbulent processes).

The objectives of this study are: (1) to compare the performances of two schemes of a Soil Vegetation Atmosphere Transfer (SVAT) model over two sparsely vegetated surfaces in the San Pedro Basin (one instrumented during the MONSOON'90 experiment, and the other during the SALSA experiment); the first scheme is based on the Shuttleworth and Wallace (1985) dual source (one-compartment) model, and the second one is a two-compartment model, the first compartment of the surface being the vegetation and the soil under the vegetation, and the second being the unshaded bare soil. (2) to investigate if some parameter values can be modified prior to the execution of the one-compartment scheme in order to compute fluxes similar to those given by the two-compartment model. This paper is organized in the following way. First, the two surface types and their related instrumentation set up are presented. Then, the one- and two- compartment SVAT models are described, with an emphasis on the radiative and turbulent transfers within and outside the canopy. Finally, the performances of both models are evaluated using the two data sets. Their relative performances are analyzed with respect to the nature of vegetation distribution and its implication for energy partitioning. In an attempt to present an analytical explanation of the results, the parameterizations of the energy balance in both schemes are compared analytically. Relevant parameters are then selected and their values are optimized to achieve the second objective. Some conclusions are drawn on the advantages and drawbacks of the different modelling strategies, and the conditions for which they could be applied successfully.

Experimental data

The data used in this study have been collected in the San Pedro river basin, located on the border between southern Arizona (USA) and northern Sonora (Mexico). This catchment covers an area of 12000 km^2 with an average altitude of 1300m above mean sea level. The climate is semi-arid, and annual precipitation in this region ranges from 250 to 500 mm year^{-1}, with approximately two thirds of the rainfall occurring in the monsoon season (July–August).

MONSOON'90 DATA SET

The MONSOON'90 multidisciplinary field campaign was conducted over the U.S. Department of Agriculture's Agricultural Research Service Walnut Gulch experimental catchment in south-eastern Arizona (31° 43′N, 110°W) during the summer of 1990 (see Kustas *et al.*, 1991, and Kustas and Goodrich, 1994). The main objective of the experiment was to investigate the potential of using multispectral, remotely sensed data in conjunction with hydrological models to quantify spatial and temporal variability of surface energy and water fluxes in arid and semi-arid regions. The study site was located in an area comprising the upper 150 km^2 of the Walnut Gulch drainage basin.

The surface soil texture was mainly sandy loam with a high fraction of rocks. The vegetation in the western half of the catchment was shrub dominated, while the eastern half was grass dominated. The data were taken from a shrub dominated site (Lucky Hills), where spatial heterogeneity between clumps of shrubs and adjacent bare soil was higher (Kustas and Goodrich, 1994). The characteristics of the vegetation are summarized in Table 1 (see Weltz *et al.*, 1994).

Table 1. Vegetation characteristics for both sites.

Site	vegetation type	LAI	% cover f	height (m)	distance between clumps (m)
Lucky Hills	small bushes	0.5	0.26	0.27	0.74
Zapata	grass clumps	0.3	0.20	0.15	0.20

The four compartments of the energy balance equation were measured using a 2 m tall roving eddy correlation tripod: ROVEC (see Stannard *et al.*, 1994). Net radiation was measured with a REBS Q6 net radiometer at a height of 1.6–1.7 m. The soil heat flux was measured using soil heat flux plates (MELCOR, CP 1.4-71-06-L). Latent and sensible heat fluxes were measured with the eddy correlation method, using a single axis sonic anemometer, a krypton hygrometer and a 12.7 mm-diameter thermocouple, all manufactured by Campbell Scientific, Inc. Measurements of wind, humidity and temperature fluctuations at 2 m height were made at 10 Hz, and 10 min. means were used to compute covariances.

In addition, the four components of the radiation budget were measured with Eppley Precision Spectral Pyranometers (PSP) and Precision Infrared Radiometers (PIR). Vapour pressure gradients were determined by measuring dew-point temperature at two heights using a Campbell Scientific, Inc. single-cooled-mirror hygrometer. The measuring heights were 1.25 and 2.25 m above the soil surface. Air temperature was measured at the same two heights, using 76 mm diameter unshielded non-aspirated chromel-constantan thermocouples. In addition, soil surface temperature was measured using an Everest Interscience (IR) sensor, model 4000 with a 15° field of view, mounted 2 m above the soil surface. Canopy temperature was measured with an Everest Interscience (IR) sensor, model 110 or model 4000 with a 3° field of view. It was mounted about 30 cm above the top of the canopy. Wind speed was measured at 1.25 and 2.25 m above the soil surface using photo-chopper anemometers with a threshold of 0.2 ms^{-1}. These sensors were sampled at 10 second intervals and the data averaged over 20 minute periods.

Additionally, daily gravimetric soil moisture samples were collected within approximately 15 m of the flux station. Three replicates from both shaded and unshaded soil were collected from the surface (0 to 5 cm) layer and converted to volumetric water content using *in situ* bulk density measurements (Schmugge *et al.*, 1994).

SALSA DATA SET

The second set of data used in this study is taken from a Mexican site that was instrumented in 1997 as part of the SALSA project (Goodrich, 1994). The objective of the investigation in the Mexican part of the Upper San Pedro basin is to understand ecosystem function better, and manage scarce natural resources by initiating the development and validation of a coupled SVAT and vegetation growth model for semi-arid regions that will assimilate remotely sensed data with several years of observed data. Instrumentation was deployed during the summer of 1997 over sparse grass at the Zapata village (31.013° N, 110.09° W). The soil is mainly sandy loam. A tower was installed to measure conventional meteorological data (incoming radiation and net radiation at a height of 1.7 m with REBS Q6 net radiometer, wind speed and direction, air temperature and humidity at 6.8 m with the eddy covariance system). Soil moisture was measured using Time Domain Reflectometry sensors (Campbell Scientific CS615 reflectometer) at four depths (5, 10, 20 and 30 cm) and a capacitance probe (ThetaProbe) that gives an integrated measurement of the water content for the first 6 cm of soil. Soil temperature and soil heat flux were measured at two locations and four depths with Campbell Scientific thermocouples and heat flux plates. Surface temperature was measured at two different view angles (0 and 45 degrees), but could not allow for the derivation of leaf and soil temperatures. Multidirectional reflectance in the RED and NIR wavebands has been measured once a week during the entire growing season. Measurements of vegetation biomass, water content and leaf area index were made once a week. An eddy covariance system developed at the University of Edinburgh : Edisol (Moncrieff *et al.*, 1997) was used to measure turbulent surface fluxes. The system is made up of a three-axis sonic anemometer manufactured by Gill instrument (Solent A1012R) and an IR gas analyzer (LI-COR 6262 model) which is used in close path mode. The system is controlled by specially written software which calculates the surface fluxes of momentum, sensible and latent heat and carbon dioxide from the output of the sonic and IR gas analyzer and displays them in real time. The software performs coordinate rotation on the raw wind speed data and allows for the delay introduced into the CO_2/H_2O signal as a result of the time of travel down the sampling tube. Vegetative characteristics are shown in Table 1.

The climate forcing used in this study covered a period of 19 days during the SALSA experiment and 13 days during the MONSOON'90 one.

Models description

THE TWO-LAYER MODEL

The two-layer model used in this study is the Simple Soil-Plant-Atmosphere Transfer model (SiSPAT). SiSPAT is a vertical, one dimensional model, forced with climatic series of air temperature, humidity, wind speed, incoming solar and long-wave radiation and rainfall (Braud *et al.*, 1995; Braud, 1996).

In the soil, coupled heat and mass transfer equations are solved for temperature T(K) and matric potential ψ (m). They include both liquid and vapour transfers according to Milly (1982):

$$C_m \frac{\partial \psi}{\partial t} = \frac{\partial}{\partial z}\left(D_{m\psi} \frac{\partial \psi}{\partial z} + D_{mT} - K \right) - \frac{S}{\rho_w} \quad (1)$$

$$C_h \frac{\partial T}{\partial \psi} = \frac{\partial}{\partial z}\left(D_{h\psi} \frac{\partial \psi}{\partial z} + D_{hT} \frac{\partial T}{\partial z} \right) \quad (2)$$

where C_m (m^{-1}) and C_h (Jm^{-3}K^{-1}) are the hydraulic and thermal capacities resp., D_{my} (ms^{-1}) and D_{mT} (m^{2}s^{-1}K^{-1}), $D_{h\psi}$ (Wm^{-2}) and D_{hT} (Wm^{-1}K^{-1}) are the hydraulic and thermal diffusitivities corresponding to the vertical gradient of ψ and T respectively, K is the hydraulic conductivity (ms^{-1}) and ρ_w is the density of liquid water (kgm^{-3}). The root extraction term S (kgm^{-3}s^{-1}) is modelled with a resistance network. The assumption that the total root-extraction equals the plant transpiration allows calculation of the leaf water potential to compute the stomatal resistance water stress function:

$$r_{sto} = r_{st\min} \frac{f_{Rg}(Rg) f_{\psi f}(\psi_f) f_{VPD}(VPD)}{LAI} \quad (3)$$

where $r_{st\min}$ (sm^{-1}) is the minimum stomatal resistance, Rg (Wm^{-2}), ψ_f (m) and VPD (Pa) are the global radiation, the leaf water potential and the vapour pressure deficit respectively, and f_{RG}, $f_{\psi f}$ and f_{VPD} are the corresponding stress functions of the stomatal resistance to the environmental factors written as subscripts. At the soil-plant-atmosphere interface, bare soil and vegetation are considered separately but interact fully within a two source model (Shuttleworth and Wallace, 1985). The vegetation is considered as semi-transparent. The incoming energy is partitioned between bare soil and vegetation through a shielding factor σ_v (Taconet *et al.*, 1986) which is expressed as a function of the leaf area index (LAI): $\sigma_v = 1 - e^{-0.4LAI}$. The multiple reflections between the soil (of albedo α_s) and the canopy (of albedo α_v) are added to the reflection on the vegetation layer. It follows that for the vegetation the reflection factor for solar radiation is $\sigma_v \alpha_v$, the absorption factor is $\sigma_v (1 - \alpha_v)$ and the transmissivity factor is $(1 - \sigma_v)$. Total or equivalent albedo for the two-layer interface is thus:

$$\alpha_e = \sigma_v \alpha_v + \sum_{i=0}^{\infty} \alpha_s^{i+1} (\sigma_v \alpha_v)^i (1 - \sigma_v)^2 \quad (4)$$

$$= \sigma_v \alpha_v + \frac{\alpha_s (1 - \sigma_v)^2}{1 - \sigma_v \alpha_v \alpha_s}$$

The sensible and latent heat flux components are calculated as follows.

Sensible (H) and latent heat flux (Le) of the two layer system can be expressed as an algebraic sum of those emanating from each source (vegetation and soil under the vegetation) and originate from the within canopy level as :

$$H = \rho c_p \frac{T_{av} - T_a}{r_{ah}} \quad (5)$$

$$Le = \frac{\rho c_p}{\gamma} \frac{e_{av} - e_a}{r_{ah}} \quad (6)$$

where ρ and γ are the density of air (kg m^{-3}) and the psychometric constant (mb K^{-1}), c_p is specific heat at constant pressure (J kg^{-1}K^{-1}). T_{av} and T_v (K) are air temperature at within-canopy source height and at a reference height above the canopy respectively. e_{av} and e_a (mb) are vapour pressure at within-canopy source height and at a reference height above the canopy respectively. r_{ah} is the aerodynamic resistance between canopy source height and above-canopy reference height. H_v, Le_v, H_{sv} and Le_{sv} are, respectively, the sensible and latent heat flux emanating from the vegetation and from the soil under the vegetation.

Following Shuttleworth and Gurney (1990), and using the Ohm's law analogy, the corresponding relationship between the fluxes, the resistances and the environmental 'potentials' is written as:

$$H_v = \rho c_p \frac{T_v - T_{av}}{r_{av}} \quad (7)$$

$$Le_v = \frac{\rho c_p}{\gamma} \frac{e_{sat}(T_v) - e_{av}}{r_{av} + r_{sto}} \quad (8)$$

$$H_{sv} = \rho c_p \frac{T_{sv} - T_{av}}{r_{asv}} \quad (9)$$

$$Le_{sv} = \frac{\rho c_p}{\gamma} \frac{e_{sv} - e_{av}}{r_{asv}} \quad (10)$$

where T_v is the canopy temperature, T_{sv} is the temperature of the soil under the vegetation (shaded soil), both in K. r_{av} is the bulk boundary layer resistance, r_{asv} is the aerodynamic resistance between shaded soil and within-canopy source height and r_{sto} is the bulk stomatal resistance, all in sm^{-1}. $e_{sat}(T_v)$ is the saturation vapour pressure at vegetation temperature, and $e_{sv}(\psi_{sv}, T_{sv})$ is the shaded soil surface vapour pressure, both in mb.

The continuity of the sensible and latent heat fluxes from the shaded bare soil and the vegetation to the atmosphere implies:

$$H = H_v + H_{sv} \tag{11}$$

$$Le = Le_v + Le_{sv} \tag{12}$$

By combining Eqns. 5, 7, 9 and 11, and solving for the unknown T_{av}, sensible heat flux for the ensemble shaded soil and vegetation can be written as a 'single source' model (Fig. 1) function of an equivalent (or 'effective') surface temperature T_e and equivalent resistance to sensible heat transfer r_{ae} (Lhomme *et al.*, 1994a,b) as:

$$H = \rho c_p \frac{T_e - T_a}{r_{ae}} \tag{13}$$

where T_e and r_e are expressed as a function of the surface temperatures and resistances as:

$$T_e = \frac{r_{av}T_{sv} + r_{asv}T_v}{r_{asv} + r_{av}} \tag{14}$$

$$r_{ae} = \frac{r_{asv}r_{av}}{r_{asv} + r_{av}} r_{ah} \tag{15}$$

Similarly, by combining Eqns. 6, 8, 10 and 12, latent heat flux for this compartment can be expressed as a function of an equivalent saturated vapour pressure e_e and an equivalent resistance to latent heat transfer r_e as:

$$Le = \frac{\rho c_p}{\gamma} \frac{e_e - e_a}{r_e} \tag{16}$$

$$e_e = \frac{(r_{av} + r_{sto})e_{sv} + r_{asv}e_{sat}(T_v)}{r_{asv} + r_{av} + r_{sto}} \tag{17}$$

$$r_e = \frac{r_{asv}(r_{av} + r_{sto})}{r_{asv} + r_{av} + r_{sto}} + r_{ah} \tag{18}$$

The interface for the one-compartment system is thus solved with the help of the following equations:

$$Rn_{sv} = H_{sv} + Le_{sv} + G_{sv} \tag{19}$$

$$Rn_v = H_v + Le_v \tag{20}$$

where G_{sv} is the soil heat flux given by:

$$G_{sv} = -\left(D_{h\psi}(\psi_{sv}, T_{sv}) \left(\frac{\partial \psi}{\partial z}\right)_{z=0} + D_{hT}(\psi_{sv}, T_{sv}) \left(\frac{\partial T}{\partial z}\right)_{z=0} \right) \tag{21}$$

and where Rn_{sv} and Rn_v are the net radiation for the shaded soil and the vegetation respectively.

The mass balance for the one-compartment scheme reads (where L is the latent heat of vaporisation):

$$\frac{Le_{sv}}{L} + q_{sv} - P\rho_w = 0 \tag{22}$$

where P is the rainfall intensity, and q_{sv} is the soil mass flux given by:

$$q_{sv} = -\rho_w \left(\begin{array}{l} D_{m\psi}(\psi_{sv}, T_{sv}) \left(\frac{\partial \psi}{\partial z}\right)_{z=0} \\ + D_{mT}(\psi_{sv}, T_{sv}) \left(\frac{\partial T}{\partial z}\right)_{z=0} - K(\psi_{sv}, T_{sv}) \end{array} \right) \tag{23}$$

In this study, the one-compartment scheme is entirely described by SiSPAT, which obviously assumes a single soil surface temperature for both shaded and unshaded bare soil. Resistance parameterizations are provided by Shuttleworth and Wallace (1991).

THE TWO-COMPARTMENT MODEL

In the mosaic approach, the surface is represented by two adjacent compartments. The first compartment containing the shaded bare soil and the overlaying vegetation is represented by the classical dual-source approach and thus described by SiSPAT. The second compartment which represents the unshaded portion of bare soil surface is described by a single source approach. This consists of a one-dimensional vertical column (Fig. 2). The shaded compartment occupies a fractional area, f, of the surface, and the second covers the complement of the surface, i.e. $1 - f$.

It was assumed here that each compartment behaves independently from the other. Therefore, momentum transfer in the atmosphere and moisture and heat transport in the soil are solved separately for each soil and atmosphere profile characteristics. It means that the turbulent mixing above the vegetated surface does not affect the processes above the unshaded bare soil, and that two separate soil-atmosphere and soil-plant-atmosphere interfaces are solved in order to provide the soil surface conditions (matric potential and temperature) for the soil heat and mass transport equations for each column. It is assumed that the surface heterogeneities do not exceed the turbulent mixing scales. Thus, the atmospheric forcing parameters can be considered constant over the entire surface (Koster and Suares, 1992). Consequently, total or composite fluxes (radiative, sensible and latent) can be expressed as an area weighted sum of the fluxes emanating from each of the two individual columns.

The net radiation over the unshaded bare soil is:

$$Rn_s = (1 - \alpha_s)Rg + \varepsilon_s(Ra - \sigma T_s^4) = Le_s + H_s + G_s \tag{24}$$

Since it is characterized by a unique temperature, a single layer approach can be applied to formulate sensible (H_s) and latent heat flux (Le_s). Following Mahfouf and Noilhan (1991), these fluxes can be expressed as:

$$H_s = \rho c_p \frac{T_s - T_a}{r_{as}} \tag{25}$$

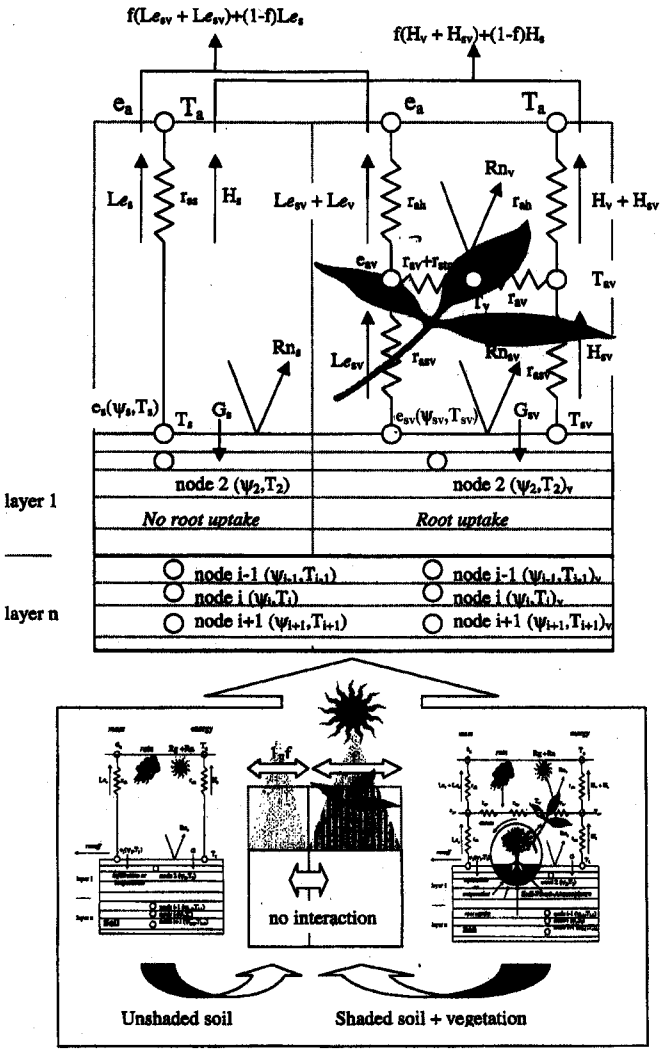

Fig. 2. *Description of the SiSPAT-based two-compartment scheme.*

$$Le_s = \frac{\rho c_p}{\gamma}\frac{e_s - e_a}{r_{as}} \tag{26}$$

where T_s (K) is the unshaded soil temperature, $e_s(\psi_s, T_s)$ is the surface vapour pressure of the unshaded soil and r_{asv} is the aerodynamic resistance between soil source height and a reference height.

The mass and energy balance for this surface are then expressed as:

$$\frac{Le_s}{L} + q_s - P\rho_w = 0 \tag{27}$$

$$Rn_s = H_s + Le_s + G_s \tag{28}$$

where

$$q_s = -\rho_w\left(\begin{array}{l} D_{m\psi}(\psi_s, T_s)\left(\dfrac{\partial\psi}{\partial z}\right)_{z=0} \\ +D_{mT}(\psi_s, T_s)\left(\dfrac{\partial T}{\partial z}\right)_{z=0} - K(\psi_s, T_s)\end{array}\right) \tag{29}$$

and

$$G_s = -\left(D_{h\psi}(\psi_s, T_s)\left(\frac{\partial\psi}{\partial z}\right)_{z=0} + D_{hT}(\psi_s, T_s)\left(\frac{\partial T}{\partial z}\right)_{z=0}\right) \tag{30}$$

are the heat and mass fluxes in the unshaded soil column respectively.

Since the total or composite aerodynamic fluxes are deduced as the area weighted average of those emanating from the two columns:

$$H = (1-f)H_s + f(H_{sv} + H_v) \tag{31}$$

$$Le = (1-f)Le_s + f(Le_{sv} + Le_v) \tag{32}$$

By combining Eqns. 13, 27 and 33, composite or total sensible heat flux can be expressed in terms of effective surface temperature (T_E) and effective resistance to sensible heat transfer (r_{aE}) as (*cf.* Fig. 3):

$$H = \rho c_p \frac{T_E - T_a}{r_{aE}} \tag{33}$$

$$T_E = \frac{(1-f)r_{ae}T_s + fr_{as}T_e}{(1-f)r_{ae} + fr_{as}} \tag{34}$$

$$r_{aE} = \frac{r_{as}r_{ae}}{(1-f)r_{ae} + fr_{as}} \tag{35}$$

In the same manner the combination of Eqns. 12, 26 and 32, allows composite or total latent heat flux to be expressed in terms of effective saturated vapour pressure (e_E) and effective resistance to latent transfer (r_E) as:

$$Le = \frac{\rho c_p}{\gamma}\frac{e_E - e_a}{r_E} \tag{36}$$

$$e_E = \frac{(1-f)r_e e_s + fr_{as}e_e}{(1-f)r_e + fr_{as}} \tag{37}$$

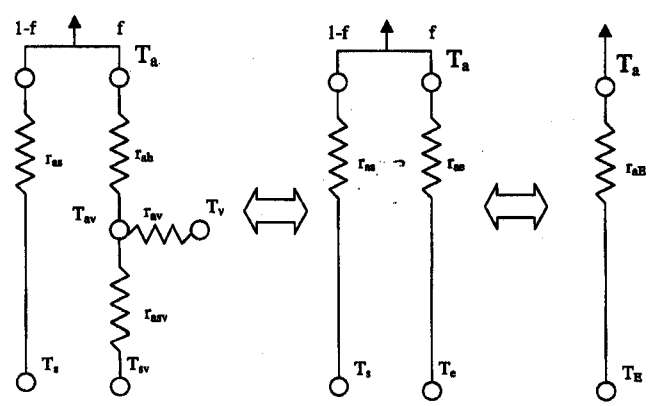

Fig. 3. *Relationship between the effective temperature and resistances for the one-compartment scheme (subscript 'e') and the two-compartment scheme (subscript 'E').*

$$r_E = \frac{r_{as} r_e}{(1-f) r_e + f r_{as}} \tag{38}$$

As mentioned previously, the single compartment scheme and the mosaic scheme use the same two-layer parameterization for the behaviour of the entire soil and the vegetation and the shaded soil and its overlying canopy respectively. However, the way the Leaf Area Index *LAI* is calculated must be adjusted in the latter case. For the two-layer scheme indeed, the surface *LAI* represents the total area of leaf per total area of soil. It stands for an average *LAI* corresponding to that of a pixel or a small field, and therefore takes into account the area of soil that is not covered by any vegetation. In the case of the mosaic scheme, the Leaf Area Index used in the two-layer scheme represents the total leaf area per area of shaded bare soil only. Since it does not take into account the unshaded bare soil, its calculation is derived from the average *LAI* by substracting the fraction of soil with zero-*LAI* covering a fraction $(1-f)$ of the soil: $LAI = f{*}CLAI + (1-f){*}0$. This clump *LAI* (*CLAI*) is thus equal to the surface *LAI* divided by the fraction cover of the vegetation f: $CLAI = LAI/f$.

Also, the roughness length of the bare soil must be adjusted to take into account the extra shear stress due to the presence of the vegetation, that is of rough elements on a smoother substrate. Raupach (1992) provides a method to evaluate the change of drag for the bare soil as a function of a 'sparseness index' $\lambda = (bh/D^2)$, where h is the height and b is the breadth of the vegetation, and D the mean distance between clumps. The new value z_{oms} is given by:

$$\frac{1}{\kappa} \ln\left(\frac{h}{z_{oms}}\right) + \Psi = C_{ds}^{-\frac{1}{2}} e^{c\lambda C_{de}^{-\frac{1}{2}}/8} \tag{39}$$

where κ is the Van Karman constant, z_{oms} the corrected roughness of the soil when rough elements are present, Y the stability correction, C_{ds} the drag coefficient of the bare soil in absence of the roughness elements, c the ratio between the theoretical and the real shelter area behind each roughness element, C_{dr} the drag coefficient of the roughness elements, (both calculated at the level corresponding to the average height of the vegetation h) and C_{de} is the equivalent drag coefficient at height h and is obtained by solving the equation

$$C_{de} = (C_{ds1} + \lambda C_{dr1}) e^{-c\lambda C_{de}^{-\frac{1}{2}}/4} \tag{40}$$

In the present case, with $c = 2$, $C_{ds} = 0.004$ and $C_{dr} = 0.4$ (values suggested by Raupach, 1992, and confirmed for the HAPEX-Sahel tiger bush by Verhoef, 1995), a value of $z_{oms} = 0.4$ cm for MONSOON'90 ($f = 0.26$ and $\lambda = 0.15$), is close to the value of 0.5 cm commonly used for a bare soil if there is no interaction. The method could not have been applied for SALSA ($f = 0.2$) because the λ value was beyond the range of applicability (0.72).

Results

Over each site, both schemes have been applied using atmospheric forcing variables and measured soil and vegetation characteristics. No calibration was performed. Results are displayed in the first two columns of Table 2 for MONSOON'90 site and in Table 3 for the SALSA'97 site, showing regression coefficients, Nash efficiency E, root mean square error RMSE and bias B between the observed and simulated values of net radiation and surface fluxes and surface temperatures.

Over the MONSOON'90 site which is a sparsely but heterogeneously distributed vegetated site, the one-compartment scheme did not give satisfactory results, especially for the net radiation and the sensible heat flux (Table 2). However, the error between the simulated and the observed values of the sensible heat fluxes stays within the range of measurement errors. The two-compartment scheme gives better estimation of both fluxes as well as for surface temperatures. As might be expected, the one-compartment scheme underestimated the overall soil temperature, and therefore the sensible heat flux. This can be explained because it assumes that incoming radiation is evenly distributed over the soil surface. This is not quite true when the vegetation is not homogeneously distributed within the surface as is the case for the MONSOON'90 site. However, the latent heat flux simulated by the mosaic scheme was smaller than the observed flux. This is coherent with a previous MONSOON'90 investigation where it was concluded that the latent heat flux measured for this site was overestimated (Houser *et al.*, 1998). In Norman *et al.* (1995), the latent heat flux was computed as the residual of the energy balance. To provide independent estimations of the fluxes, the measured latent heat fluxes have been retained in the tables. The unshaded soil temperature and the vegetation temperature of the two-compartment scheme compared better with the observed soil and vegetation temperature than those simulated with one-compartment scheme: values of efficiencies rise from 0.86 to 0.94 and from 0.72 to 0.76 respectively. This applies also for the within-soil temperatures at 2.5 cm and 15 cm (Fig. 4) where the two-compartment unshaded soil temperatures approximate fairly closely to the observations made outside the vegetation shade, while the soil temperatures of the one-compartment scheme and the shaded soil of the two-compartment scheme have much lower values. Since the radiative temperature is slightly better simulated with the one-compartment scheme, but the individual surface temperatures are not, it seems that the improvement of the two-compartment scheme is mostly due to a more accurate energy partition between the unshaded bare soil and the vegetation. This assumption could not be validated, however, in the absence of data on the individual components of the total fluxes.

Over the SALSA site, with sparsely and homogeneously distributed vegetation, the two-compartment scheme did

Table 2. Slope/intercept, Nash efficiency E, root mean square error RMSE and bias B of the regression of simulated Y^{est} vs observed Y^{obs} fluxes and temperatures for the MONSOON'90 data set (respectively*).

Slope/intercept E RMSE B	Two-compartments	One-compartment, observed parameters	One-compartment, modified parameters
Net radiation Rn (Wm^{-2})	1.01/–19 9.99 18.5 –13.3	**1.07/–15** **0.99 19.5 –5.9**	1.00/–19 9.99 18.1 –19.4
Soil heat flux G (Wm^{-2})	1.21/5 0.81 37.0 4.4	1.17/4 9.81 38.5 3.7	1.14/3 0.84 35.8 3.1
Sensible heat flux H (Wm^{-2})	1.02/4 0.90 23.9 –5.0	**0.72/–1** **0.89 19.5 –9.1**	0.90/1 0.91 21.2 –3.3
Latent heat flux Le (Wm^{-2})	0.57/24 0.65 35.0 –5.6	0.91/27 0.73 40.1 20.5	0.70/24 0.73 35.6 1.9
Radiative temperature T_{rad} (°C)	1.08/0.9 0.93 1.80 1.18	0.96/1.4 0.96 1.63 0.37	0.99/0.8 0.97 1.50 0.55
Soil temperature [1]T_s or T_{sv} (°C)	0.89/1.9 0.94 2.16 –1.31	**0.76/4.2** **0.86 1.91 –2.68**	**0.75/4.3** **0.86 1.83 –2.78**
Leaf temperature T_v (°C)	1.05/–0.4 0.76 2.46 0.7	1.12/–1.2 0.72 2.26 1.43	**1.46/–7** **0.23 2.62 2.94**

[1] Temperature of the unshaded bare soil (two-compartment scheme) or shaded soil (one-compartment scheme).

*

$$E = 1 - \frac{\sum_{i=1}^{i=n} (Y_i^{est} - Y_i^{obs})^2}{\sum_{i=1}^{i=n} (Y_i^{obs} - \overline{Y}^{obs})^2}, RMSE \sqrt{\frac{1}{n} \sum_{i-1}^{n} (Y_i^{est} - Y_i^{obs})^2} \quad \text{and} \quad B = \frac{1}{n} \sum_{i-1}^{n} (Y_i^{est} - Y_i^{obs})$$

$\overline{Y}^{obs}$ is the average of observed values

not give satisfying results, especially regarding the sensible heat flux which was overestimated (see Table 3). The classic two-layer or one-compartment approach gave better results for both sensible and latent heat flux. A sensitivity analysis has been carried out to check if different values for the most sensitive parameters (mainly soil roughness length) could improve the estimation, but none of them gave satisfaction. The fact that the two-layer scheme gives better results than the mosaic one can be explained partly by the fact that over this site vegetation cover is sparse but homogeneously distributed, so that bare soil patches between clumps of vegetation are not large compared with the width of the clumps themselves. Splitting the surface cover into two columns that interact with the atmosphere in a quasi-independent manner is not valid at this scale of heterogeneity, and a 'bulk' roughness length of one single column (intermediate between the bare soil and the vegetation roughness) is more realistic than two different roughness lengths. All errors associated with flux estimations stay within the range of measurement errors, for the one-compartment scheme as well as for the two-compartment scheme. In that case the overall performance of both models cannot be assessed.

Since for the MONSOON'90 data set the two-compartment model gives satisfactory results, the possibility of modifying some of the surface parameters in the one-

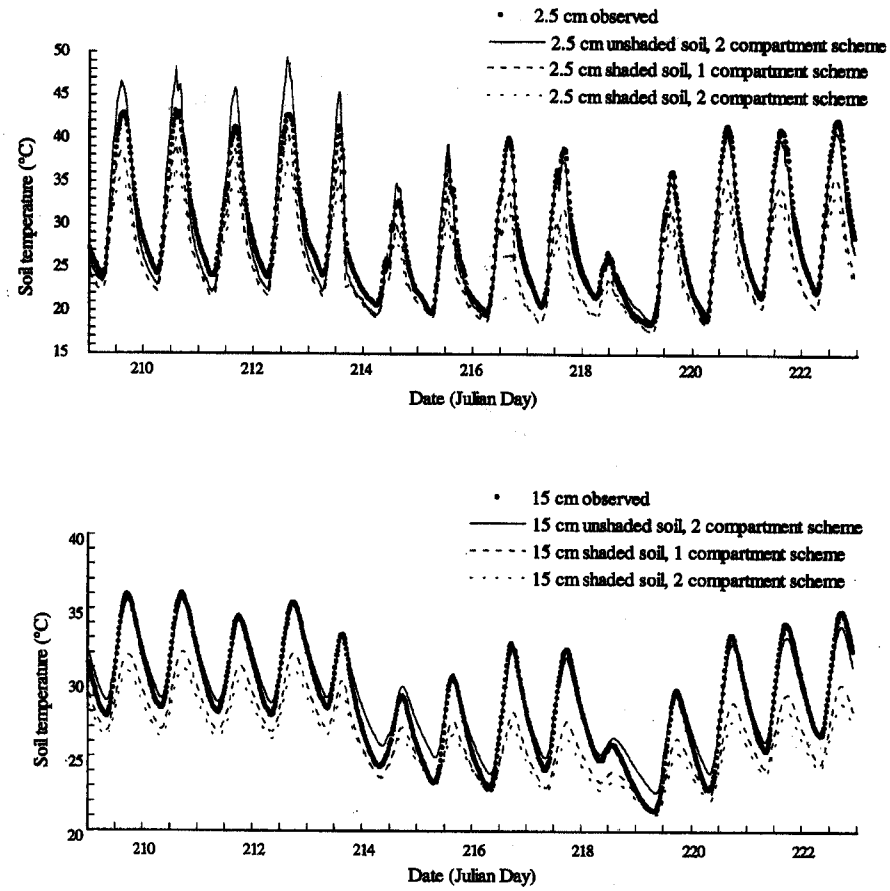

Fig. 4. *Temporal evolution of the soil temperature at 2.5 cm and 15 cm respectively as observed or simulated by the one compartment model, the unshaded soil compartment and the shaded soil compartment of the two compartment model.*

compartment model to get surface fluxes similar to those simulated by the two-compartment scheme has been investigated. However, the 'cost' associated with this process is in terms of less satisfactory surface temperature estimates.

Analytical matching

The matching between the one- and two-compartment analytical schemes is partially addressed in this section. The issue is: if the two-compartment scheme represents the surface energy balance more realistically, under which assumptions can 'artificial' values of parameters be deduced analytically based on the one-compartment formalism that produce the same fluxes as the two-compartment one? The fluxes considered here are the net radiation, the sensible heat flux and the latent heat flux.

According to the expression for the radiation balance and the evaporation calculation, some parameters were selected with respect to the following criteria : the high sensitivity of the resulting fluxes and the small number of analytical expressions in which they appear. The soil albedo and the minimal stomatal resistance (cf. Eqn. 3) were chosen upon these criteria. Indeed, soil albedo controls the partition of incoming radiation between the soil and the vegetation, and the minimal stomatal resistance determines the partition between sensible and latent heat transfers.

Since the net radiation is equal to the difference between the incoming and outgoing short- and longwave radiation, matching the net radiation for both schemes involves matching the reflection, transmission, absorption and emission of both radiation types. Matching of the albedo expressions for the one (left hand side, with the quote notation) and two (right hand side) compartment schemes means, $\alpha'_e = (1-f)\alpha_s + f\alpha_e$, where α_s and α_v are the soil and vegetation albedos respectively, and $\sigma_v = 1 - e^{-0.4CLAI}$ and $\sigma'_v = 1 - e^{-0.4CLAI}$ are the shielding factors calculated with the clump $CLAI$ and surface LAI respectively.

The soil albedo α'_s can be adjusted to match both total albedos. This gives a value for α'_s substantially higher than α_s. To compute the same net radiation with both schemes, the part of the longwave radiation balance must matched as well. However, since surface and aerodynamic temperature values are solved differently in each scheme, the difference of upward longwave radiation between both schemes (the unshaded bare soil temperature being higher than the shaded one) is analytically intractable, and must be explored with the model, using it as a 'black box' tool.

Table 3. Slope/intercept, Nash efficiency E, root mean square error RMSE and bias B of the regression of simulated Y^{est} vs observed Y^{obs} fluxes and temperatures for the SALSA data set (respectively*).

Slope/intercept E RMSE B	Two-compartments	One-compartment, observed parameters	One-compartment, modified parameters
Net radiation Rn (Wm^{-2})	1.00/–3 1.00 11.0 –3.4	0.97/–7 0.99 12.0 –10.4	1.02/–6 1.00 11.9 –3
Soil heat flux G (Wm^{-2})	0.98/–9 0.98 26.0 –9.5	1.16/–8 0.82 31.4 –6.5	1.21/–8 0.78 33.6 –6.3
Sensible heat flux H (Wm^{-2})	**1.17/9** **0.72 40.3 18.2**	0.89/7 0.89 27.1 0.9	1.04/9 0.87 28.8 11.8
Latent heat flux Le (Wm^{-2})	0.88/17 0.57 27.9 13.1	9.99/21 0.47 28.2 20.8	0.92/20 0.51 28.7 16.9

*

$$E = 1 - \frac{\sum_{i=1}^{i=n}(Y_i^{est} - Y_i^{obs})^2}{\sum_{i=1}^{i=n}(Y_i^{obs} - \overline{Y}^{obs})^2}, RMSE \sqrt{\frac{1}{n}\sum_{i-1}^{n}(Y_i^{est} - Y_i^{obs})^2} \quad \text{and} \quad B = \frac{1}{n}\sum_{i-1}^{n}(Y_i^{est} - Y_i^{obs})$$

$\overline{Y}^{obs}$ is the average of observed values

The same work can be done for the equivalent resistances. In a similar fashion, matching the resistances between the two-compartment and the one-compartment model means $r'_{ae} = r_{aE}$ for the sensible heat flux and $r'_e = r_E$ for the latent heat flux. Since the analytical expressions of the aerodynamic resistances depend not only on soil and vegetation geometrical characteristics but also on wind speed and surface temperatures, in both cases (H and Le), the same problem as for the net radiation occurs: the difference between the shaded and unshaded soil temperatures (which appear in the stability correction terms of the resistance formulation of r_{ah} and r_{as}) and the fact that they are a product of a different equilibrium prevents any analytical conclusion us from being drawing on the use of an equivalent 'effective' resistance. Analytical matching is thus impossible except if the stability correction is neglected, i.e. under quasi-neutral conditions (see below).

Using the simulated values of surface temperatures, humidities and resistances as given by the one- and two-compartment schemes for the MONSOON'90 data set, the equivalent surface resistances, humidity and temperature can be derived for both schemes. For the one-compartment scheme, the simulated equivalent aerodynamic resistance, total resistance, temperature and humidity are r_{ae}, T_e, r_e and e_e respectively. For the two-compartment scheme, they are r_{aE}, T_E, r_E and e_E. It was found that resistances are quasi identical from one scheme to the other (i.e. $r_{aE} \cong r_{ae}$ and $r_E \cong r_e$).

The effective temperatures for the one-compartment (T_e) and two-compartment (T_E) schemes were very close as well. The latter is 3% higher than the former; this implies that the difference $T_e - T_a$ is 15% lower than $T_E - T_a$. The main difference arises from the surface humidity. The equivalent humidity (e_E) of the two-compartment model is 7% lower than the one-compartment model (e_e); this implies that the difference $e_E - e_a$ is 22% lower than the difference $e_e - e_a$. This can be explained partly by the non linearity of the soil humidity formulation. In this case the minimum stomatal resistance was small and had, therefore, a small effect on the total resistance. The scatter plots of the effective temperatures, humidities and conductances are shown in Fig. 5, as well as the regression coefficients between the one-compartment and the two-compartments values. The slight underestimation of the sensible heat flux is related to the slight underestimation of both temperature and conductance in the one-compartment scheme, and inversely for the latent heat flux. Given the smaller value of the unshaded bare soil aerodynamic resistance, the equivalent temperature and humidity almost equal the unshaded bare soil temperature and humidity. Moreover, the three component equivalent resistance r_{aE} is almost equal to the unshaded

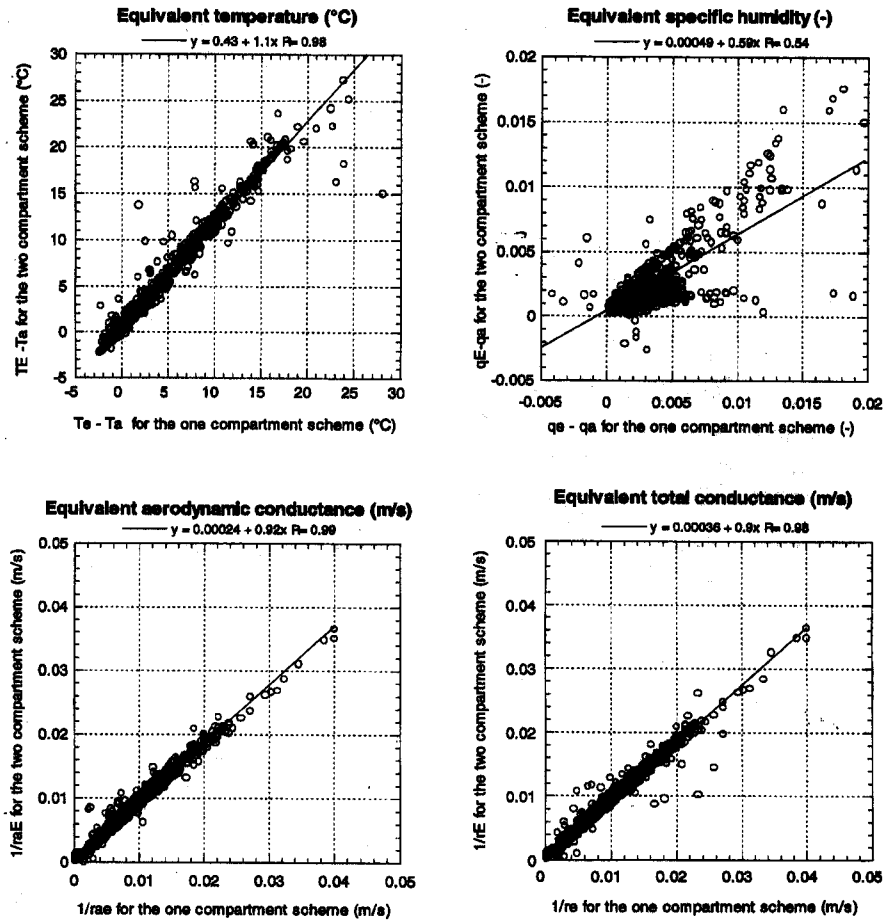

Fig. 5. *Scatter plots of the simulated two compartment vs one compartment equivalent surface to air temperature and specific humidity differences (top), and total and aerodynamic conductances (bottom).*

bare soil resistance r_{as}, even if the stability correction is not taken into account.

The two selected parameters (soil albedo α_s and minimum stomatal resistance $r_{st\min}$) have been optimized to reproduce, with the one-compartment model, the fluxes given by the two-compartment model.

For the MONSOON'90 data set, increasing the minimum stomatal resistance (from 50 to 150 s/m) and the soil albedo (from 0.24 to 0.31) to rather 'unrealistic' values improves the estimation of the energy balance by the one-compartment model (third column of Table 2). However, the resulting surface temperatures compare very badly with observations and produce an unrealistically high value of the vegetation temperature. In that case, the optimized albedo was even larger (0.30) than the value given by the analysis of the previous section (0.28).

For the SALSA data set, the same work was carried out, even if the one-compartment scheme gives satisfactory results and the values of soil albedo and minimum stomatal resistance used do not need to be modified. In that case, the albedo had to be lowered to match the net radiation between the two models. In a similar way as for the MONSOON experiment, increasing the minimal stomatal resistance produced a similar partition between the latent and sensible heat fluxes as the two-compartment model.

Conclusions

In this study, a two-compartment SVAT model was used to estimate the surface energy balance over a sparsely distributed, semi-arid vegetation. Its performance was compared with a one-compartment model. In the two-compartment model, the surface is represented by two adjacent columns: one of vegetation and its underlying shaded bare soil, and one of open, unshaded bare soil. The results show that this representation can provide an accurate description of the energy balance compared to the classical dual source model if the degree of non-uniformity (i.e. the typical length scale of the patches of bare soil between the vegetation elements) is large, which is the case in the MONSOON'90 data set. However, when the 'sparseness index' is low, the one-compartment model gives accurate results. In both cases, the differences

between fluxes computed by the one- and two-compartment schemes can be greatly reduced by changing albedo and minimum stomatal resistance values in the one-compartment model. Further study is required to determine the critical degree of sparseness above which the two-compartment model must be used. Some authors have proposed a definition of this sparseness index (Blyth and Harding, 1995; Raupach, 1992) and it can be argued that the λ formulation of Raupach (1992) is promising: whereas MONSOON'90 and SALSA have similar fractional vegetation covers, they show very different λ values and different levels of satisfaction for the application of both schemes. Another unresolved issue that needs to be addressed is the parameterization of the roughness length of the unshaded bare soil compartment. The formulation given in this paper, based on the extension of the Raupach (1992) method, is only a suggestion.

Acknowledgements

CONACYT, NASA EOS program (grant NAGW2425) and USDA-ARS (MONSOON'90 data) are gratefully acknowledged. Thanks to Chris Watts and Julio Cesar Rodriguez, Yann Nouvellon for their help during the experiment in Mexico. Many thanks to Jim Shuttleworth for his inputs during this study.

References

Blyth, E.M. and Harding, R.J., 1995. Application of aggregation models to surface heat flux from Sahelian bush, *Agric. For. Meteorol.*, **72**, 213–235.

Braud, I., 1996. *SiSPAT Version 2.0, User's Manual*, October 1996, 83 pp., available from LTHE, BP 53, 38041 Grenoble Cédex 9, France.

Braud, I., Dantas-Antonino, A.C., Vauclin, M., Thony J.L. and Ruelle, P., 1995. A Simple Soil Plant Atmosphere Transfer model (SiSPAT), Development and field verification, *J. Hydrol.*, **16**, 213–250.

Chehbouni, A., Nichols, W.D., Qi, J., Njoku, E.G., Kerr Y.H., and Cabot, F., 1997. A three component model to estimate sensible heat flux over sparse shrubs in Nevada, *Remote Sensing Rev.*, **15**, 99–112.

Choudhury, B.J. and Monteith, J.L., 1988. A four-layer model for the heat budget of homogeneous land surfaces, *Quart. J. Roy. Meteorol. Soc.*, **114**, 373–398.

Dolman, A.J., 1993. A multiple source land surface energy balance model for use in general circulation models, *Agric. For. Meteorol.*, **65**, 21–45.

Goodrich, D.C., 1994. SALSA-MEX, a large-scale Semi-Arid Land-Surface-Atmospheric Mountain EXperiment. *Proc. 1994 Intern. Geoscience and remote Sensing Sympo.* (IGARSS'94), Pasadena, CA, Aug. 8–12, 1, 190–193.

Houser, P.R., Harlow, C. and Shuttleworth, W.J., 1998. Evaluation of multiple flux measurement techniques using water balance information at a semi-arid site, *Special Symposium in Hydrology*, American Meteorological Society Meeting, Phoenix, Arizona, 11–16 January 1998, pp. 84–87.

Huntingford, C., Allen, S.J. and Harding, R.J., 1995. An intercomparison of single and dual-source vegetation-atmosphere transfer models applied to transpiration from Sahelian Savannah, *Bound. Layer Metorol.*, **74**, 397–418.

Koster, R. D. and Suares, M.J., 1992. Modeling the land surface boundary in climate models as a composite of independent vegetation stands. *J. Geophys. Res.*, **97**, 2697–2715.

Kustas, W.P. and Goodrich, D.C., 1994. Preface, *Wat. Resour. Res.*, **30**, 1211–1226.

Kustas, W. P., *et al.*, 1991. An interdisciplinary field study of the energy and water fluxes in the atmosphere-biosphere system over semi-arid rangelands: Description and some preliminary results, *Bull. Am. Meteorol. Soc.*, **72**, 1683–1706.

Lhomme, J.P, Monteny, B. and Amadou, M., 1994a. Estimating sensible heat flux from radiometric temperature over sparse millet. *Agric. For. Meteorol*, **68**, 93–105.

Lhomme, J.P., Chehbouni, A. and Monteny, B., 1994b. Effective parameters of energy balance in heterogeneous landscape, *Bound. Layer Meteorol.*, **71**, 297–30.

Lhomme, J.-P. and Chehbouni, A., 1999. Comments, About the basic equations of dual-source vegetation-atmosphere transfer models, *Agric. Forest Meteorol.* (in press).

Mahfouf, J.F., and Noilhan, J., 1991. Comparative study of various formulations of evaporation from bare soil using in situ data, *J. Appl. Meteorol.*, **30**, 1354–1365.

Milly, P.C.D., 1982. Moisture and heat transport in hysteretic inhomogeneous porous media: a matric head-based formulation and a numerical model. *Wat. Resour. Res.*, **18**, 489–498.

Moncrieff, J.B., Massheder, J.M., De Bruin, H., Elbers, J., Friborg, T., Heusinkveld, X., Kabat, P., Soegaard, H. Scott, and Verhoef, A., 1997. A system to measure surface fluxes of momentum, sensible heat, water vapor and carbon dioxide, *J. Hydrol.*, **188–189**, 589–611.

Norman, J.M., Kustas, W.P. and Humes, K.S., 1995. Source approach for estimating soil and vegetation energy fluxes in observations of directional radiometric surface temperature, *Agric. Forest Meteorol.*, **77**, 263–293.

Raupach, M.R., 1992. Drag and drag partition on rough surfaces, *Bound. Layer Meteorol.*, **60**, 375–395.

Schmugge, T.J., Jackson, T.J., Kustas, W.P., Roberts, R. and Parry, R., 1994. Microwave radiometer observations of surface soil moisture in Monsoon'90, *Wat. Resour. Res.*, **30**, 1321–1328.

Stannard, D.I., Blanford, J.H., Kustas, W.P., Nichols, W.D., Amer, S.A., Schmugge, T.J. and Weltz, M.A., 1994. Interpretation of surface fluxes measurements in heterogeneous terrain during the Monsoon'90 experiment, *Wat. Resour. Res.*, **30**, 1227–1240.

Shuttleworth, W.J. and Wallace, J.S., 1985. Evaporation from sparse crops—An energy combination theory, *Quart. J. Roy. Meteorol. Soc.*, **111**, 839–855.

Shuttleworth, W.J. and Gurney, R.J., 1991. The theoretical relationship between foliage temperature and canopy resistance in sparse crops, *Quart. J. Roy. Meteorol. Soc.*, **116**, 497–519.

Taconet, O., Bernard, R. and Vidal-Madjar, D., 1986. Evapotranspiration over an agricultural region using a surface flux/temperature model based on NOAA-AVHRR data, *J. Clim. Appl. Meteorol.*, **25**, 284–307.

Verhoef, A., 1995. Surface energy balance of shrub vegetation in the Sahel, Thesis Landbouwuniversiteit Wageningen, pp. 247.

Weltz, M. A., Ritchie, J.C. and Fox, H.D., 1994. Comparison of laser and field measurements of vegetation height and canopy cover, *Wat. Resour. Res.*, **30**, 1311–1319.