HAL open science

Theoretical and simulation results with uplink OFDM code division multiplexing in multicellular scenario

Laurent Cariou, Jean-François Hélard, Jean-Yves Baudais

To cite this version:

Laurent Cariou, Jean-François Hélard, Jean-Yves Baudais. Theoretical and simulation results with uplink OFDM code division multiplexing in multicellular scenario. IEEE GLOBECOM, Dec 2006, San Francisco, United States. pp.6. hal-00326037

HAL Id: hal-00326037

https://hal.science/hal-00326037v1

Submitted on 18 Sep 2014

HAL is a multi-disciplinary open access archive for the deposit and dissemination of scientific research documents, whether they are published or not. The documents may come from teaching and research institutions in France or abroad, or from public or private research centers.

L'archive ouverte pluridisciplinaire **HAL**, est destinée au dépôt et à la diffusion de documents scientifiques de niveau recherche, publiés ou non, émanant des établissements d'enseignement et de recherche français ou étrangers, des laboratoires publics ou privés.

THEORETICAL AND SIMULATION RESULTS WITH UPLINK OFDM CODE DIVISION MULTIPLEXING IN MULTICELLULAR SCENARIO

Laurent Cariou, Jean-François Hélard and Jean-Yves Baudais

Electronics and Telecommunications Institute of Rennes (IETR)
INSA, 20, avenue des buttes de Coesmes, 35043 Rennes, France
laurent.cariou@ens.insa-rennes.fr,{jean-francois.helard,jean-yves.baudais}@insa-rennes.fr

ABSTRACT

In this paper, we investigate the robustness of the spread spectrum multi-carrier multiple access (SS-MC-MA) technique in uplink multicellular systems. In a first step, a statistical characterization of the intercell interference is carried on to model it for BER performance simulations. Then, the impact of the intercell interference on such a scheme is evaluated and the robustness of SS-MC-MA system by mitigating those interferences thanks to frequency allocation, channel coding and spreading gain is optimized.

I. INTRODUCTION

Nowadays, some of the most promising technologies for the air interface of the fourth generation (4G) terrestrial systems, concerned by flexibility and very high spectrum efficiency, are multi-carrier spread-spectrum techniques (MC-SS). In downlink, multi-carrier code division multiple access (MC-CDMA) combines the merits of orthogonal frequency division multiplex (OFDM) with those of CDMA [1] by spreading users' signals in the frequency domain, offering a strong robustness to multipath propagation. However, in uplink, to reduce channel estimation complexity, spread spectrum multi-carrier multiple access (SS-MC-MA) has been proposed in [2]. SS-MC-MA assigns each of the N_u users exclusively its own subset of subcarriers according to an additive frequency division multiple access (FDMA) scheme. Thanks to that, the base station (BS) only has to estimate, for each subcarrier, one channel compared to N_u for uplink MC-CDMA. Moreover, self interference (SI) can easily be cancelled by single user detection (SD).

The reduction, for each user, of the number of subcarriers with SS-MC-MA, compared to MC-CDMA, can lead to a reduction in the exploitation of the frequency diversity. In order to compensate for this, the frequency allocation has to optimized. We recently proposed in [3] to use subsets of adjacent subcarriers and to allocate them to the different users by applying a frequency hopping pattern (FH). Combined with Alamouti space-time block code (STBC) [4], the monocellular efficiency of the novel scheme STBC FH SS-MC-MA as a promising system for the uplink of the future wideband wireless networks has been successfully demonstrated in the case of perfect and non-perfect channel estimation [5]. However, a lot of work has still to be done concerning multicellular aspects.

When considering the use of such techniques in cellular environments, severe performance degradations due to intercell interferences (ICI) have to be expected and evaluated. This interference level is particularly high when the system is operating with a frequency reuse factor of 1, meaning that all the BSs transmit in the same frequency band and interfere with each other.

The modelling of the ICI is the first step to get over when looking into cellular aspects. With MC-CDMA systems, it has been demonstrated in [6] that this interference could be considered as gaussian and modelled by an additive white gaussian noise (AWGN) assuming the use of scrambling codes to decorrelate the signals from neighboring cells. This article first focuses on the statistical characterization of the ICI with SS-MC-MA systems and on a way to model it for bit error rate (BER) performance calculations. Then, the impact of the ICI on such a scheme is evaluated and the robustness of SS-MC-MA system by mitigating those interferences thanks to frequency allocation, channel coding and spreading gain is optimized, assuming perfect synchronization between cells and no communications between BSs.

II. SS-MC-MA SCHEME DESCRIPTION

Figure 1 shows a simplified SS-MC-MA system for user j. After symbol mapping, a CDMA Walsh-Hadamard (WH) spreading process is applied to a defined number N_L of selected complex-valued data symbols x_l, which is equal to the length L of the spreading codes in the full-load case. Those N_L selected data symbols are multiplied by their specific orthogonal WH spreading code and superposed with each other. The resulting CDMA spread symbol $\mathbf{s}^{(j)} = [s_1^{(j)} \dots s_k^{(j)} \dots s_L^{(j)}]$ can be expressed as follows:

$$s_k^{(j)} = \sum_{l=0}^{N_L-1} x_{j,l} c_{l,k} \qquad k = 1, \ldots, L \tag{1}$$

with $c_{l,k}$ the kth chip of the WH sequence. The chips $s_k^{(j)}$ of a CDMA spread symbol are then transmitted in parallel over a subset of L subcarriers among N_c proposed by the OFDM modulation. Hence, assuming that N_c is a multiple of L, the system can support N_u spread symbols $s^{(j)}$, each user possessing its own spread symbol and its own subset of subcarriers. The chip mapping component achieves the frequency allocation which determines this subset and is more deeply presented in section IV.

At the reception, the OFDM demodulation is carried out by a simple and unique fast Fourier transform (FFT) applied to the sum of the N_u different users' signals. In order to detect the N_L transmitted symbols $x_{j,l}$, for the desired user *j*, minimum mean square error (MMSE) single user detection (SD) is applied to the received signals. Furthermore, convolutional turbo-coding associated with time interleaving, not represented in this figure are considered.

III. MULTICELLULAR HYPOTHESIS

When tackling with cellular aspects of wireless communication, a few assumptions have to be made concerning synchronization, communication between BSs and interference modelling.

Perfect synchronization between cells : In our work, we have considered a system operating with a frequency reuse factor of 1, meaning that all the BSs transmit in the same frequency band. Furthermore, synchronization between cells is assumed, which means that all the BSs follow the same uplink frame structure. Assuming a system with automatic gain control (AGC), only the MTs close to the border between two cells have a significant intercell interfering impact. The orthogonality between the subcarriers is thus kept in the receiver, thanks to the guard interval.

No communication between BSs : We consider that no information is available concerning the interfering signals and that the system must be able to operate at full capacity. This article will then focus on the mitigation of the cellular

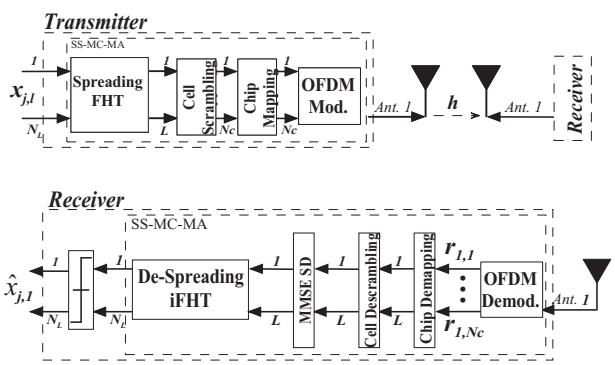

Fig. 1. SS-MC-MA transmitter and receiver for user *j*.

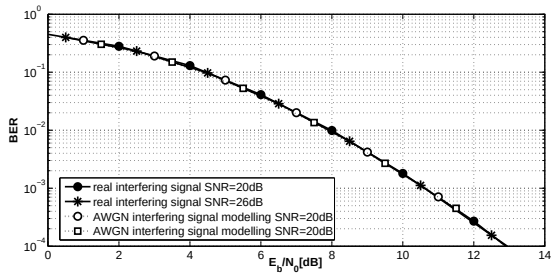

Fig. 2. Performance comparison with a real version and an AWGN modelling of the interference signal; full load coded SS-MC-MA systems; Rayleigh SISO model; MMSE SD, QPSK, channel coding rate R=1/2.

interferences thanks to frequency allocation, spreading gain and channel coding under these assumptions.

Nature of the SS-MC-MA intercell interference : For each user j, the SS-MC-MA signal observed before the OFDM modulation at the transmission side is a CDMA signal made up of chips $s_{k,n}^j$, that corresponds to the data transmitted on a subcarrier *k* and during OFDM symbol n. Constituted of a sum of N_L discrete uniform random variables, it can be considered as gaussian with zero mean and a variance equal to the transmitted power P, thanks to the central limit theorem as N_L grows. Moreover, cell scrambling codes $\mathbf{csc}_m = [csc_{m,1} \ldots csc_{m,k+L*n} \ldots csc_{m,L*N_f}]^T$ are used at a frame level on each cell m to decorrelate the signals from different cells. N_F is the number of SS-MC-MA symbols per frame. Therefore, each chip can be considered as white gaussian and expressed by:

$$s_{k,n}^j = (\sum_{l=0}^{N_L-1} x_l^j . c_{l,k}) . csc_{(m,k+L*n)} = \mathcal{N}(0, P) \tag{2}$$

If we now consider the received SS-MC-MA signal observed after the OFDM demodulation at the reception, *i.e.* after FFT process, it corresponds to the transmitted signal multiplied by the frequency response of the channel between the interfering MT and the observed BS. On each subcarrier, the interfering signal $I_{k,f}^j$ from one user j is thus in the form of a white gaussian term weighted by a frequency channel coefficient.

$$I_{k,n}^j = s_{k,n}^j . h_{k,n}^j = \mathcal{N}(0, P) . h_{k,n}^j \tag{3}$$

The pdf of the real part of this signal, in the case of a Rayleigh channel, approaches the distribution of the multiplication of two discrete gaussian terms. Figure 2 gives the BER performance of a full-load SS-MC-MA system over a Rayleigh channel with two types of ICIs, either the scrambled full-load SS-MC-MA signal (true version) or the AWGN signal (modelling version). The simulations are run with convolutional channel coding of rate $1/2$ and MMSE SD. The results are given in terms of bit energy to noise plus interference ratio $(E_b/(N_0 + I))$ and with two fixed E_b/N_0 values of 20 and 26 dB.

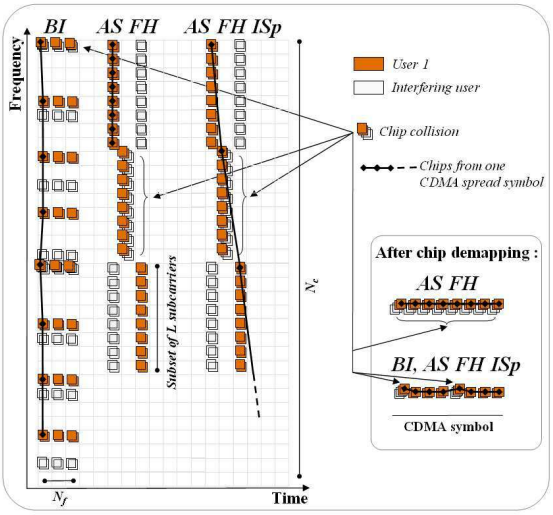

Fig. 3. Frequency allocation solutions plotted on the OFDM two-dimensional frame.

Although the modelling and true versions of the ICI don't share identical statistical characteristics (the former is a multiplication of two white gaussian terms, the latter a simple white gaussian term), their impact on BER performance are the same. We can therefore assert that for BER performance comparison, one can model the SS-MC-MA ICI with a simple AWGN term.

IV. SS-MC-MA FREQUENCY ALLOCATION

IV-A. Mono-cellular criteria

The frequency allocation determines the subset of subcarriers on which the spread symbols' chips from user j are distributed. Frequency multiplexing over the whole bandwidth can be performed to achieve the classical block interleaved (BI) SS-MC-MA as seen on figure 3), sub-optimal at once in terms of channel estimation simplicity and robustness against frequency drifts. As an alternative, we recently proposed in [3] to use subsets of adjacent subcarriers (AS) and to allocate them to the different users by applying a frequency hopping pattern (FH). The FH pattern respects a simple law $b_{i,j} = (b_{i-1,j} + inc) \mod N_s$ which allows each user to experiment equiprobably each frequency subset, while avoiding collisions between users. $b_{i,j}$ is the subset index for OFDM symbol *i* and user *j*, N_s is the number of subsets per OFDM symbol and *inc* the subset index increment selected to optimally take advantage of the frequency diversity.

In that case, it has been demonstrated that each user benefits from the frequency diversity linked to the total bandwidth, while offering a strong robustness to user's oscillators frequency shifts [7]. Furthermore, in [5], a low complexity channel estimation, based on embedded pilots, has been proposed for this scheme.

IV-B. Multicellular criteria

In multicellular systems, besides the previous criteria, we also have to weigh up the interference averaging between users for fairness considerations and the efficiency of the spreading gain offered by the CDMA dimension in order to mitigate the ICI.

With *AS FH* technique, the use of different FH patterns between cells averages perfectly the interferences among users but doesn't offer any spreading gain benefits. When a collision occurs, *i.e.* when two users from neighboring cells transmit on the same subset of subcarriers, all the chips of the interfered CDMA symbol are corrupted identically. In the worth case, the interfering power can be equal to the useful signal power. Assuming p the collision probability, the BER performance results can then be expressed by :

$$\begin{aligned} BER &= (1-p) \times BER_{E_b/N_0} + p \times BER_{E_b/(N_0+I)} \\ BER &\simeq p \times BER_{E_b/(N_0+I)} \end{aligned} \tag{4}$$

In order for the *AS FH* solution to take advantage of a spreading gain, we propose to add a chip interleaving before the chip mapping. Assuming that N_f is a multiple of L, the subset n of subcarriers, *i.e.* transmitted on OFDM symbol n, is filled with the nth chips of the L CDMA symbols instead of the L chips of the nth CDMA symbol as with *AS FH*. The collisions occur subset by subset as with *AS FH* but, due to the chip interleaving, only a few chips of the CDMA symbols are corrupted as with *BI*. With this solution, called *AS FH* with interleaved spreading (*AS FH ISp*), those interferences are averaged at the despreading process over the whole CDMA symbol, exhibiting a spreading gain. The BER performance results can be expressed by :

$$BER = BER_{E_b/(N_0+p\times I)} \tag{5}$$

Thus, *AS FH ISp* can benefit from the same spreading gain as with *BI* while keeping the advantages of the *AS FH* technique and fulfill all the mono and multicellular criteria.

V. THEORETICAL ERROR PROBABILITY CALCULATION

V-A. General MMSE SS-MC-MA error probability

We focus on the SS-MC-MA error probability study with MMSE SD for both solutions. We make the assumption that the distribution of the interference plus noise is Gaussian, which is not always true but leads to relevant results when using BPSK or QPSK modulations [8].

Since QPSK symbols are transmitted, the conditional bit error probability given the ratio γ between the signal Λ^2 and the interference plus noise power Δ^2 is :

$$Pe(\gamma) = \mathcal{Q}(\sqrt{2\gamma}) = \mathrm{Q}\left(\sqrt{2\left|\frac{\Lambda^2}{2\Delta^2}\right|}\right) \tag{6}$$

The (unconditional) bit error probability can be calculated by averaging $Pe(\gamma)$ over the variations of γ.

$$Pe = \int_0^{+\infty} \mathcal{Q}(\sqrt{2\gamma}) p_\gamma(\gamma) d\gamma \tag{7}$$

Assuming that the channel coefficients $(h_{j,k})_{j=1..N_u,k=1..L}$ are generated by N diversity branches modelled by independent identically distributed (IID) circular complex Gaussian random variables with variance δ^2, the random variable γ is $\mathcal{X}^2$ distributed with $2N$ degrees of freedom as $|h_{j,k}|$ follows a Rayleigh distribution. Therefore,

$$p_\gamma(\gamma) = \frac{1}{\alpha^N \Gamma(N)} e^{\frac{\gamma}{\alpha}} \gamma^{N-1} \tag{8}$$

Then, knowing $\alpha = \frac{1}{N}\left|\frac{\Lambda^2}{2\Delta^2}\right|$ and the diversity order N, the general form of the SS-MC-MA error probability can be written as in [9] :

$$P_e = \frac{1}{2} - \frac{1}{2}\sum_{k=0}^{N-1} \frac{\Gamma(k+1/2)}{\sqrt{\pi}(\alpha+1)^k k! \sqrt{1+1/\alpha}} \tag{9}$$

V-B. Channel modelling characteristics

The optimization of the frequency allocation with SS-MC-MA is performed with respect to the diversity and correlation characteristics of the channel. The two optimum solutions, ASFH and ASFHISp that we propose to compare here, follow the same chip distribution structure based on different subset of adjacent subcarriers as presented in figure 3. The design of those subsets respects the following constraints :

- The channel is as flat as possible within a subset of adjacent subcarriers, in order to optimize the embedded pilot channel estimation efficiency [5] which calculates the average channel coefficient on each subset.
- The different subsets are as uncorrelated as possible in order to benefit from the highest diversity.

Assuming the average channel coefficient over a subset $\bar{h_j} = \frac{1}{L}\sum_{k=0}^{L-1} h_{j,k}$ and the standard deviation per subcarrier $\epsilon_{h_{j,k}}$, we can model the channel coefficients by the sum of two IID circular complex Gaussian random variables $h_{j,k} = \bar{h_j} + \epsilon_{h_k}$. $\bar{h_j}$ is independent from one subset to an other and its variance is equal to $\delta^2 - \sigma_h^2$. ϵ_{h_k} is independant from one subcarrier to an other and its variance is equal to σ_h^2. σ_h^2 is the channel coefficient variance within one subset of subcarriers.

V-C. Quasi-static Rayleigh channel

In this section, we consider the channel as quasi-static, i.e. flat within a subset of adjacent subcarriers and independant from one subset to an other. Therefore, $\sigma_h^2 = 0$. We consider also a perfect estimation of $\bar{h_j}$.

***AS FH ISp* error probability.** The estimated data symbols $\hat{x}_j$ after equalization and despreading process can be expressed by

$$\hat{x}_j = x_j \sum_{k=1}^{L} g_{j,k}\, h_{j,k} + \sum_{\substack{i=1\\ i\neq j}}^{N_L} x_i \sum_{k=1}^{L} c_{j,k}\, c_{i,k}\, g_{j,k}\, h_{i,k} + \sum_{k=1}^{L} c_{j,k}\, g_{j,k}\, n_k \tag{10}$$

The MMSE filter output coefficients are in the form of $g_{j,k} = \frac{|h_{j,k}|}{|h_{j,k}|^2 + \frac{L}{N_L}\frac{N_0}{\mathcal{E}}}$. As the L chips of a spread symbol are distributed on L independant subsets of subcarriers, it inherit from a diversity order of $N = L$. The error probability calculation follows equation (9) with $N = L$ and $\alpha = \left|\frac{\Lambda^2_{IS_p}}{2\Delta^2_{IS_p}}\right|$ which can be expressed, thanks to the Walsh Hadamard codes properties after some straightforward calculations, by :

$$\begin{aligned} \Lambda_{IS_p} &= \mathrm{E}[z_j]\sqrt{\mathcal{E}} \\ \Delta^2_{IS_p} &= \frac{N_u - 1}{L}\left(\mathrm{E}[z_j^2] - \mathrm{E}[z_j]^2\right)\mathcal{E} + \mathrm{E}[|g_{j,k}|^2] N_0 \end{aligned} \tag{11}$$

with $z_j = g_{j,k} h_{j,k} = \frac{|h_{j,k}|^2}{|h_{j,k}|^2 + \frac{L}{N_L}\frac{N_0}{\mathcal{E}}}$. Each random variable $|h_{j,k}|^2$ is $\mathcal{X}^2$ distributed with two degrees of freedom, therefore :

$$\begin{aligned} \mathrm{E}[z_j] &= \int_0^\infty \frac{x}{x + \left(\frac{L}{N_L}\frac{N_0}{\mathcal{E}}\right)} \frac{1}{\delta^2} e^{-\frac{x}{\delta^2}} dx \\ \mathrm{E}[z_j^2] &= \int_0^\infty \frac{x^2}{\left(x + \left(\frac{L}{N_L}\frac{N_0}{\mathcal{E}}\right)\right)^2} \frac{1}{\delta^2} e^{-\frac{x}{\delta^2}} dx \\ \mathrm{E}[|g_{j,k}|^2] &= \int_0^\infty \frac{x}{\left(x + \left(\frac{L}{N_L}\frac{N_0}{\mathcal{E}}\right)\right)^2} \frac{1}{\delta^2} e^{-\frac{x}{\delta^2}} dx \end{aligned} \tag{12}$$

***AS FH* error probability.** The estimated data symbols $\hat{x}_j$ after equalization and despreading process can be expressed by

$$\hat{x}_j = x_j g_j\, h_j + g_j \sum_{k=1}^{L} c_{j,k}\, n_k \tag{13}$$

The MAI term is totally cancelled over a quasi static channel because $h_{j,k} = h_j \forall k$ The error probability calculation is then reduced to the one of a simple MMSE OFDM with $\alpha = \left|\frac{E[h]^2\mathcal{E}}{N_0}\right|$. The diversity order is $N = 1$ as the chips of each spread symbol are distributed on a single subset of subcarriers :

$$P_e = \frac{1}{\sqrt{(\pi)}} \int_o^\infty e^{-t^2}\left(1 - e^{-\frac{t^2}{\alpha}}\right) dt \tag{14}$$

V-D. Channel variation within subcarriers subsets

In this section, we consider the channel as independant from one subset to an other and correlated within each

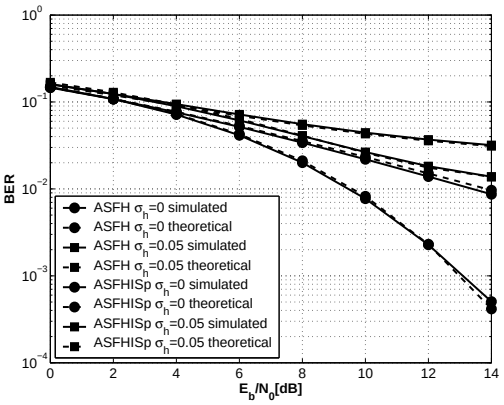

Fig. 4. Comparison of *AS FH ISp* and *AS FH* theoretical and simulated bit error probability results; full load SS-MC-MA; perfect average channel estimation, MMSE SD, QPSK

subset. Therefore, $\sigma_h^2 \neq 0$. We consider also perfect average channel estimation.

***AS FH ISp* error probability.** The MMSE filter output coefficients now equal $g_{j,k} = \frac{|\hat{h}_{j,k}|}{|\hat{h}_{j,k}|^2 + \frac{L}{N_L}\frac{N_0}{\mathcal{E}}}$, then :

$$\begin{aligned}
&\Lambda_{IS_p} \cong \mathrm{E}[z_j]\sqrt{\mathcal{E}} \\
&\Delta^2_{IS_p} = \tfrac{N_u-1}{L}\Big(\mathrm{E}[z_j^2] - \mathrm{E}[z_j]^2 + var[g_{j,k}]\mathrm{E}[|\epsilon_{h_{j,k}}|]^2 + \\
&\quad var[|\epsilon_{h_{j,k}}|^2](\mathrm{E}[|g_{j,k}|]^2 + var[\epsilon_{h_{j,k}}])\Big)\mathcal{E} + \mathrm{E}[|g_{j,k}|^2]N_0
\end{aligned}$$

$\mathrm{E}[z_j^2]$ and $\mathrm{E}[z_j]$ can be calculated with equations (12) assuming $z_j = \frac{|\bar{h}_{j,k}|^2}{|\bar{h}_{j,k}|^2 + \frac{L}{N_L}\frac{N_0}{\mathcal{E}}}$. As $g_{j,k}$ and $\epsilon_{h_{j,k}}$ are rayleigh distributed, we can also find :

$$\begin{aligned}
&\mathrm{E}[|g_{j,k}|] = \int_0^\infty \frac{x^2}{\left(x^2 + \left(\frac{L}{N_L}\frac{N_0}{\mathcal{E}}\right)\right)^2}\frac{2}{\delta^2}e^{-\frac{x^2}{\delta^2}}dx \\
&\mathrm{E}[|\epsilon_{h_{j,k}}|] = \int_0^\infty x^2\frac{2}{\delta^2}e^{-\frac{x^2}{\delta^2}}dx
\end{aligned} \tag{16}$$

***AS FH* error probability.** The estimated data symbols $\hat{x}_j$ after equalization and despreading process can be expressed by

$$\hat{x}_j = x_j\bar{h} + \sum_{l=0}^{N_L-1} x_l \sum_{k=0}^{L-1} \epsilon_{h_k} c_{l,k} c_{j,k} + \sum_{k=0}^{L-1} c_{j,k} n_k \tag{17}$$

The error probability calculation is still reduced to a MMSE OFDM one with a diversity of $N = 1$ as in (14) but with $\alpha = \left|\frac{E[h]^2\mathcal{E}}{\frac{(N_L-1)}{L}\sigma_h^2 + N_0}\right|$ as demonstrated in [5].

Figure 4 presents a comparison between the theoretical bit error probability (BER) results (dashed lines) and the ones simulated over the specific Rayleigh channel (solid lines) for both solutions, confirming the exactness of the calculation. The value $\sigma_h = 0.05$ is realistic as a subset of 32 subcarriers optimized by two-dimensional spreading over a BRAN E channel at 72 km/h using the parameters from section VI-A has been measured equal to $\sigma_h = 0.021$.

As without channel coding, the two solutions don't inherit from the same diversity, a fair comparison in terms of self-interference mitigation is not feasible. However, the calculated self-interference power is found to be higher with *AS FH ISp* than with *AS FH* and the difference amplifies with increased σ_h values. Based on that, we can strongly presume that *AS FH* is more robust against self-interference than *AS FH ISp*. The simulation results presented with channel coding on figure 6 will confirm those presumptions.

VI. SIMULATION RESULTS

VI-A. System parameters

The system parameters are chosen according to the time and frequency coherence of the channel in order to match the requirements of a 4G mobile cellular system. The carrier and sampling frequencies are set to 5 GHz and 57.6 MHz respectively. The FFT size equals 1024 and the number of modulated subcarriers reaches 736. The guard interval duration is equal to 3.75 μs and the total symbol duration 21.52 μs. Channel coding is composed of a rate 1/3 UMTS turbo-coding followed by puncturing pattern defined to achieve a global coding rate *R* of 1/2. The time interleaving depth has been adjusted to the frame duration made of N_f=32 OFDM symbols. With a QPSK modulation, this leads to an asymptotical spectrum efficiency of 1 bit/s/Hz. We use a link level SISO channel model which uses the BRAN E channel average power delay profile (APDP), refering to a typical outdoor urban multi-path propagation. The measured coherence bandwidth mono-sided at 3 dB is roughly 1.5 MHz. Finally, when the MT velocity is 72 km/h, the time correlation remains close to the frame duration.

VI-B. Numerical results

All figures show the BER performance results of the scrambled SS-MC-MA system in the presence of AWGN ICI modelled by one user in a neighboring cell, presented in terms of bit energy to interference ratio (E_b/I) calculated during collisions for a given E_b/N_0.

The comparison between the two optimum frequency allocation, *AS FH* and *AS FH ISp* is presented in figure 5 without channel coding to highlight the spreading gain benefits. Perfect channel estimation is considered, the probability of collision p is fixed to 1/32 and 1/8 respectively. In order for the two solutions to share the same diversity order, the results are presented over the AWGN channel with a E_b/N_0 fixed to 8 dB. Then, in that first step, there are no intracell interferences called self interferences (SI)

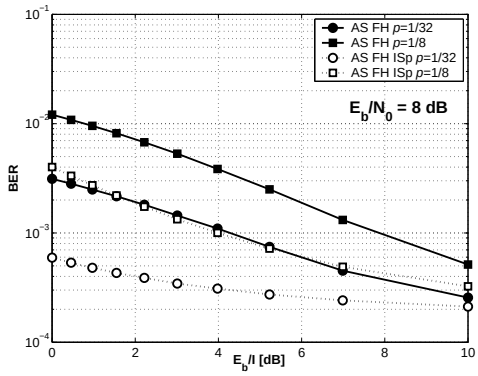

Fig. 5. Comparison of different frequency allocation techniques without channel coding; AWGN SISO model; full load SS-MC-MA; perfect channel estimation, MMSE SD, QPSK, $E_b/N_0 = 8dB$.

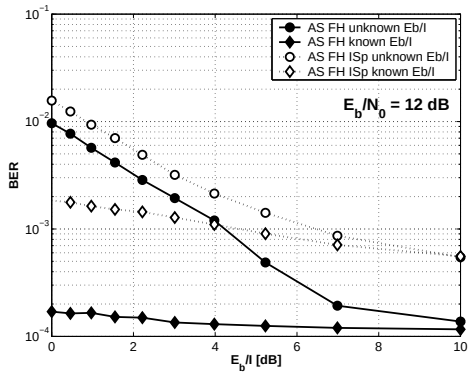

Fig. 6. Comparison of different frequency allocation techniques with channel coding; BRAN E SISO model; full load turbo-coded SS-MC-MA; embedded pilot channel estimation, MMSE SD, QPSK, R=1/2, p=1/8, MT velocity of 72 km/h, $E_b/N_0 = 12dB$.

with SS-MC-MA. In both cases, the curves behavior is shown to be suitable with the theoretical calculations as the theoretical (not plotted for readability) and simulated results perfectly overlap. As expected, it demonstrates that *AS FH ISp* solution is significantly more robust than *AS FH* against the ICI without channel coding thanks to the spreading gain.

Figure 6 shows the performance results over a BRAN E SISO channel with E_b/N_0 fixed to 12 dB, with channel turbo coding and the embedded pilot channel estimation from [5] taking into account the pilot insertion power losses and a collision probability of p=1/8. The two solutions still share the same diversity order thanks to the channel coding [3] but the SI is now non-negligible due to the selectivity of the channel. Two different cases are evaluated. The first one considers that the E_b/I is not known at the reception while the second assumes this knowledge, meaning that the collision localization has been estimated previously. The same following conclusions can be drawn with the channel model described in section V-B.

At E_b/I= 10 dB, the ICI term is negligible. As expected, *AS FH* solution exhibits better results than *AS FH ISp* because the SI is lower with *AS FH* than with *AS FH ISp* as demonstrated in section V-D. *AS FH* is then more robust against SI.

Without knowing the interference power level, neither the MMSE detection nor the channel decoding are optimum. The curve behavior underline the interest of the spreading gain especially for low interference power level. We can therefore affirm in that case, that *AS FH ISp* is more robust against ICI but more sensitive to SI. As the SI are known within the cell, it can be more easily cancelled with a little increase of complexity.

Knowing the interference power level and inserting it in the confidence value calculation, MMSE detection and channel decoding can be optimized. Channel decoding is more efficient with *AS FH* as the interferences are localized instead of being spread on all the transmitted data like with *AS FH ISp*. In that case, *AS FH* appears to be more robust against intra and intercell interferences without benefiting from the spreading gain.

VII. CONCLUSION

In this article, we have first shown that the intercell interference with uplink SS-MC-MA systems can be modelled by an AWGN signal for BER performance simulations. Then, the robustness of SS-MC-MA systems has been evaluated by comparing different interference mitigation solutions. It has been demonstrated that with channel coding and optimized confidence value calculation, it is better to transmit the CDMA spread symbols on flat fading subcarriers subset and to leave the diversity treatment and the intercell interferences mitigation to the channel decoder.

VIII. ACKNOWLEDGMENTS

The authors would like to thank France Telecom R&D/RESA/BWA which supported this work within the contract 461 28 187.

IX. REFERENCES

[1] S. Hara and R. Prasad, "Overview of multicarrier CDMA," *IEEE communication magazine*, vol. 35, no. 12, pp. 126–133, Dec. 1997.

[2] S. Kaiser and W.A. Krzymien, "Performance effects of the uplink asynchronism in a spread spectrum multi-carrier multiple access system," *European Transactions on Telecomunications*, vol. 10, no. 4, pp. 399–406, July/August 1999.

[3] L. Cariou and J.F. Helard, "MIMO Frequency Hopping Spread Spectrum Multi-Carrier Multiple Access: A Novel Uplink System for B3G Cellular Networks," *Telecommunication Systems*, vol. 30, no. 1-3, pp. 193–214, Nov. 2005.

[4] S.M. Alamouti, "A simple transmit diversity technique for wireless communication," *IEEE Journal on Selected Areas in Communications*, vol. 16, pp. 1451–1458, Oct. 1998.

[5] Laurent Cariou and Jean-Francois Helard, "A simple and efficient channel estimation for MIMO OFDM code division multiplexing uplink systems," in *Proceedings of IEEE International Workshop on Signal Processing Advances for Wireless Communications (SPAWC), New York, USA*, June 2005.

[6] X.G. Doukopoulos and R. Legouable, "Impact of the intercell interference in DL MC-CDMA systems," in *Fifth International Workshop on Multi-Carrier Spread Spectrum (MCSS'05)*, Oberpfaffenhofen, Germany, Sept 2005.

[7] A. Arkhipov and M. Schnell, "The influence of user frequency offset on the uplink performance of SS-MC-MA," *Proc. of European Conference on Wireless Technology (ECWT'03)*, pp. 451–454, Oct. 2003.

[8] M-X Chang, "Performance analysis of equalized OFDM systems in Rayleigh fading," *IEEE Transactions on Wireless Communications*, vol. 1, no. 4, pp. 721–732, Oct. 2002.

[9] John G. Proakis, *Digital communication*, McGraw Hill, 3 edition, 1995.