HAL
open science

About MEA impedance measurement and analysis

Guillaume Jean-Paul Claude Becq, Guillaume Bienkowski, Jean-Paul Diard, Catherine Villard

To cite this version:

Guillaume Jean-Paul Claude Becq, Guillaume Bienkowski, Jean-Paul Diard, Catherine Villard. About MEA impedance measurement and analysis. MEA 2008 - 6th international meeting on substrate-integrated micro electrode arrays, Jul 2008, Reutlingen, Germany. pp.277-278. hal-00318561

HAL Id: hal-00318561

https://hal.science/hal-00318561v1

Submitted on 4 Sep 2008

HAL is a multi-disciplinary open access archive for the deposit and dissemination of scientific research documents, whether they are published or not. The documents may come from teaching and research institutions in France or abroad, or from public or private research centers.

L'archive ouverte pluridisciplinaire **HAL**, est destinée au dépôt et à la diffusion de documents scientifiques de niveau recherche, publiés ou non, émanant des établissements d'enseignement et de recherche français ou étrangers, des laboratoires publics ou privés.

About MEA impedance measurement and analysis

Guillaume Becq[1], Guillaume Bienkowski[2], Jean Paul Diard[3], and Catherine Villard[2]

1 Department Image and Signal, Gipsa-lab CNRS, Grenoble, France
2 LEPMI, UMR 5631, BP 46, F-38402, St Martin d'Hères, France
3 Institut Néel, CNRS-UJF, BP166, 38042 Grenoble, France
* Corresponding author. E-mail address: catherine.villard@grenoble.cnrs.fr

Abstract

The electrode impedance Z is an important parameter for the MEA detection of neural activity. Beside the commonly admitted fact that a low Z at 1 kHz increases the signal to noise ratio, the knowledge of the Z(f) variation inside a larger frequency range is essential to simulate realistic extra-cellular data suitable for validation of spike sorting algorithms. We have thus built an experimental set-up allowing an automated MEA impedance spectroscopy. It appears clearly that Z cannot be simply described by classical electrical circuits : electrochemical circuits including for example Warburg impedance show better concordance with experimental data. Lastly, great care must be taken when giving a Z value, as it is for example strongly time dependent.

1 Experimental

The automated set-up dedicated to MEA impedance spectroscopy we have developed is shown in Fig. 1. Jointly, an electronic interface that enable MEA connection with a commercial potentiostat has been designed in order to validate our automated set-up (not shown). Calibration electrical circuits have also been designed (Fig. 2) in order to determine the cut-off frequency associated to our electronics.

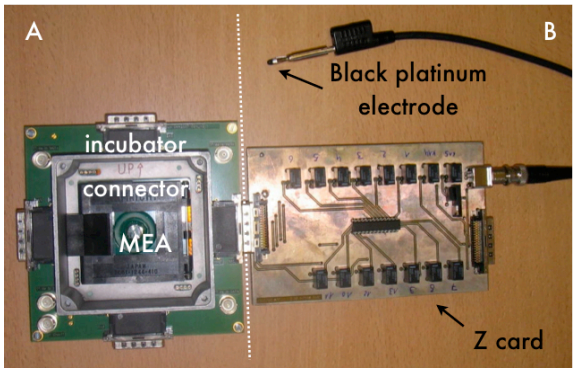

Fig. 1. Set-up for automated impedance spectroscopy. Part A is common with the experiment dedicated to neuronal signal recording while part B is the specific impedance electronic card ("Z card") developed for this study. Switches corresponding to each electrode (13 per card, 8 available positions) are seen.

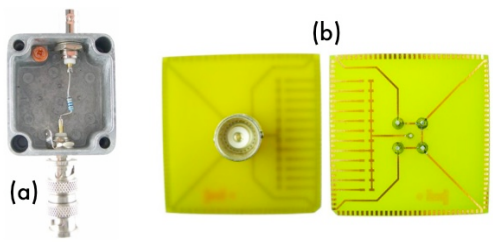

Fig. 2. Calibration electrical circuit. (a) Box with electrical components. (b) "Test MEA" built from a yellow printed circuit board.

It appears clearly that Z cannot be simply described by electrical RC parallel circuits [1] as the experimental Z(f) slope is far from the expected -1 value (Fig.3). Equivalent circuits built from four elements including resistance, capacitance and Warburg impedance [2] fit our data and can show good concordance with the physical and geometrical properties of the electrochemical system. In some cases however, we found equivalent circuits that match no evident physical interpretation, although their good description of experimental data make them useful for extra-cellular data simulations. This is the case using PBS medium, unlike concentrated KCl.

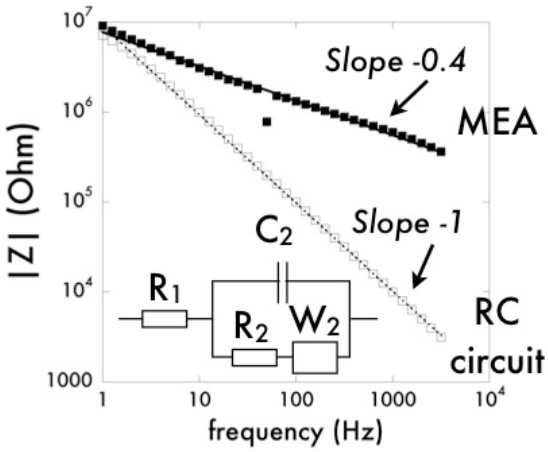

Fig. 3. Z(f) data obtained from the electrode marked in red in Fig.4(a) 30 min after the addition of a KCl 3M medium, compared to Z of a theoretical RC// circuit with R=10 MΩ and C=100nF. The equivalent electrochemical circuit fitting MEA Z(f) data is represented ($R_1 \approx 200$ kΩ, $R_2 \approx 500$ kΩ, $C_2 \approx 200$ pF, $W_2 \approx 15$ MΩ).

2 Trends in impedance measurements

Although correct measurements implies a three electrodes configuration, a two electrodes set-up like

ISBN 3-938345-05-5

our automated one provides accurate measurements if the surface of the counter electrode exceeds that of the working electrode by several order of magnitude. Ag/AgCl reference electrodes are useless, and an electrical plug covered by a thick black platinum layer has been used in our study. The differences observed between a commercial potensiostat and our electronic set-up (Fig.4) are negligeable compared to the effect of time.

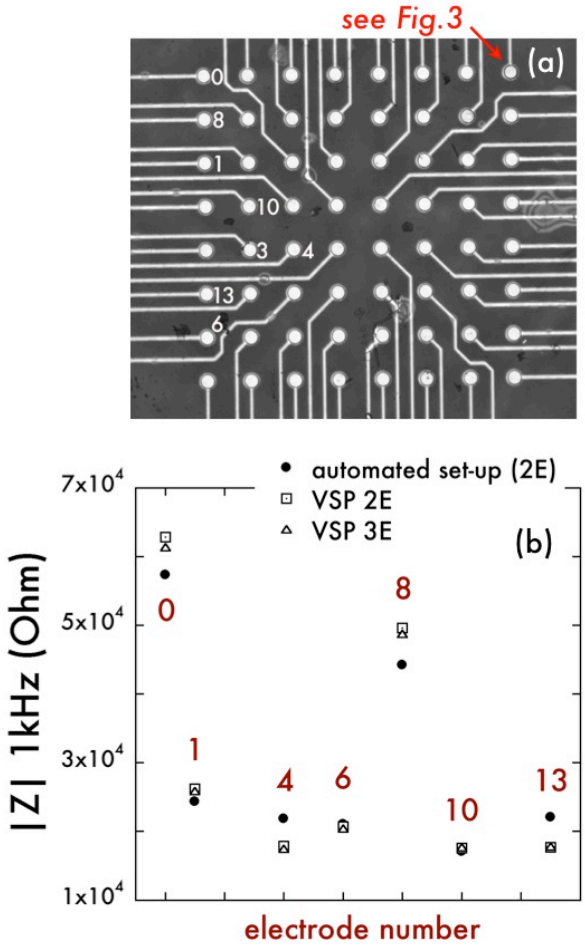

Fig. 4. (a) Picture of the MEA (purchased from Ayanda GmbH [3]). The electrodes concerned by impedance measurements are labeled. (b) Z modulus measurements performed in PBS liquid medium. Values are obtained at 1 kHz according three different experimental conditions : (i) use of the commercial Bio-Logic VSP set-up with either a 2 (2E) or a 3 (3E) electrodes configuration, the third electrode in the latter case being the MEA ground electrode, (ii) use of our automated set-up (two electrode configuration : the working micro-electrode and the plunging black platinum electrode, which behave as the reference electrode in the 3E configuration).

Impedance values at 1 kHz can indeed vary by 80%, mostly within the first minutes before stabilization, with a time constant of about 30 min using an usual medium like PBS (Fig. 5). This figure shows that the reference starting time is given by the liquid medium introduction.

Beside, the choice of the liquid medium strongly influences Z value at 1 kHz, with for example a factor three difference between PBS and saturated KCl after achieving the steady state (not shown).

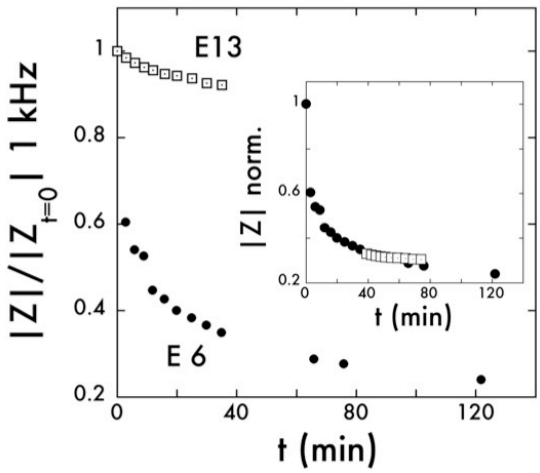

Fig. 5. Impedance kinetic on electrodes 6 (E6) and 13 (E13). For E6, the measurement started immediately after PBS medium introduction, while E13 began to be tested 39 min after E6. The normalization of the impedance has been done using the effective starting time of each experiment (main figure) or using the absolute time since the PBS introduction (inset : the E13 impedance has been normalized by the factor $\frac{1}{Z_{V13,39'}}\frac{Z_{V6,39'}}{Z_{V6,0'}}$, where $Z_{VX,\ Y'}$ corresponds to the impedance of the Xth electrode measured at the Yth minute, Y=0' being the PBS introduction time). This kinetic is clearly related to the contact between the metallic surface of the micro-electrode and the medium, as shown by the continuity between the E6 and E13 data versus time.

3 Conclusion

Impedance values are time (and medium) dependent. Thus, great care must be taken when giving micro-electrode impedance values at 1 kHz for example.

The modelisation of Z(f) variations requires electrochemical components whose significance is strongly medium dependent. The modelisation of a metal/liquid interface, fundamental for extra-cellular recording, is a difficult task for which a link between the macroscopic electrochemical description and the microscopic physical one is highly desirable, but still missing.

Acknowledgement

This project has been funded by the "Contrat de Plan Etat-Région Rhône-Alpes NAPSV" (2000-2006) and by the "Institut de Physique de la Matière Condensée" in Grenoble (2006-2007).

References

[1] Martinoia, S., Massobrio, P., Bove, M., and Massobrio, G. (2004). Cultured neurons coupled to microelectrode arrays: circuit models, simulations and experimental data. *IEEE Transactions on Biomedical Engineering, 51(5):859–864.*

[2] http://www.bio-logic.info/potentiostat/notes.html

[3] http://www.ayanda-biosys.com/