HAL
open science

Analysis of generalized bilinear systems. Application to diagnosis

José Ragot, Didier Maquin, Mohamed Darouach

To cite this version:

José Ragot, Didier Maquin, Mohamed Darouach. Analysis of generalized bilinear systems. Application to diagnosis. IMACS Symposium on Modelling and Control of Technological Systems, MCTS'91, May 1991, Lille, France. pp.528-535. hal-00315737

HAL Id: hal-00315737

https://hal.science/hal-00315737v1

Submitted on 29 Mar 2014

HAL is a multi-disciplinary open access archive for the deposit and dissemination of scientific research documents, whether they are published or not. The documents may come from teaching and research institutions in France or abroad, or from public or private research centers.

L'archive ouverte pluridisciplinaire **HAL**, est destinée au dépôt et à la diffusion de documents scientifiques de niveau recherche, publiés ou non, émanant des établissements d'enseignement et de recherche français ou étrangers, des laboratoires publics ou privés.

ANALYSIS OF GENERALIZED BILINEAR SYSTEMS APPLICATION TO DIAGNOSIS

José RAGOT, Didier MAQUIN, Mohamed DAROUACH
Centre de Recherche en Automatique de Nancy
Centre de Recherche sur la Valorisation des Minerais
Rue du doyen Marcel Roubault - BP 40 - 54501 Vandoeuvre Cedex - FRANCE

In this survey, the authors try to summarize the various aspects of data reconciliation, to point out the main difficulties and to present the state of the art in this field specially for systems described by generalized bilinear models. In practise, these models are used to describe conservation of material in total flow and partial flows for different chemical or minerallurgical species. The authors present the steps of the data reconciliation problem in the following order : techniques of data reconciliation, classification of the data by the observability concept, gross error detection and localisation, variance of measurement error estimation, sensor positioning.

KEYWORDS

Data reconciliation, analytical redundancy, observability, gross error detection, variance estimation, model based fault detection.

1. INTRODUCTION

Before improving the control of a plant, we must make sure of information coherency issued from sensors. In fact, this information can be corrupted by errors and can also deviate from the optimum functioning range. Consequently the operator must take precautions not to be outside of this range. The detection of errors is used to point out the deviations. The detection, the location, the different error characterizations and the estimation of true values are the main steps in the data reconciliation problem.

Process measurements are subject to two types of errors : firstly random errors generally taken to be independent and gaussian with zero mean and secondly gross errors which are caused by non-random events such as malfunctioning sensors, instrument biases and inexact process models.

Various methods for the detection and location of gross errors in process data have been proposed in recent years including the parity space approach, the standardized least square residuals approach and the standardized imbalance residuals approach. Process data reconciliation and its relationship to process monitoring have been the subject of many publications. For recent ones, see for example, Mah [8] or Ragot [12].

The different steps of data reconciliation will be illustrated with the support of a single example issued from minera-lurgical applications. The corresponding flowsheet is presented at figure 1 ; four nodes and nine streams are conside-red with measurements of flow (X) and concentrations in three components (cupper Y_1, lead Y_2, zinc Y_3) ; table 1 summarizes, for the different streams (Str.) the measure-ments and their respective variances (var.).

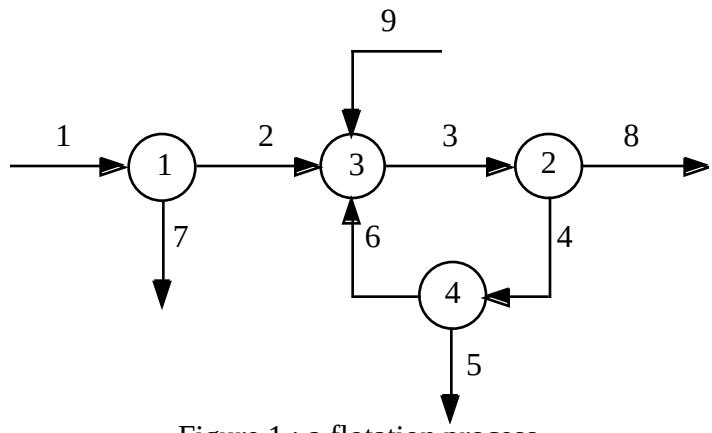

Figure 1 : a flotation process

Str.	1	2	3	4	5	6	7	8	9
X	149.0	150.0	130.0	100.0	90.0	9.0	49.0	29.0	20.0
var.	222	225	169	100	81	1	24	8	4
Y_1	8.00	9.00	9.22	14.00	7.97	9.98	5.98	13.40	9.92
var.	0.60	0.80	0.80	2.00	0.60	1.00	0.40	1.80	1.00
Y_2	13.30	9.90	12.28	13.96	23.30	19.90	20.10	6.67	20.00
var.	1.80	1.00	1.50	1.90	5.20	4.00	4.10	0.40	4.00
Y_3	6.60	6.00	6.15	5.99	5.55	10.00	8.02	11.70	4.95
var.	0.40	0.40	0.40	0.40	0.30	1.00	0.60	1.40	0.20

Table 1 : raw data and their variances

Let us now consider component balance equations around unit k of the following form :

$$\sum_{j=1}^{v} m_{kj} X_j = 0 \qquad (1a)$$

$$\sum_{j=1}^{v} m_{kj} X_j Y_{cj} = 0 \qquad c = 1, ..., p \qquad (1b)$$

where X_j is the flow rate of stream j and Y_{cj} is the molar or mass fraction of the considered component c in the jth stream and where the coefficients m_{kj} have the values 0, +1 or -1 in agreement with the streams connected to this unit.

In matrix notation, equations (1) can be written as follows :

$$M X = 0 \qquad (2a)$$

$$M X \otimes Y_c = 0 \qquad c = 1, ..., p \qquad (2b)$$

where M is the n.v incidence matrix of the process, X is the flow vector and Y_c the concentration vector of the component c and where the operator $\otimes$ gives the product of two vectors component by component.

2. DATA RECONCILIATION

The data reconciliation problem can be formulated in very simple terms. A set of measurements does not check process functioning equations. How may one correct (or reconcile) the measurements in order to force them to verify this set of equations which are supposed to be structurally exact ? With such a formulation, data reconciliation can be expressed as the research of the optimum of a function subject to constraints.

In practice, the formulation of the problem is not so easy. Indeed one is faced with the choice of hypothesis about the statistical distribution of the measurement errors, the system dimension (number of variables and constraints), the nature of the constraints (static or not, linear or not), the process state (steady-state or not), and incomplete or imperfect knowledge of the model structure or of the parameters. The presentation is limited here to steady-state systems but there are no theoretical difficulties to extend the formulation to dynamical systems.

The true values estimation or data reconciliation must be carried out taking into account the distribution and nature of the measurement errors. Gross errors which are caused by non-random events such as malfunctioning sensors, instrument biases and inexact process models must be localised and the amplitude of these errors estimated. This point will be developed further. The data reconciliation, which we present now, supposes that measurement errors are independent, gaussian with zero mean and known variance.

Let us assume that each measurement is independent and normally distributed with unknown mean and known variance ; the data validation problem is then reduced to a minimum search problem. The vectors $\hat{X}$ and $\hat{Y}_c$ of the estimated data is obtained from the measurements X and Y_c by minimizing, under the constraints (2) written for the estimations, the criterion J :

$$J = \frac{1}{2} \left(\|\hat{X} - X\|^2_{V^{-1}} + \sum_{c=1}^{p} \|\hat{Y}_c - Y_c\|^2_{V_c^{-1}} \right) \qquad (3)$$

where V and V_c are the variance-covariance matrices of the measurement errors.

We can solve this problem by classical search of the stationary point of the associated lagrangian. It is clear that the dimension of the obtained system after minimizing the lagrangian can be very important and moreover the different equations are non-linear ; however, its formulation points out the advantages of a resolution using the well known principles of decomposition and coordination of the calculus. Other principles of resolution can be applied, in particular the complete linearisation of the constraint equations ; in fact, in the case of bilinear equations it seems that the principles of hierarchical calculus are more powerful and take more advantage of the structure of the equations. An elegant formulation of this hierarchical calculus involves a direct search algorithm :

$$\hat{X} = [I - VM^T (MVM^T)^{-1} M] \, [X - V \sum_{c=1}^{p} N_c^T \lambda_c] \qquad (4)$$

$$\hat{Y}_c = [I - V_c N^T (NV_c N^T)^{-1} N \,] \, Y_c \qquad (5)$$

with :

$$\lambda_c = (NV_c N^T)^{-1} N \; Y_c \qquad (6)$$

$$N = M \, \Lambda \qquad (7)$$

$$N_c = M \, \Lambda_c \qquad (8)$$

where the diagonal matrices Λ and Λ_c have diagonal elements which are the components of same order of $\hat{X}$ and $\hat{Y}_c$.

Then each level of calculus (eq. 5 and 6) uses a projection matrix (progressively modified by the estimations of the preceding levels). The equations (5) and (6) are directly solved with the measures as initial choice of the estimations ; the convergence of the calculus is always obtained by a proper choice of a relaxation filter between the different levels. The iterations are stopped when, between two iterations, the numerical values of the estimates do not significatively vary. For the given data and flowsheet we obtain the reconciliated data of table 2. Examination of these data indicates that some raw data have been strongly corrected (by example flow X for stream 2) ; an interpretation of these corrections will be given in the section 3 which concerns gross error detection.

Str.	1	2	3	4	5	6	7	8	9
X	154.9	106.7	135.3	105.9	96.9	8.9	48.3	29.4	19.6
Y_1	8.4	9.5	9.6	8.8	8.6	10.2	5.9	12.7	10.1
Y_2	13.7	10.9	12.9	14.7	14.2	19.6	19.9	6.5	20.9
Y_3	7	6.6	6.6	5.5	5.1	10	7.8	10.6	5

Table 2 : reconciled data

3. OBSERVABILITY

The reconciliation technique which has been previously presented can be applied to systems described by algebraic linear or non linear equations when all the variables are measured. Technological and economical constraints generally prevent the measurement of all the variables. The fragmentary character of information prohibits the immediate usage of the previous methods. It is then necessary to do a preliminary quantitative analysis of all the available information in order to determine, before any calculus, those which can be corrected or deduced. This concept of observability is extremely important both for methods of solving the reconciliation problem and for the design and the analysis of systems.

Observability is based on two elementary rules derived from the analysis of a simple node of a process. Let us consider the equations of a node with v streams :

$$\begin{aligned} & a_1 X_1 + a_2 X_2 + \ldots + a_v X_v = 0 \\ & \ldots \\ & a_1 X_1 Y_{c1} + a_2 X_2 Y_{c2} + \ldots + a_v X_v Y_{cv} = 0 \\ & \ldots \\ & a_1 X_1 Y_{p1} + a_2 X_2 Y_{p2} + \ldots + a_v X_v Y_{pv} = 0 \end{aligned} \qquad (9)$$

Some of the streams are measured in X or Y_c and we want to know if the unmeasured streams can be deduced. Roughly speaking, (9) is a system of equations with a certain number of unknowns. The system can be solved depending on the number of unknowns and also on their positions in the equations. The discussion can be state using two fundamental rules.

rule 1 : if the variables X_j are all known and if the cth bilinear equation has only one unknown Y_{cj} variable, this variable can be deduced.

rule 2 : if k variables X_j (with k<v) are unknown they can be deduced if k-1 bilinear equations have their variables in Y_{cj} completely known.

These two rules must be applied to single nodes but also to aggregation of nodes. It is then necessary to detect in the flowsheet nodes with complete measurement in X, in Y_1, Y_2...

The so-called procedure BILINEAR is now given for three components but can be easily extended for a number c of components. The procedure BILINEAR is divided into two major steps. The first one, named LINEAR, is concerned with the linear observability for which an extended presentation can be found in Maquin [9] : we detect the nodes which have streams completely observed in X and the nodes which have streams completely observed in Y_1, Y_2 and Y_3. The second step is devoted to the deduction of unmeasured streams by using the mutual informations given by the X, Y_1,Y_2 and Y_3 variables.

Procedure **BILINEAR**

Initialization : the lists SOBSX, SOBSY1, SOBSY2 and SOBSY3 are filled with the numbers of the measured streams in X, Y_1, Y_2 and Y_3 ; the lists NOBSX, NOBSY1, NOBSY2 and NOBSY3 are formed with the numbers of the corresponding nodes.
Step 1 :
1a - apply procedure LINEAR to classify the X variables
if some X variables are deducible, complete the list SOBSX
complete the list NOBSX of the nodes with streams completely observed in X

1b - apply procedure LINEAR to classify the Y_1, Y_2, Y_3 variables
complete the list NOBSY1 of the nodes with streams completely observed in Y_1
complete the list NOBSY2 of the nodes with streams completely observed in Y_2
complete the list NOBSY3 of the nodes with streams completely observed in Y_3

Step 2 :
2a - find the nodes in NOBSX with one unobserved Y_1 stream ; as this value can be deduced, complete the lists SOBSY1 and NOBSY1
find the nodes in NOBSX with one unobserved Y_2 stream ; as this value can be deduced, complete the lists SOBSY2 and NOBSY2
find the nodes in NOBSX with one unobserved Y_3 stream ; as this value can be deduced, complete the lists SOBSY3 and NOBSY3

2b - find the nodes in NOBSY1 with two unobserved X streams ; as these values can be deduced, complete the lists SOBSX and NOBSX
find the nodes in NOBSY2 with two unobserved X streams ; as these values can be deduced, complete the lists SOBSX and NOBSX
find the nodes in NOBSY3 with two unobserved X streams ; as these values can be deduced, complete the lists SOBSX and NOBSX

2c - find the nodes in NOBSY1 and NOBSY2 with three unobserved X streams and complete the lists SOBSX and NOBSX (take care of the case of nodes with only two and three streams ; similar remark as the one given in step 2 of BILINEAR1 algorithm). Do the same work for the lists NOBSY2 and NOBSY3, then NOBSY3 and NOBSY1.

2d - find the nodes in NOBSY1, NOBSY2 and NOBSY3 with four unobserved X streams and complete the lists SOBSX and NOBSX (take care of the case of nodes with only two and three streams).

if SOBSX, SOBSY1, SOBSY2 or SOBSY3 have changed, go to step 1.

Note that in the cases 2b, 2c and 2d we must have at least one measured stream in X.

For the flowsheet of figure 1, consider the following measurements for flow X and components Y_1, Y_2 and Y_3 :

measured streams "X" : 5 , 9
measured streams "Y_1" : 1 , 2 , 3 , 6 , 8
measured streams "Y_2" : 2 , 3 , 5 , 6 , 7 , 8
measured streams "Y_3" : 1 , 3 , 5 , 6 , 7 , 8

The reader should verify that the application of the BILINEAR procedure gives the observable sets :

X = [2 , 3 , 4 , 5 , 6 , 8 , 9]
Y_1 = [1 , 2 , 3 , 4 , 5 , 6 , 8 , 9]
Y_2 = [2 , 3 , 4 , 5 , 6 , 7 , 8 , 9]
Y_3 = [1 , 3 , 4 , 5 , 6 , 7 , 8]

It is also possible to obtain the observation equations which would be useful to reconcile all the observable measurements.

4. GROSS ERROR DETECTION

This part of the paper presents methods of detection and location of measurement failures which are also called gross or large errors. We assume that all variables are measured (redundant system), that the measurement errors are ruled by a zero mean normal distribution with known variances, and that the process model is correct.

There are different ways to identify a large error : with a theoretical analysis of all effects leading to this error, with hardware redundancy by measuring a given process variable with different sensors, by checking the consistency of the raw data. This third alternative is selected here ; it is based on analytical redundancy by using the model equations of the process. Many publications may be consulted for that purpose, by example Jongelenen [5], Narasimhan [11], Serth [16].

The general procedure of error detection is divided into two parts :

the generation of so-called residuals, which are func-tions of measurements that are accentuated by the errors,

the detection, the isolation and the estimation of the errors.

In the following, we use the balance residuals analysis (known as method of pseudonodes) and the analysis of residuals (known as method of measurement test).
Let us return to the results given in section 2 about data reconciliation and try to analyse the data.

We first define an extended incidence matrix. For the given flowsheet four supplementary equation residuals are generated ; these equations are obtained by linear aggregation of the basic equations (equation five results from the aggregation of equations one and three, equation six from the aggregation of equations two and three, equation seven from the aggregation of equations two and four, equation eight from the aggregation of equations three and four).

Stream	1	2	3	4	5	6	7	8	9
Node									
1	1	-1	.	.	.	.	-1	.	.
2	.	.	1	-1	.	.	.	-1	.
3	.	1	-1	.	.	1	.	.	1
4	.	.	.	1	-1	-1	.	.	.
5	1	.	-1	.	.	1	-1	.	1
6	.	1	.	-1	.	1	.	-1	1
7	.	.	1	.	-1	-1	.	-1	.
8	.	1	-1	1	-1	.	.	.	1

Table 3 : extended incidence matrix

As just said, these supplementary equations are linear combinations of the basic equations ; however each of them contain specific variables which will allow gross errors detection. According to the supplementary equations the extended incidence matrix of the flowsheet is then presented in table 3 (lines 1 to 4 concern the basic nodes and lines 5 to 8 the aggregated nodes).

Table 4 gives for each node (columns one to four) and aggregated node (columns five to eight) the values of the normalized residuals (equation residuals, calculated from raw data, divided by their standard deviation).

Node	1	2	3	4	5	6	7	8
X	-2.3	0.1	2.5	0.1	-0.0	2.7	0.1	2.1
Y_1	-1.7	-2.2	1.7	2.7	-0.0	-0.5	0.0	3.0
Y_2	-1.3	0.0	1.5	-2.5	-0.1	1.6	-2.3	-0.9
Y_3	-1.5	-0.9	1.7	0.1	-0.1	0.9	-0.9	1.4

Table 4 : equation residuals for the table 1 data

For a given threshold (2 by example) we can detect the suspicious residuals due to the presence in the raw data of gross error measurements. The residual -2.3 corresponds to the flow equation of node one which uses the measurement values of the flows 1, 2 and 7 ; then we can suspect the presence of a gross error in one of these measurements. As the residual -0.0 of the equation five is "correct", the flow measurements of streams 1, 3, 6, 7, 9 used to calculate this residual are declared correct. Combining these two conclusions gives as suspicious the flow of the streams 2.

This analysis must be completed for all the residuals and may be presented with the help of the technique of residual signature. First let us define the extended residual vector ER formed with the components of the residual vector for total flow and the residual vectors for partial flow (in the given example the dimension of this extended vector is then 32). Define the logical extended residual vector R obtained from ER by the following rule :

$R(i) = 0$ if $|ER(i)| <$ threshold
$R(i) = 1$ if $|ER(i)| >$ threshold

Following the values in table 4 we obtain here :

$$R = (\ 1\ 0\ 1\ 0\ 0\ 1\ 0\ 1\ 0\ 1\ 0\ 1\ 0\ 0\ 0\ 1\ \ 0\ 0\ 0\ 1\ 0\ 0\ 1\ 0\ 0\ 0\ 0\ 0\ 0\ 0\ 0\ 0\ )$$

For a single error on a variable (flow or chemical concentra-tion) it is easy to construct the theoretical signature by only examining if this variable appears in the different balance equations. By example if flow 6 is faulty the balance equations (for total and partial flows) of nodes 3, 4, 5, 6, 7 are faulty (see column 6 of table 3) and therefore the corres-ponding signature is :

$$S_{X6} : (\ 0\ 0\ 1\ 1\ 1\ 1\ 1\ 0\ 0\ 0\ 1\ 1\ 1\ 1\ 1\ 0\ \ 0\ 0\ 1\ 1\ 1\ 1\ 1\ 0\ 0\ 0\ 1\ 1\ 1\ 1\ 1\ 0\ )$$

If concentration of component 2 in stream 4 is faulty the balance equations (for partial flow of component 2) of nodes 2, 4, 6 and 8 are faulty (see column 4 of table 3) and therefore the corresponding signature is :

$$S_{Y24} : (\ 0\ 0\ 0\ 0\ 0\ 0\ 0\ 0\ 0\ 0\ 0\ 0\ 0\ 0\ 0\ 0\ \ 0\ 1\ 0\ 1\ 0\ 1\ 0\ 1\ 0\ 0\ 0\ 0\ 0\ 0\ 0\ 0\ )$$

The localisation of the suspicious data may be achieved by comparison of the experimental signature R with the 36 pre-established signatures S. This comparison is achieved by evaluating the "distances" between the vector R and the vectors S ; the smallest distance enables the determination of the suspicious data. The procedure is easily extended to the localisation of two (or more) suspicious data ; in that case the R vector is compared to the vectors obtained by logical addition of two (or more) S vectors.

The table 5 gives the values of the relative corrections of the data after reconciliation ; a relative correction is the absolute difference between the measurement and the estimation divided by the measurement. It clear appears that prohibitive corrections have been done ; unfortunately it is difficult to locate with a great precision the corresponding faulty data. The application of the gross error detection procedure (by distances evaluation) points out different suspicious data : stream 2 in X, stream 4 in Y_1, stream 5 in Y_2 and streams 2 and 8 in Y_3. We then delete variables 2 in X, 4 in Y_1, 5 in Y_2 and in order to have a minimal set of suspicious sensors we delete only one variable in Y_3 ; the two possibilities have been tested and the more significative has been retained. The table 6 gives the relative corrections of the data after reconciliation (note that the symbol _ is due to the impossibility to calculate the relative corrections) ; it can be seen that the relative corrections are kept in a "correct" range.

Str.	1	2	3	4	5	6	7	8	9
X	4	29	4	6	8	1	2	1	2
Y_1	5	5	4	37	8	2	1	5	2
Y_2	3	10	5	5	39	1	1	2	4
Y_3	76	10	7	8	9	0	2	10	2

Table 5 : corrections (in %), before gros error elimination

Str.	1	2	3	4	5	6	7	8	9
X	0	_	1	0	1	0	0	0	0
Y_1	0	1	0	_	1	0	0	1	0
Y_2	0	1	0	1	_	0	0	0	0
Y_3	1	0	1	0	0	0	0	_	0

Table 6 : corrections (in %), after gros error elimination

5. VARIANCE MEASURES ESTIMATION

Most of the reconciliation techniques are based on the assumption that the measurement errors are random variables obeying a known statistical distribution. Almost without exception the techniques start with a given known covariance matrix of measurement errors. Almasy [1] has proposed a method of estimating this matrix which makes use of available data and takes into account the reconcilia-tion point of view ; some additional illustrations are given in Darouach [3]. Recently, Ragot [13] also proposed a method which allows simultaneously the estimation of the variance matrix and the reconciliation of the data on several time intervals.

We limit this presentation of one time interval. In this time interval the process is running near around the "functioning point" marked by *. Let us consider X^* and Y_c^* the vectors of the true values which have been measured m times. The measurement equations may be expressed as :

$$X_i = X^* + \varepsilon_{Xi} \qquad i = 1, ..., m \tag{10a}$$

$$Y_{ci} = Y_c^* + \varepsilon_{Yci} \qquad i = 1, ..., m \quad c = 1, ..., p \tag{10b}$$

According to the hypothesis of normal error distribution the probability density function of the measurements is expressed :

$$F(\varepsilon) = (2\pi)^{-\frac{vm}{2}} |V|^{-\frac{m}{2}} \prod_{c=1}^{p} |V_c|^{-\frac{m}{2}}$$
$$\exp(-\frac{1}{2} \sum_{i=1}^{m} (\| \varepsilon_{Xi} \|^2_{V^{-1}} + \sum_{c=1}^{p} \| \varepsilon_{Yci} \|^2_{V_c^{-1}})) \tag{11}$$

Maximizing this function, in respect to X^*, Y_c^*, V and V_c and under the two constraints of balance, gives the following results :

$$V = \frac{1}{m} \mathrm{diag}(\sum_{i=1}^{m} (\hat{X} - X_i) (\hat{X} - X_i)^T) \tag{12a}$$

$$V_c = \frac{1}{m} \mathrm{diag}(\sum_{i=1}^{m} (\hat{Y}_c - Y_{ci}) (\hat{Y}_c - Y_{ci})^T) \qquad c = 1, ..., p \tag{12b}$$

$$\hat{X} = (I_v - VM^T(MVM^T)^{-1}M) (\bar{X} - \frac{1}{m} V \sum_{c=1}^{p} N_c^T \lambda_c) \tag{13a}$$

$$\hat{Y}_c = (I_v - V_cN^T(NV_cN^T)^{-1}N) \bar{Y}_c \qquad c = 1, ..., p \tag{13b}$$

with the definitions :

$$\bar{X} = \frac{1}{m} \sum_{i=1}^{m} X_i \tag{14a}$$

$$\bar{Y}_c = \frac{1}{m} \sum_{i=1}^{m} Y_{ci} \tag{14b}$$

$$\lambda_c = m (NV_cN^T)^{-1} N \bar{Y}_c \qquad c = 1, ..., p \tag{15}$$
$$N = M \Lambda \tag{16}$$
$$N_c = M \Lambda_c \tag{17}$$

where the diagonal matrices Λ and Λ_c have elements which are the components of same order of $\hat{X}$ and $\hat{Y}_c$.

This algorithm has been applied to the process described by figure 1 with the data of table 7. These data are given for three measurements around a steady-state of the process and concern the flows and the three components. The table 8 gives the obtained results concerning the estimation of the flows and the component concentrations and also the corresponding standard deviations (S.d.) directly computed from the estimated covariance matrices. It should be noted that we obtain a good estimation of the variance measurements although only a few data have been used.

Str.	1	2	3	4	5	6	7	8	9
X	139.0	103.5	125.0	85.8	85.4	9.2	56.4	30.0	19.9
	161.5	99.2	135.2	107.2	96.3	9.1	40.2	28.9	25.9
	157.4	109.5	144.7	111.4	93.5	9.4	41.4	27.4	24.5
Y_1	7.3	8.2	9.4	7.9	7.3	10.4	5.7	13.7	10.3
	7.4	7.8	9.1	9.0	8.1	9.6	5.8	12.8	11.3
	7.5	9.5	8.2	8.3	7.4	9.5	5.5	12.7	10.7
Y_2	13.5	8.6	9.6	12.6	13.9	19.4	22.2	7.2	20.1
	15.1	9.7	10.1	15.4	13.3	16.7	16.6	6.1	19.4
	11.1	10.4	11.8	12.5	14.3	17.9	20.1	6.5	20.7
Y_3	5.9	5.5	6.3	4.8	5.4	10.6	8.8	6.1	5.9
	7.4	7.1	6.5	6.7	4.6	7.9	8.9	7.2	4.2
	6.6	5.8	6.5	6.2	6.8	10.4	8.0	6.2	5.0

Table 7 : flow and composition measurements

Str.	1	2	3	4	5	6	7	8	9
X	154.8	105.8	127.9	98.9	89.6	9.2	49.0	29.0	12.8
S.d.	10.02	4.57	10.72	11.50	5.07	0.12	7.95	1.09	10.90
Y_1	7.44	8.28	8.65	7.40	7.15	9.85	5.64	12.91	10.83
S.d.	0.09	0.76	0.57	1.10	0.57	0.40	0.13	0.47	0.42
Y_2	13.57	10.86	12.30	13.99	13.58	17.93	19.43	6.54	20.09
S.d.	1.68	1.49	2.03	1.43	0.48	1.11	2.32	0.46	0.53
Y_3	6.99	6.28	6.41	6.36	6.01	9.80	8.53	6.57	5.08
S.d.	0.71	0.71	0.10	0.93	1.00	1.24	0.40	0.50	0.69

Table 8 : flow, components and standard deviations estimations

6. SENSOR POSITIONING

Data validation, as previously described, is considered as an analysis stage and it gives the user coherent statistical information. Additionally, the above may be completed by a more ambitious study introducing modifications of the instrumental scheme. Firstly, it is necessary to analyse the lack of information and to make the user aware of the instrumental inadequacy of certain parts of the process. Secondly, in order to make the process information fuller, an understanding of its deficiency enables the satisfactory localization of sensors. However, in practice, the introduc-tion of such supplementary

sources of information must take into account economic and technical constraints. It is important to propose amongst the range of possible choices, taking restrictions into account, the one which minimizes the number of further sensors.

For the sake of brevity, we restricted ourselves to the presentation of an original method which can be used for the placement of sensors in systems described by 3-bilinear equations.

$$M\,X = 0 \qquad [18a]$$
$$M\,X \otimes Y_c = 0 \qquad c = 1, 2, 3 \qquad [18b]$$

Some variables are measured, others can not be measured and the remaining are free. For the network of figure 1 let us consider the following vectors of variables, where the subscripts m, M, and $\bar{m}$ relate to the streams which are measured, measurable and unmeasured :

$$X_m = (X_1\ X_5\ X_9)^T$$
$$X_M = (X_4\ X_6\ X_7)^T$$
$$X_{\bar{m}} = (X_2\ X_3\ X_8)^T$$

$$Y_{1m} = (Y_{11}\ Y_{15}\ Y_{18})^T$$
$$Y_{1M} = (Y_{13}\ Y_{16})^T$$
$$Y_{1\bar{m}} = (Y_{12}\ Y_{14}\ Y_{17}\ Y_{19})^T$$

$$Y_{2m} = (Y_{22})^T$$
$$Y_{2M} = (Y_{23}\ Y_{26}\ Y_{29})^T$$
$$Y_{2\bar{m}} = (Y_{21}\ Y_{24}\ Y_{25}\ Y_{27}\ Y_{28})^T$$

$$Y_{3m} = (Y_{31}\ Y_{34})^T$$
$$Y_{3M} = (Y_{33}\ Y_{36}\ Y_{38})^T$$
$$Y_{3\bar{m}} = (Y_{32}\ Y_{35}\ Y_{37}\ Y_{39})^T$$

As this example is simple enough it would be possible to analyse by hand the different situations. However we directly examine this analysis for a general process.

In systems described by linear equations the method used for placing of sensors is based on the identification of equations with more than one unknown. According to the nature of these unknowns (whether measurable or unmea-surable) we may or may not be able to place additional sensors to make the system observable.

The generalized bilinear case can be treated by this method but it is more complicated due to the interactions between the variables X and Y_c. That is deductions on X depend not only on the X variables but also on the Y_c variables which are in the bilinear equations in X and Y_c. This implies that placing an additional sensor on a stream X (or Y_c) simulta-neously modifies the observability of X and Y_c.
For a proper understanding of these interactions the elemen-tary rules of observability of linear equations in X and bilinear in X and Y_c should be remembered referring to Crowe [2] and Ragot [14].

1 - An equation (or group of equations) with only one unknown in X is observable : the X variable can be deduced directly from a linear equation.

2 - An equation (or group of equations) having all its variables in X known and only one unknown in a vector Y_c is observable : the unknown variable in Y_c can be deduced from the bilinear equation.

3 - An equation (or group of equations) with only k unknown variables X and all its variables in (k-1) vectors Y_c known is observable. The p unknown variables in X can be deduced from a linear equation and (k-1) bilinear equations.

The principle for locating sensors is based directly on this analysis. An additional sensor (the generalisation to more than one is obvious) which is added to make a system completly observable should be placed according to one of the three situations given below.

1 - For an equation (or group of equations) with two unknown variables in X and one unknown variable in a vector Y_c, two types of action can be taken. Placing a sensor on an X stream leads to situation 1. The remaining X variable becomes deducible. This leads to situation 2 and the Y_c variable becomes deducible. If it is possible to place a sensor on a Y_c stream this leads to situation 3. The two X variables are then deducible.

2 - For an equation (or group of equations) with all the variables in X known and two variables in a vector Y_c unknown, the placing of a sensor on one of the two unmeasured variables in Y_c streams leads to situation 2. The remaining Y_c variable can be deduced.

3 - For an equation (or group of equations) with k unknown variables in X and k-2 vector Y_c with all their variables known, the placing of a sensor on an X stream leads to situation 3. The two X other streams become deductible. If it is possible to place a sensor on a Y stream in order to obtain a supplementary vector Y_c complety known, this also leads to situation 3.

4 - For an equation (or group of equations) with k+1 unknown variables in X and k-1 vector Y_c with all their variables known, we may adopt the same conclusions as in case 3.

The general algorithm for placing sensors makes an intensive use of an algorithm of linear observability as related in Maquin [9, 10] and of the algorithm for placing sensors issued from the analysis of the incidence matrix. It should be noted that the partitioning is first done for the X variables then for the Y variables. Partitioning by X variables is used directly for placing additional X sensors. On the other hand partitioning by Y variables which are linked to the X variables in the bilinear equations cannot be used directly for placing additional sensor. It only gives the list of bilinear equations with completely measured Y variables and those equations with all measured streams except one.

For the given configuration, the reader can verify that the use of supplementary sensors defined in the lists X_s, Y_{1s}, Y_{2s}, Y_{3s} :

$$X_s = (X_4)^T \qquad Y_{1s} = (Y_{13}\ Y_{16})^T$$
$$Y_{2s} = (Y_{23}\ Y_{26})^T \qquad Y_{3s} = (Y_{33}\ Y_{36})^T$$

allows the deduction of other data defined in the lists X_d, Y_{1d}, Y_{2d}, Y_{3d} :

$$X_d = (X_2\ X_3\ X_6\ X_7\ X_8)^T \qquad Y_{1d} = (Y_{14})^T$$
$$Y_{2d} = (Y_{29})^T \qquad Y_{3d} = (Y_{35}\ Y_{38})^T$$

and one notice that some sensors, which could be used, have not been : X_6 X_7 Y_{29} Y_{38} (moreover these last variables are deducible).

CONCLUSION

For the class of processes described by bilinear generalized equations, we have illustrated through a given example the different steps of data reconciliation. The application to n-linear generalized equations could be a straightforward extension.

REFERENCES

[1] Almasy, G.A. and Mah, R.S.H., "Estimation of measurement error variances from process data", *I.E.C. Proc. Des. Dev.*, vol. 23, p. 779-784, 1984.

[2] Crowe, C.M., "Observability and redundancy of process data for steady-state reconciliation", *Chem. Eng. Sci.*, vol. 44, n° 12, p. 2909-2917, 1989.

[3] Darouach, M., Ragot, J., Zasadsinski, M. and Krzakala, G., "Maximum likelihood estimator of measurement error variances in data reconciliation", Congrès IFAC AIPAC' 89, Nancy, 3-5 juillet 1989.

[4] Holly, W., Cook, R. and Crowe, C.M., "Reconcilia-tion of mass flow rate measurement in a chemical extraction plant", *Can. J. Chem. Eng.*, vol. 67, August, p. 595-601, 1989.

[5] Jongenelen, E.M., Hever, C.D. and Van Zee, G.A., "Detection of gross errors in process data using studentized residuals", *Comp. Chem. Eng.*, vol. 12, n° 8, p. 845-847, 1988.

[6] Kratz, F., Ragot, J., Maquin, D. and Despujols A., "Detection of bias in measurement using analytical redundancy". 7th international symposium IMEKO on technical diagnostics, Helsinki, 1990.

[7] Kretsovalis, A. and Mah, R.S.H., "Observability and redundancy classification in generalized process networks, 1 : theorems", 2 : algorithms". *Comp. Chem. Eng.*, vol. 12, n° 7, p. 671-703, 1988.

[8] Mah, R.S.H. and Tamhane, A.C., "Detection of gross errors in process data", *AIChE J.*, vol. 28, n° 5, p. 828-830, 1982.

[9] Maquin, D., "Observabilité, diagnostic et validation de données des procédés industriels", Thèse de l'Université de Nancy I, novembre 1987.

[10] Maquin, D., Darouach, M. and Ragot J., "Observa-bilité et validation de mesures des systèmes bilinéaires", Congrès IFAC AIPAC' 89, Nancy, 3-5 juillet 1989.

[11] Narasimhan, S. and Mah, R.S.H., "Treatment of general steady state process models in gross error identification, *Comp. Chem. Eng.*, vol. 13, n° 7, p. 851-853, 1989.

[12] Ragot, J., Darouach, M., Maquin, D. and Bloch, G., *Validation de données et diagnostic*. Traité des nouvelles technologies, série diagnostic et mainte-nance, Hermès, 431 p., 1990.

[13] Ragot, J., Maquin, D., Chafouk, H. and Aitouche A., "Data reconciliation with unknown variance", 7th international symposium IMEKO on technical diagnostics, Helsinki, 1990.

[14] Ragot, J., Maquin, D., Bloch, G. and Gomolka, W., "Observability and variables classification in bilinear processes", *Journal A*, vol. 31, n° 4, p. 17-23, 1990.

[15] Rosenberg, J., Mah, R.S.H. and Iordache, C., "Evaluation of schemes for detecting and identifying gross errors in process data", *I.E.C. Res.*, vol. 26, n° 3, p. 555-564, 1987.

[16] Serth, J.E. and Heenan, W.A., "Gross error detection and data reconciliation in steam-metering system". *AIChE J.*, vol. 32, n° 5, p. 733-742, 1986.

[17] Tamhane, A.C. and Mah, R.S.H., "Data reconcilia-tion and gross error detection in chemical process network". *Technometrics*, vol. 27, n° 4, p. 409-422, 1985.