HAL
open science

STBC MC-CDMA systems: Comparison of MMSE single user and multiple user detection schemes over Rayleigh and MIMO METRA channels

Jean-Michel Auffray, Jean-Yves Baudais, Jean-François Hélard

To cite this version:

Jean-Michel Auffray, Jean-Yves Baudais, Jean-François Hélard. STBC MC-CDMA systems: Comparison of MMSE single user and multiple user detection schemes over Rayleigh and MIMO METRA channels. European Transactions on Telecommunications, 2004, 15 (3), pp.275-281. 10.1002/ett.973 . hal-00283525

HAL Id: hal-00283525

https://hal.science/hal-00283525v1

Submitted on 18 Sep 2014

HAL is a multi-disciplinary open access archive for the deposit and dissemination of scientific research documents, whether they are published or not. The documents may come from teaching and research institutions in France or abroad, or from public or private research centers.

L'archive ouverte pluridisciplinaire **HAL**, est destinée au dépôt et à la diffusion de documents scientifiques de niveau recherche, publiés ou non, émanant des établissements d'enseignement et de recherche français ou étrangers, des laboratoires publics ou privés.

Special Issue on Multi-Carrier Spread-Spectrum

STBC MC-CDMA systems: comparison of MMSE single-user and multiple-user detection schemes over Rayleigh and MIMO METRA channels

Jean-Michel Auffray, Jean-Yves Baudais and Jean-François Hélard*

Institut d'électronique et de télécommunication de Rennes—IETR INSA, 20 avenue des Buttes-de-Coësmes, 35043 Rennes, France

Summary

The performance of MMSE single-user detection (SD) and multi-user detection (MD) STBC multi-carrier code division multiple access (MC-CDMA) systems are analysed and compared in the case of two transmit antennas and one or two receive antennas over Rayleigh fading channels and then over the stochastic multiple input multiple output (MIMO) METRA channel model. With two transmit and one receive antennas, MD achieves a gain of roughly 1 dB for non-full load systems while the same performance is obtained with MD and SD for full load systems. Besides, with two receive antennas, we present a sub-optimal and an optimal MMSE SD MIMO MC-CDMA schemes, this last one offering a very good performance. Finally, the very good behaviour of MMSE space-time block coding (STBC) MC-CDMA systems is confirmed over the realistic multi element transmit receive antennas (METRA) MIMO channel.
Copyright © 2004 AEI.

1. INTRODUCTION

Nowadays, multi-carrier code division multiple access (MC-CDMA) is the most promising candidate for the air interface downlink of the 4th Generation mobile radio systems. MC-CDMA combines the robustness of orthogonal frequency division multiplex (OFDM) modulation with the flexibility of CDMA [1]. On the other hand, multiple input multiple output (MIMO) communication systems, by using several antennas at the transmitter and at the receiver, inherit space diversity to mitigate fading effects. When the channel is not known at the transmitter, taking benefit of the transmit diversity requires methods such as space-time coding which uses coding across antennas and time [2]. For example, space-time block coding (STBC), as proposed by Alamouti in Reference [3] and Tarokh in Reference [4], provides full spatial diversity gains, no intersymbol interference and low complexity maximum likelihood (ML) receiver if transmission matrix is orthogonal. Moreover with STBC, only one receive antenna can be used, leading in that case to MISO (multiple input single output) systems.

In Reference [5], it has been shown that unity-rate Alamouti's STBC QPSK MC-CDMA outperforms half-rate Tarokh's STBC 16-QAM MC-CDMA, while offering the same effective throughput of 2 bit/s/Hz without channel coding. Indeed, in order to maintain the same effective throughput, half-rate STBC codes have to be employed in conjunction with higher modulation schemes as 16-QAM, which are more prone to errors and hence degrade the performance of the system. Moreover, unity-rate STBC code combined with channel-coded schemes as turbo-codes provides substantial performance improvement over the non-unity-rate STBC. Hence for the same effective throughput, reduction in coding rate is best invested in turbo-codes, rather than STBC.

In this paper, we compare in the downlink case and without channel coding the performance for Alamouti's

* Correspondence to: Jean-François Hélard, Institut National des Sciences Appliquées, Départment ESC, Institut d' Electronique et de Télécommunications de Rennes, IETR-UMR CNRS 616420 20, Avenue des Buttes de Coësmes, CS 14315, 35043 Rennes Cedex, France.
E-mail: jean-francois.helard@insa-rennes.fr

Contract/grant sponsor: European FP5 IST project MATRICE.

STBC MC-CDMA systems combined with multi-user detection (MD) or single-user detection (SD) schemes. For this comparison, the considered detection schemes are based on mean square error (MSE) criterion, since MMSE detection is known as the most efficient SD technique [6]. In order to obtain asymptotic performance, the algorithms are evaluated over Rayleigh fading channels in the first part. Then, some further results are given over the more realistic stochastic MIMO channel model developed with the European IST multi element transmit receive antennas (METRA) project.

2. SYSTEM DESCRIPTION

Figure 1 shows the considered MIMO MC-CDMA system for the jth user based on Alamouti's STBC with $N_\mathrm{t} = 2$ transmit antennas and $N_\mathrm{r} = 2$ receive antennas [3]. Each user j transmits simultaneously from the two antennas the symbol x_j^0 and x_j^1 at time t, and the symbols $-x_j^{1*}$ and x_j^{0*} at time $t + T_x$, where T_x is the OFDM symbol duration. At the output of the space-time encoder, the data symbols x_j^0 and x_j^1 of the N_u users are multiplied by their specific orthogonal Walsh–Hadamard spreading code $\mathbf{c}_j = [c_{j,1} \ldots c_{j,k} \ldots c_{j,L_\mathrm{c}}]^T$ where $c_{j,k}$ is the kth chip and $[\cdot]^T$ denotes matrix transposition. $\mathbf{c}_j$ is the jth column vector of the $L_\mathrm{c} \times N_\mathrm{u}$ spreading code matrix $\mathbf{C}$. In this paper, the length L_c of the spreading sequences is equal to the number N_c of subcarriers and to the maximum number N_u of simultaneous active users in the full-load case. Each data symbol x_j is then transmitted in parallel on N_c QPSK modulated subcarriers. The vector obtained at the rth receive antenna after the OFDM demodulation and deinterleaving, at time t and $t + T_x$, is given by:

$$\mathcal{R}_r = \mathcal{H}_r \mathcal{C} \mathcal{X} + \mathcal{N}_r, \text{ with } \mathcal{H}_r = \begin{bmatrix} \mathrm{H}_{1r} & \mathrm{H}_{2r} \\ \mathrm{H}_{2r}^* & -\mathrm{H}_{1r}^* \end{bmatrix} \quad (1)$$

where $\mathcal{R}_r = [\mathbf{r}_r^T(t)\mathbf{r}_r^H(t+Tx)]^T$, with $\mathbf{r}_r(t) = [r_{r,1}(t) \ldots r_{r,k}(t) \ldots r_r, N_\mathrm{c}(t)]^T$ the vector of the N_c received signals at time t and $[\cdot]^H$ denotes the Hermitian transpose (or conjugate transpose), $\mathbf{H}_{tr} = \mathrm{diag}\{h_{tr,1}, \ldots, h_{tr,N_\mathrm{c}}\}$ $(t, r \in \{1,2\})$ is a $N_\mathrm{c} \times N_\mathrm{c}$ diagonal matrix with $h_{tr,k}$ the complex channel frequency response, for the subcarrier k between the transmit antenna t to the receive antenna r. Time invariance during two MC-CDMA symbols is assumed to permit the recombination of symbols when STBC is used. $\mathcal{C} = \mathrm{diag}\{\mathbf{C}, \mathbf{C}\}$ with $C = [\mathbf{c}_1 \ldots \mathbf{c}_j \ldots \mathbf{c}_{N_\mathrm{u}}]$ is the $L_\mathrm{c} \times N_\mathrm{u}$ matrix of user's spreading codes with the column vector c_j equal to the spreading code of user j and $\mathcal{X} = [\mathbf{x}^{0T}\mathbf{x}^{1T}]^T$ where $\mathbf{x}^0 = [x_1^0 \ldots x_j^0 \ldots x_{N_\mathrm{u}}^0]^T$. $\mathcal{N}_r = [\mathbf{n}_r^T(t)\mathbf{n}_r^H(t+T_x)]^T$ with $\mathbf{n}_r(t) = [n_{r,1}(t) \ldots n_{r,k}(t) \ldots n_{r,N_\mathrm{c}}(t)]^T$ is the additive white gaussian noise (AWGN) vector with $n_{r,k}(t)$ representing the noise term at subcarrier k, for the rth receive antenna at time t with variance given by $\sigma_k^2 = \mathrm{E}\{|n_k|^2\} = N_0 \forall k$.

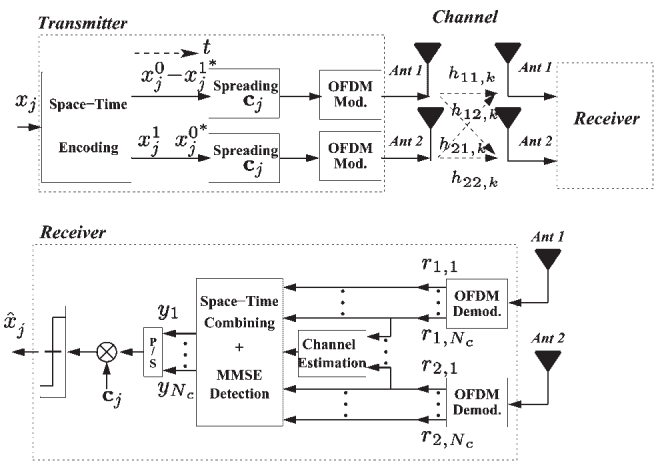

Figure 1. MC-CDMA transmitter and receiver for user j with transmit and receive diversity.

3. MULTI-USER DETECTION VERSUS SINGLE USER DETECTION IN THE MIMO AND MISO CASES

In the receiver, in order to detect the two transmitted symbols x_j^0 and x_j^1 for the desired user j, SD or MD detection schemes based on the MSE criterion are applied to the received signals in conjunction with STBC decoding. In the SISO case, it has been shown in Reference [6] that MMSE SD is the most efficient SD scheme, while MMSE MD, also called global-MMSE (GMMSE), is optimal according to the MSE criterion for any number of active users and any power distribution [7]. Here we compare in the MISO case MMSE SD with a new MMSE MD algorithm. Besides, in the MIMO case, an optimal and a sub-optimal MMSE SD algorithms are presented and compared.

3.1. MMSE single-user detection in the MISO and MIMO Cases

After equalisation, for each receive antenna r, the two successive received signals are combined. The resulting signals from the N_r receive antennas are then added to detect the two symbols x_j^0 and x_j^1. After despreading and

threshold detection, the detected data symbols $\hat{x}_j^0$ and $\hat{x}_j^1$ for user j are:

$$\left[\hat{x}_j^0 \hat{x}_j^1\right]^T = \left(\mathbf{I}_2 \otimes c_j^T\right)\mathcal{Y} = \left(\mathbf{I}_2 \otimes \mathbf{c}_j^T\right)\sum_{r=1}^{N_\mathrm{r}} \mathcal{G}_r \mathcal{R}_r \qquad (2)$$

with

$$\mathcal{G}_r = \begin{bmatrix} \mathrm{G}_{1r} & \mathrm{G}_{2r}^* \\ \mathrm{G}_{2r} & -\mathrm{G}_{1r}^* \end{bmatrix}$$

where $\mathbf{I}_2$ is the 2×2 identity matrix, $\otimes$ is the Kronecker product, $\mathcal{Y} = [y_1^0 \ldots y_k^0 \ldots y_{N_\mathrm{c}}^0 y_1^1 \ldots y_k^1 \ldots y_{N_\mathrm{c}}^1]^T$ is the vector of the received signals equalised and combined from the N_r antennas, $\mathbf{G}_{tr}$ is a diagonal matrix containing the equalisation coefficients for the channel between the transmit antenna t and the receive antenna r for the N_c subcarriers. To detect for example x_i^0, the MMSE SD coefficients $g_{tr,k}$ minimises the mean square value of the error e_k^0 between the signal $\sum_{i=1}^{N_\mathrm{u}} c_{i,k} x_i^0$ transmitted on subcarrier k and the assigned output y_k^0 of the equaliser.

In the MIMO case, two MMSE SD coefficients can be derived. The MMSE (1) SD coefficients are the MMSE SD of the MISO case which are applied at each receive antenna in the MIMO case. To detect for example x_j^0, MMSE (2) SD coefficients minimises the mean square value of the error e_k^0 between $\sum_{i=1}^{N_\mathrm{u}} c_{i,k} x_i^0$ and the received signal equalised and combined from the N_r receive antennas by the Alamouti's decoding. Besides, no knowledge of the spreading codes $\mathbf{c}_i (i \neq j)$ of the interfering users is required to derive the MMSE SD coefficients.

Table 1 gives the MMSE SD equalisation coefficients $g_{tr,k}$ and the resulting equalised channel coefficients $h_{eq,k}^0$ and $h_{eq,k}^1$ to detect x_i^0 and x_i^1 respectively. For the optimal MMSE (2) SD algorithm, $N_\mathrm{t} \times N_\mathrm{r}$ channel coefficients $h_{tr,k}$ are taken into account, while only N_t are considered for MMSE (1) SD algorithm. Thus, an excessive noise amplification for low subcarrier signal to noise ratio $\gamma_{r,k}$ is more unlikely with this new MMSE (2) SD algorithm than with MMSE (1) SD algorithm. In both cases, to detect for example x_i^0, the interference terms generated by x_i^1 are cancelled, i.e., $h_{eq,k}^1 = 0$. On the other hand, for large SNR, MMSE SD restores the orthogonality among users, i.e. $h_{eq,k}^0$ tends to 1 when $\gamma_{r,k}$ increases.

Table 1. MMSE SD equalisation coefficients $g_{tr,k}$ and resulting equalised channel terms $h_{eq,k}^0$ and $h_{eq,k}^1$ to detect the symbol x_j^0 for the sub-optimal MMSE (1) SD and optimal MMSE (2) SD schemes.

	MMSE (1) SD	MMSE (2) SD
$g_{tr,k}$	$\frac{h_{tr,k}^*}{\sum_{t=1}^{N_\mathrm{t}} \lvert h_{tr,k}\rvert^2 + \frac{1}{\gamma_{r,k}}}$	$\frac{h_{tr,k}^*}{\sum_{t=1}^{N_\mathrm{t}} \sum_{r=1}^{N_\mathrm{r}} \lvert h_{tr,k}\rvert^2 + \frac{1}{\gamma_{r,k}}}$
$h_{eq,k}^0$	$\frac{\sum_{t=1}^{N_\mathrm{t}} \sum_{r=1}^{N_\mathrm{r}} \lvert h_{tr,k}\rvert^2}{\sum_{t=1}^{N_\mathrm{t}} \lvert h_{tr,k}\rvert^2 + \frac{1}{\gamma_{r,k}}}$	$\frac{\sum_{t=1}^{N_\mathrm{t}} \sum_{r=1}^{N_\mathrm{r}} \lvert h_{tr,k}\rvert^2}{\sum_{t=1}^{N_\mathrm{t}} \sum_{r=1}^{N_\mathrm{r}} \lvert h_{tr,k}\rvert^2 + \frac{1}{\gamma_{r,k}}}$
$h_{eq,k}^1$	0	0

3.2. MMSE multi-user detection in the MISO case

Contrary to MMSE SD, MD is carried out by exploiting the knowledge of the spreading codes $\mathbf{c}_i (i \neq j)$ of the interfering users. As the optimum ML detector is too complex, we consider here sub-optimal linear MMSE MD which is optimal according to the MSE criterion, and applied here for the first time to space-time block coded signals. The MMSE MD technique aims to minimise the mean square error at the input of the threshold detector between the transmitted symbol x_j and the estimated one. The two detected data symbols $\hat{x}_{j,\mathrm{opt}}^0$ and $\hat{x}_{j,\mathrm{opt}}^1$ for user j are:

$$\begin{aligned}\left[\hat{x}_{j,\mathrm{opt}}^0 \hat{x}_{j,\mathrm{opt}}^1\right]^T &= \mathcal{W}_{j,\mathrm{opt}}^H \mathcal{R} = \left(\mathbf{I}_2 \otimes \mathbf{c}_j^T\right)\mathcal{G}_r^H \mathcal{R} \\ &= \begin{bmatrix} \mathbf{w}_{j,\mathrm{opt}}^{0H} & 0 \\ 0 & \mathbf{w}_{j,\mathrm{opt}}^{1H} \end{bmatrix} \begin{bmatrix} \mathbf{r}_r(t) \\ \mathbf{r}_r^*(t+T_x) \end{bmatrix}\end{aligned} \qquad (3)$$

where $\mathcal{W}_{j,\mathrm{opt}}^H$ is the optimal $2 \times 2L_\mathrm{c}$ weighting matrix and $\mathcal{G}_r^H$ is the equalisation coefficient matrix of the MISO channel at the antenna r. According to the Wiener filtering, the optimal weighting matrix is the matrix which minimises the mean square error $\mathrm{E}[|\mathbf{W}_j^H \mathcal{R} - [x_j^0\, x_j^1]^T|^2]$. The $L_\mathrm{c} \times 1$ weighting vectors $\mathbf{w}_{j,\mathrm{opt}}^0$ and $\mathbf{w}_{j,\mathrm{opt}}^1$ to detect x_j^0 and x_j^1 respectively are equal to:

$$\mathbf{w}_{j,\mathrm{opt}}^0 = \Gamma_{\mathcal{R},\mathcal{R}}^{-1} \Gamma_{\mathcal{R},x_j^0} \quad \mathbf{w}_{j,\mathrm{opt}}^1 = \Gamma_{\mathcal{R},\mathcal{R}}^{-1} \Gamma_{\mathcal{R},x_j^1} \qquad (4)$$

where $\Gamma_{\mathcal{R},\mathcal{R}}$ is the autocorrelation matrix of the received vector $\mathcal{R}$, and $\Gamma_{\mathcal{R},x_j^0}$ and $\Gamma_{\mathcal{R},x_j^1}$ are the cross-correlation vector between the received signal vector $\mathcal{R}$ and the desired symbol x_j^0 and x_j^1 respectively. Hence, the optimal weighting matrix is:

$$\mathcal{W}_{j,\mathrm{opt}}^H = E_s \left(\mathbf{I}_2 \otimes \mathbf{c}_j^T\right)\mathcal{H}^H \left(\mathcal{H}\mathcal{C}\Gamma_{\mathcal{X},\mathcal{X}}\mathcal{C}^T\mathcal{H}^H + \Gamma_{\mathcal{N},\mathcal{N}}\right)^{-1} \qquad (5)$$

where $E_s = E[|x_j|^2]$, $\Gamma_{\mathcal{X},\mathcal{X}}$ is the autocorrelation matrix of the transmitted symbols vectors $\mathcal{X}$, $\Gamma_{\mathcal{N},\mathcal{N}}$ is the autocorrelation matrix of the noise vector $\mathcal{N}$.

In the full load case ($N_\mathrm{u} = L_\mathrm{c}$) and only in that case, the four equalisation coefficient matrices $\mathbf{G}_{tr}$ included in $\mathcal{G}_r$ are diagonal matrix with the kth subcarrier equalisation coefficient equal to the coefficient obtained for MMSE SD given in Table 1 for $N_\mathrm{r} = 1$. In the non-full load case ($N_\mathrm{u} < L_\mathrm{c}$), the matrices $\mathbf{G}_{tr}$ are no more diagonal. In that

case, the MMSE MD algorithm outperforms the MMSE SD algorithm, since the MMSE MD scheme minimises the decision error taking into account the despreading process instead of minimising the error independently on each subcarrier.

However, applying the optimal weighting matrix given by Equation (5) implies to solve a $2L_c \times 2L_c$ linear system, whatever the number N_u of active users. An alternative formulation, completely equivalent and still optimum according to the MSE criterion, is to first apply the matched filter to received signal $\mathcal{R}$. This first filtering process does not loose any information on the received signal and generates a $2N_u \times 1$ signal vector $\mathbf{z}$ defined as:

$$\mathbf{z} = \mathcal{C}^T \mathcal{H}^H \mathcal{R} \tag{6}$$

We then apply the MSE criterion to vector $\mathbf{z}$ and obtain the two detected data symbol $\hat{x}^0_{j,\text{opt}}$ and $\hat{x}^1_{j,\text{opt}}$ for user j given by:

$$\left[\hat{x}^0_{j,\text{opt}},\ \hat{x}^1_{j,\text{opt}}\right]^T = \mathcal{W}^H_{j,\text{opt}}\mathbf{z} = \mathcal{W}^H_{j,\text{opt}}\mathcal{C}^T\mathcal{H}^H\mathcal{R} \tag{7}$$

with

$$\begin{aligned}\mathcal{W}^H_{j,\text{opt}} = E_s\left(\mathbf{I}_2 \otimes \mathbf{c}_j^T\right)\mathcal{H}^H\mathcal{H}\mathcal{C}\big(\mathcal{C}^T\mathcal{H}^H\mathcal{H}\mathcal{C}\Gamma_{\mathcal{X},\mathcal{X}}\mathcal{C}^T\mathcal{H}^H\mathcal{H}\mathcal{C} \\ + \mathcal{C}^T\mathcal{H}^H\Gamma_{\mathcal{N},\mathcal{N}}\mathcal{H}\mathcal{C}\big)^{-1}\end{aligned} \tag{8}$$

Equations (5) and (8) achieve exactly the same performance, but applying Equation (8) only implies to solve a $2N_u \times 2N_u$ linear system. In other words, this alternative solution, which needs to invert a $2N_u \times 2N_u$ matrix instead of $2L_c \times 2L_c$, has a lower complexity for any but full system load. Anyways, for large number N_u of users, the matrix inversion may be an expensive and time consuming operation. A well-known alternative solution is to use an iterative procedure based on popular algorithms such as least-mean-square or recursive-least square.

4. SIMULATION RESULTS OVER RAYLEIGH FADING CHANNEL

For these results, frequency non-selective Rayleigh fading per subcarrier and time invariance during two MCCDMA symbols are assumed to permit the recombination of symbols when STBC is used. Based on these assumptions and considering ideal time and frequency interleaving, the complex channel fading coefficients perfectly estimated are considered uncorrelated for each subcarrier k and mutually independent from each transmit antenna to each receive antenna. With these uncorrelation and independence hypothesis, the asymptotic performance of the studied algorithms can be obtained.

Simulation results are carried out without channel coding to evaluate MMSE MD and MMSE SD performance in the MIMO and MISO cases. The length of the spreading codes $(L_c = 16)$ is equal to the number of subcarriers N_c. Results are first compared in terms of BER performance versus E_b/N_0. The different subcarriers are supposed to be multiplied by independent non-selective Rayleigh fading perfectly estimated. It is assumed that all the users' signals are received with the same mean power. We do not take into account the power gain provided by the use of multiple transmit and receive antennas, i.e. only the spatial diversity gain is taken into account. The matched filter (MF) bound is given as reference as well as the performance of the MCCDMA system combined with MMSE SD or GMMSE in the SISO case. The MF bound for an uncoded system corresponds to the BER obtained with MRC detection without multiple access interference.

4.1. Full load system

Figure 2 shows the performance of MMSE MD and MMSE SD with and without transmit and receive diversity, with full-load systems for $L_c = N_c = N_u = 16$. As expected, the performance of MC-CDMA is highly improved when combined with STBC in order to exploit the transmit diversity and when multiple receive antennas are used in order to take benefit of receive diversity. Moreover, in the MISO case $(N_t N_r = 21)$, the performance of 21 MMSE MD and 21 MMSE SD are the same because the

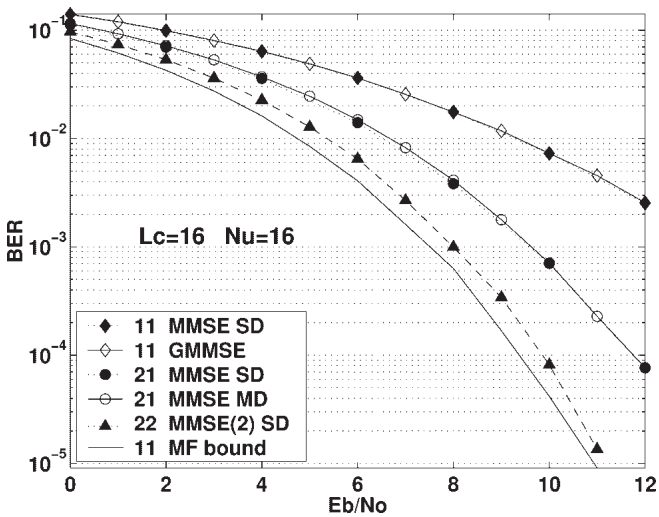

Figure 2. Performance of MMSE MD and SD over Rayleigh fading channels for SISO $(N_t N_r = 11)$, MISO $(N_t N_r = 21)$ and MIMO $(N_t N_r = 22)$ systems with $N_c = L_c = 16$. $N_u = 16$ (full load).

equalisation coefficient matrix $\mathbf{G}_{tr}$ is a diagonal matrix with the kth subcarrier equalisation coefficient equal to the coefficient obtained for MMSE SD. Besides, 22 MMSE SD system $(N_t N_r)$ is the best scheme and offers a very good performance/complexity trade-off.

4.2. Half load system

The performance of MMSE MD and MMSE SD with and without transmit and receive diversity, with half-load systems for $L_c = N_c = 16$ and $N_u = 8$ are presented in Figure 3. With two transmit antennas and one receive antenna, 21 MMSE MD achieves a gain of roughly 1 dB compared to 21 MMSE SD at high SNR. Again, 22 MMSE SD system is the best scheme even if the gain compared to other systems is lower than in the full load case.

4.3. Performance versus system load

Finally, in Figure 4, the performance of sub-optimal MMSE (1) and optimal MMSE (2) SD MIMO MC-CDMA are compared to MMSE MD MISO MC-CDMA and MMSE SD SISO MC-CDMA. The maximum number N_u of active users versus the required E_b/N_0 to achieve a $\mathrm{BER} = 10^{-}$ is given for $L_c = N_c = 16$ and equal mean power signals.

For non full load cases, the gain of MMSE MD compared to MMSE SD, which is roughly equal to 2 dB for SISO systems, decreases to less than 1 dB for MISO systems. Furthermore, the most important result is that, for

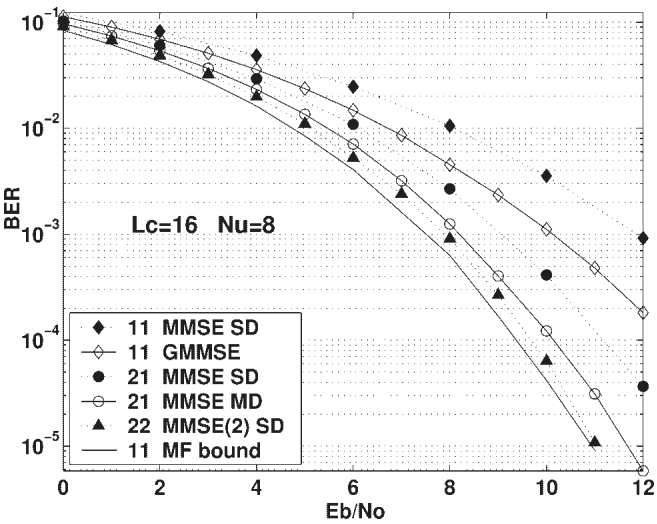

Figure 3. Performance of MMSE MD and SD over Rayleigh fading channels for SISO $(N_t N_r = 11)$, MISO $(N_t N_r = 21)$ and MIMO $(N_t N_r = 22)$ systems with $N_c = L_c = 16$. $N_u = 8$ (half load).

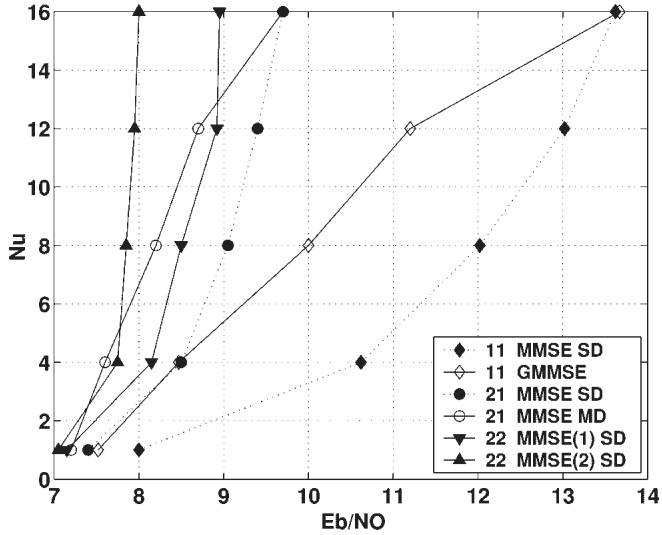

Figure 4. Number N_u of active users versus the required E_b/N_0 to achieve a $\mathrm{BER} = 10^{-3}$ with MMSE MD and SD over Rayleigh fading channels for SISO $(N_t N_r = 11)$, MISO $(N_t N_r = 21)$ and MIMO $(N_t N_r = 22)$ systems; $N_c = L_c = 16$.

any load, the low complex and new 22 MMSE (2) SD MIMO scheme outperforms all studied MD, SD, MISO and SISO systems. Furthermore, the spatial diversity gain is all the more significant when the number of active users N_u is high. Finally, similar results to those depicted in Figures 2, 3 and 4 have been obtained over Rayleigh fading channel with $N_c = L_c = 64$ and various number N_u of active users and leads to the same conclusions concerning the relative performances of the differents algortihms.

5. SIMULATION RESULTS OVER METRA CHANNEL

A major characteristic of the stochastic MIMO channel model developed within the European Union IST research METRA project is that, contrary to other directional models, it does not rely on a geometrical description of the environment under study [8]. It is a complex single input single output (SISO) finite impulse response (FIR) filter whose taps are computed so as to simulate time dispersion, fading and spatial correlation. To simulate MIMO radio channels, it has to be inserted between a parallel-to-serial and serial-to-parallel converters. Besides, the correlation properties in the spatial domain of the MIMO radio channel are obtained by the Kronecker product of two independent correlation matrices defining the correlation properties at the base station (BS) and mobile station (MS).

Table 2 summarises the main system and channel parameters. To adapt the parameters to the channel, the number N_c of subcarriers is equal to 64 and the length L_c of the code is also equal to 64. In the correlated MISO and MIMO cases, we consider in the BS and MS an array of two uniformly spaced antennas with an inter-element separation fixed to 1.5λ and 0.4λ respectively which corresponds to 8.6 and 2.3 cm at 5.2 GHz. Then, the envelope correlation coefficients between antennas are:

$$R_{BS} = \begin{bmatrix} 1 & 0.265 \\ 0.265 & 1 \end{bmatrix} \quad R_{MS} = \begin{bmatrix} 1 & 0.294 \\ 0.294 & 1 \end{bmatrix}$$

which have been derived from 4×4 correlation matrices obtained through experimental measurements in real indoor scenario [8]. The considered velocity of the terminal is equal to 3.6 km/h which corresponds to a maximum Doppler frequency equal to 17.3 Hz. In that case, the channel response can be considered as invariant over two consecutive MC-CDMA symbols.

Figures 5 and 6 represent respectively for half load systems $L_c = N_c = 64$ and $N_u = 32$) and full load systems $L_c = N_c = 64$ and $N_u = 64$), in indoor environment the performance of MMSE MD and SD with and without transmit and receive diversity. The loss due to the guard interval is taken into account. The $N_t \times N_r$ subchannels are perfectly estimated. For half load systems, MMSE MD offers in the SISO case $(N_t N_r = 11)$, as over Rayleigh channel, a gain of nearly 2 dB (for a BER $= 10^{-3}$) compared to MMSE SD. In the MISO $(N_t N_r = 21)$ and MIMO $(N_t N_r = 22)$ cases, the good performance of the 21 MMSE SD and especially 22 MMSE (2) SD measured over the Rayleigh channel are confirmed when channels are perfectly decorrelated. Moreover, in the realistic case corresponding to correlated channels with a 1.5λ and 0.4λ separation between the two transmit and receive antennas respectively, the performance loss compared to the perfectly decorrelated case is less than 0.5 dB for a BER $= 10^{-3}$.

Table 2. Main system and MIMO channel parameters.

OFDM symbol duration (µs)	3.2
Number N_c of subcarriers	64
Guard interval (µs)	0.5
Length L_c of the spreading codes	64
Center frequency (GHz)	5.2
Signal bandwidth (MHz)	20
Channel profile	BRAN A
Velocity (km/h)	3.6
Doppler spectrum	Jakes
Max. Doppler frequency (Hz)	17.3
Measured coherence bandwidth (MHz)	5.8
Pattern	Omni.
Doppler oversampling factor	2
DoA azimuth (deg)	0
Elevation angle (deg)	90

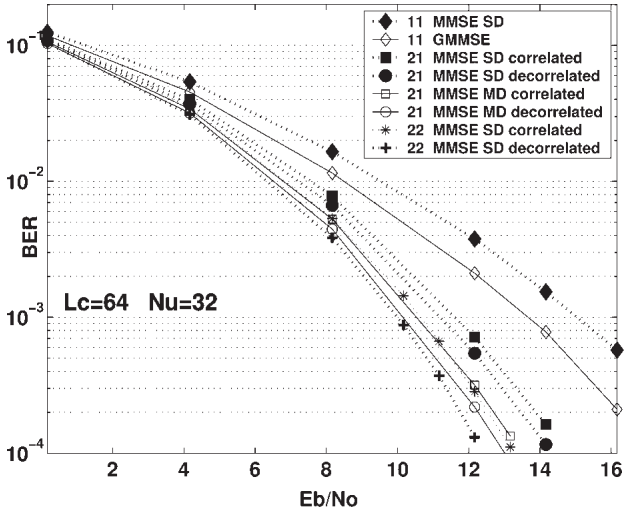

Figure 5. Performance of half load MMSE MD and SD over METRA channels for SISO $(N_t N_r = 11)$, MISO $(N_t N_r = 21)$ and MIMO $(N_t N_r = 22)$ systems with $N_c = L_c = 64$; $N_u = 32$.

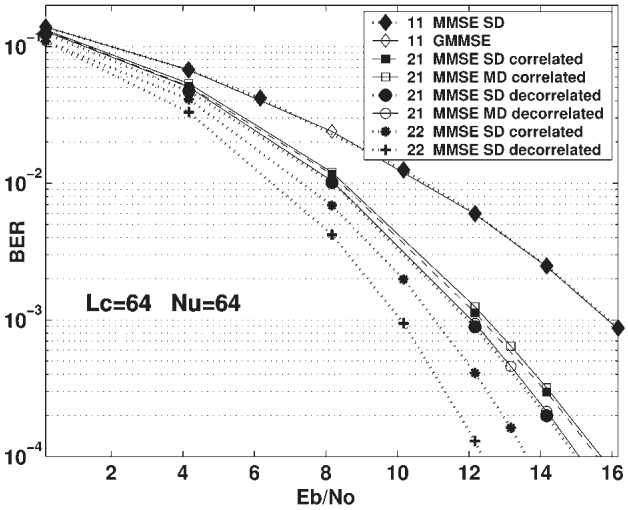

Figure 6. Performance of full load MMSE MD and SD over METRA channels for SISO $(N_t N_r = 11)$, MISO $(N_t N_r = 21)$ and MIMO $(N_t N_r = 22)$ systems with $N_c = L_c = 64$; $N_u = 64$.

For full load systems, MMSE MD offers the same performance as MMSE SD in the SISO and MISO cases, over correlated and decorrelated channels. As for half load systems, performance loss due to the correlation is inferior to 0.5 dB for a BER $= 10^{-3}$. These different results demonstrate that in indoor scenarios, characterised by limited frequency and time diversities, exploiting spatial diversity improves significantly the performance. Then, STBC

MC-CDMA schemes take full benefits from the frequency and spatial diversities.

6. CONCLUSION

The performance of MMSE SD and MD MIMO MC-CDMA systems are analysed and first compared over Rayleigh fading channels in the case of two transmit antennas and one or two receive antennas. With two transmit antennas and one receive antenna, MD outperforms SD for non-full load systems while the same performance are obtained for full load systems. Besides, with two receive antennas, STBC MC-CDMA with MMSE single-user detection offers a very good performance. Finally, over the realistic METRA MIMO channel, the very good behaviour of this MMSE detection is confirmed even in the case of correlated channels.

ACKNOWLEDGEMENT

The work presented in this paper was supported by the European FP5 IST project MATRICE (MC-CDMA transmission techniques for integrated broadband cellular systems) and by France Telecom R&D/DMR/DDH within the contract 424 62 728.

REFERENCES

1. Hara S, Prasad R. Overview of multicarrier CDMA. *IEEE Communications Magazine* 1997; **35**(12):126–133.
2. Tarokh V, Seshadri N, Calderbank A. Space-time codes for high data rate wireless communication: performance criterion and code construction. *IEEE Transactions on Information Theory* 1998; **44**(2): 744–765.
3. Alamouti S. A simple transmit diversity technique for wireless communications. *IEEE Journal on Selected Area in Communications* 1998; **16**(8):1451–1458.
4. Tarokh V, Jafarkhani H, Calderbank A. Space-time block codes from orthogonal designs. *IEEE Transactions on Information Theory* 1999; **45**(5):1456–1467.
5. Le Nir V, Auffray J-M, Hélard M , Hélard J-F, Le Gouable R. Combination of Space-Time Block Coding with MC-CDMA Technique for MIMO Systems with Two, Three and Four Transmit Antennas. In *IST Mobile & Wireless Communication Summit*, Aveiro, Portugal, June 2003.
6. Kaiser S. Multi-carrier CDMA Mobile Radio Systems—Analysis and Optimization of Detection, Decoding and Channel Estimation, Ph.D. dissertation, German Aerospace Center, 1998, VDI Verlag GmbH, Düsseldorf.
7. Baudais J-Y, Hélard J-F, Citerne J. An improved linear MMSE detection technique for multi-carrier CDMA system: Comparison and combination with interference cancelation schemes. *European Transactions on Communications* 2000; **11**(7): 547–554.
8. Pedersen K, Andersen J, Kermoal J, Mogensen P. A Stochastic Multiple Input Multiple Output Radio Channel Model for Evalation of Space-Time Coding Algorithms. In *IEEE Vehicular Technology Conference*, September 2000.

AUTHORS' BIOGRAPHIES

Jean-Michel Auffray was born in France in 1976. He received M.Sc. degree in signal processing from Rennes University, France, in 1999. Since November 2000, he has been working towards the Ph.D. in electrical engineering in the Rennes Institute for Electronics and Telecommunications (IETR). His doctoral research topic deals with space-time coding, multiuser and multicarrier transmission over wireless channel.

Jean-Yves Baudais received the M.Sc. degree, and PhD in electrical engineering from the National Institute of Applied Sciences of Rennes (INSA), France, in 1997 and 2001 respectively. Since 2002, he has been working as CNRS researcher (French National Centre for Scientific Research) in the Rennes Institute for Electronics and Telecommunications (IETR) laboratory. Dr. Baudais was involved in several European and national research projects in the fields of mobile radio communications and power line transmissions. His general interests lie in the areas of signal processing and digital communications. Current research focuses on transmitter and receiver diversity techniques for multiuser and multicarrier communication including space-time coding.

Jean-François Hélard received his Dipl.-Ing. from the National Institute of Applied Sciences (INSA) of Rennes, France, in 1981. From 1982 to 1997, he was research engineer and then head of the channel coding for digital broadcasting research group at the CCETT (France Telecom Research Center) in Rennes, where he worked successively on Digital Audio Broadcasting within EUREKA 147 DAB and Terrestrial Digital Video Broadcasting (DVB-T) within the framework of the European project dTTb. In 1992, he received the Ph.D. in electronics and joined INSA in 1997, where he is currently a professor and head of the group 'Communications, Propagation and Radars' of the Rennes Institute for Electronics and Telecommunications (IETR) which depends on the French National Centre for Scientific Research (CNRS). His present research interests lie in signal processing techniques for digital communications, as space-time and channel coding, multicarrier modulation, spread spectrum and multi-user communications. He is author or co-author of more than 50 technical papers in international scientific journals and conferences, holds 11 European patents.