HAL open science

Optimization of Pyramidal Horn Antennas Directivity Using the Fresnel Integral

Omar Tekkouk, Ahcene Boualleg, Malek Benslama

To cite this version:

Omar Tekkouk, Ahcene Boualleg, Malek Benslama. Optimization of Pyramidal Horn Antennas Directivity Using the Fresnel Integral. 2008. hal-00235445

HAL Id: hal-00235445

https://hal.science/hal-00235445v1

Preprint submitted on 4 Feb 2008

HAL is a multi-disciplinary open access archive for the deposit and dissemination of scientific research documents, whether they are published or not. The documents may come from teaching and research institutions in France or abroad, or from public or private research centers.

L'archive ouverte pluridisciplinaire **HAL**, est destinée au dépôt et à la diffusion de documents scientifiques de niveau recherche, publiés ou non, émanant des établissements d'enseignement et de recherche français ou étrangers, des laboratoires publics ou privés.

Optimization of Pyramidal Horn Antennas Directivity Using the Fresnel Integral

O.TEKKOUK, A.BOUALLEG, M.BENSLAMA
Laboratory of Electromagnetism and Telecommunications (LET)
University of Constantine (ALGERIA)

Abstract

Antennas are devices used to transmit and receive electromagnetic energy to and from free space. The electric and magnetic fields around antennas vary based on the location of the field point and the excitation impressed upon the antenna terminals. There are two major types of antennas widely used in radar and communication systems: linear wire antenna, center-fed by a transmission line, and electromagnetic horn antenna fed by a waveguide. In this paper, we present the radiation patterns of pyramidal horn and calculating the optimum values that maximize the horn directivity. These pyramidal horns are widely used as feeds for reflector antennas.

Keywords: - horn antennas directivity, horn radiation patterns, pyramidal horn antenna, radiation fields

I. Introduction

The only practical way to increase the directivity of a waveguide is to flare out its ends into a horn. There are three types of horns: The H-plane sectoral horn in which the long side of the waveguide (the a-side) is flared, the E-plane sectoral horn in which the short side is flared, and the pyramidal horn in which both sides are flared.

The pyramidal horn is the most widely used antenna for feeding large microwave dish antennas and for calibrating them [1] [2]. The sectoral horns may be considered as special limits of the pyramidal horn. In this paper, we will discuss only the pyramidal case.

II. Analysis

The configuration to be analysed is shown in Fig.1.The two lower figures are the cross sectional views along the xz- and yz-plane.

In this figure the length Δ_a represent the maximum deviation of the radial distance at the edge of the horn plane, that is, at $x = \pm A/2$. For any other distance x along the A-side of the horn, and distance y along the B-side, the deviations will be:

$$\Delta_a(x)=\frac{x^2}{2R_a},\Delta_b(y)=\frac{y^2}{2R_b} \tag{1}$$

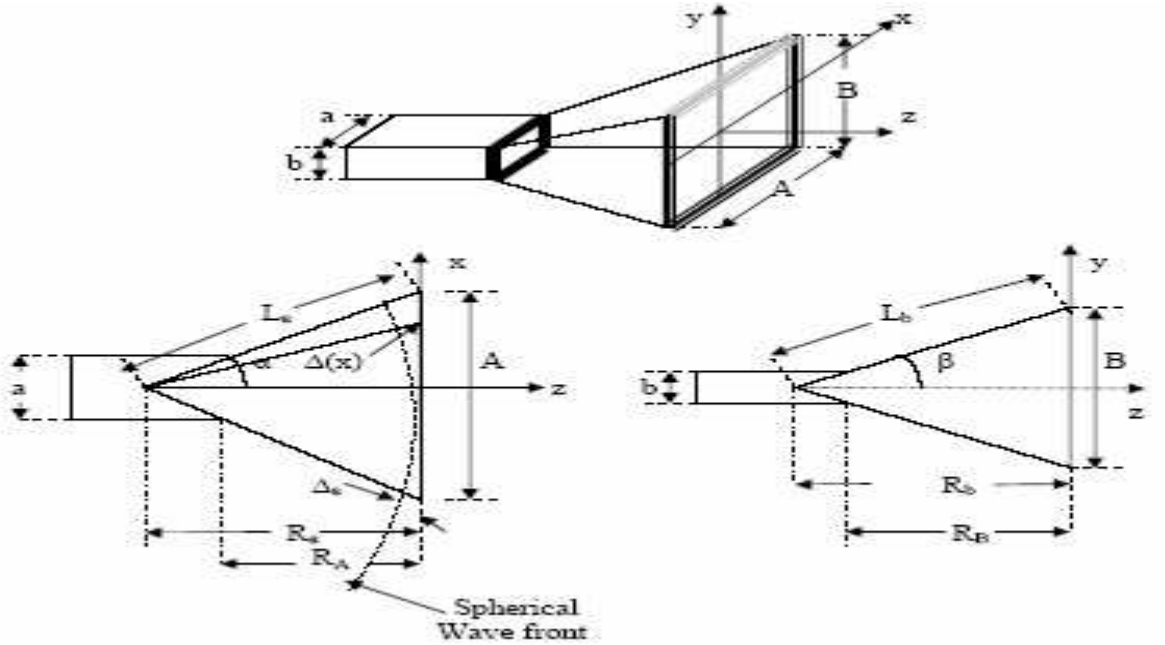

Fig.1 The geometry of the pyramidal horn requires $R_A = R_B$

The quantities $k\Delta_a(x)$ and $k\Delta_b(y)$ are the relative phase differences at the point (x, y) on the aperture of the horn relative to the center of the aperture. To account for these phase differences, the aperture electric field is assumed to have the form: [3]

$$E_y(x,y)=E_0\cos\left(\frac{\pi x}{A}\right)e^{-jk\Delta_a(x)}e^{-jk\Delta_b(y)}\text{,or,} \tag{2}$$

$$E_y(x,y)=E_0\cos\left(\frac{\pi x}{A}\right)e^{-jkx^2/2R_a}e^{-jky^2/2R_b} \tag{3}$$

We note that at the connecting end of the waveguide the electric field is $E_y(x,y)=E_0\cos(\pi x/a)$ and changes gradually into the form of (3) at the horn end.

Because the aperture sides A, B are assumed to be large compared to λ, the Huygens source assumption is fairly accurate for the tangential aperture magnetic field, $H_x(x,y)=-E_y(x,y)/\eta$, so that:

$$H_x(x,y)=-\frac{1}{\eta}E_0\cos\left(\frac{\pi x}{A}\right)e^{-jkx^2/2R_a}e^{-jky^2/2R_b} \tag{4}$$

The quantities $k\Delta_a, k\Delta_b$ are the maximum phase deviations in radians. Therefore, Δ_a/λ and Δ_b/λ will be the maximum deviations in cycles. We define by [4]

$$S_a = \frac{\Delta_a}{\lambda} = \frac{A^2}{8\lambda R_a}, S_b = \frac{\Delta_b}{\lambda} = \frac{B^2}{8\lambda R_b} \tag{5}$$

It turns out that the optimum values of these parameters that result into the highest directivity are approximately: $S_a = 3/8, S_b = 1/4$. We will use these values later in the design of optimum horns. For deriving convenient expressions for the radiation patterns of the horn, we define the related quantities

$$\sigma_a^2 = 4S_a = \frac{A^2}{2\lambda R_a}, \sigma_b^2 = 4S_b = \frac{B^2}{2\lambda R_b} \tag{6}$$

The near-optimum values of these constants are:

$\sigma_a = \sqrt{4S_a} = \sqrt{4(3/8)} = 1.2247$ and $\sigma_b = \sqrt{4S_b} = \sqrt{4(1/4)} = 1$. These are used very widely, but they are not quite the true optimum values.

Replacing $k = 2\pi/\lambda$, $2\lambda R_a = A^2/\sigma_a^2$ and $2\lambda R_b = B^2/\sigma_b^2$ in (3), we may rewrite the aperture fields on the following form taking account that : $-A/2 \le x \le A/2$ and $-B/2 \le y \le B/2$:

$$E_y(x,y) = E_0 \cos\left(\frac{\pi x}{A}\right) e^{-j\left(\frac{\pi}{2}\right)\sigma_a^2\left(\frac{2x}{A}\right)^2} e^{-j\left(\frac{\pi}{2}\right)\sigma_b^2\left(\frac{2y}{B}\right)^2}$$

$$H_x(x,y) = -\frac{1}{\eta} E_0 \cos\left(\frac{\pi x}{A}\right) e^{-j\left(\frac{\pi}{2}\right)\sigma_a^2\left(\frac{2x}{A}\right)^2} e^{-j\left(\frac{\pi}{2}\right)\sigma_b^2\left(\frac{2y}{B}\right)^2} \tag{7}$$

III. Horn Radiation Fields

The radiation fields at some large distance r in the direction defined by the polar angles θ, ϕ are obtained from [5] [6] [3]:

$$\begin{aligned} E_\theta &= j\frac{ke^{-jk}}{2\pi}\left(\frac{1+\cos\theta}{2}\right) f_y(\theta,\phi)\sin\phi \\ E_\phi &= j\frac{ke^{-jk}r}{2\pi r}\left(\frac{1+\cos\theta}{2}\right) f_y(\theta,\phi)\cos\phi \end{aligned} \tag{8}$$

Where :

$$f_y(\theta,\phi) = \int_{-\frac{A}{2}}^{\frac{A}{2}}\int_{-\frac{B}{2}}^{\frac{B}{2}} E_y(x,y) e^{j(K_x x + k_y y)} dxdy = E_0 \int_{-\frac{A}{2}}^{\frac{A}{2}} \cos\left(\frac{\pi x}{A}\right) e^{jk_x x} e^{-j\left(\frac{\pi}{2}\right)\sigma_a^2\left(\frac{2x}{A}\right)^2} dx \int_{-\frac{B}{2}}^{\frac{B}{2}} e^{jk_y y} e^{-j\left(\frac{\pi}{2}\right)\sigma_b^2\left(\frac{2y}{B}\right)^2} dy \tag{9}$$

In calculating the radiation fields of pyramidal horns, it is desired to calculate a Fresnel diffraction integral of the type:

$$F_0(v,\sigma)=\int_{-1}^{1} e^{j\pi v\xi} e^{-j(\pi/2)\sigma^2\xi^2}\, d\zeta$$
$$F_1(v,\sigma)=\int_{-1}^{1} \cos\left(\frac{\pi\xi}{2}\right) e^{j\pi v\xi} e^{-j(\pi/2)\sigma^2\xi^2}\, d\zeta \tag{10}$$

The function $F_0(v,\sigma)$ can be expressed as:

$$F_0(v,\sigma)=\frac{1}{\sigma}e^{j(\pi/2)(v^2/\sigma^2)}\left[F\left(\frac{v}{\sigma}+\sigma\right)-F\left(\frac{v}{\sigma}-\sigma\right)\right] \tag{11}$$

Where $F(x)=c(x)-jS(x)$ is the standard Fresnel integral. Then, the function $F_1(v,\sigma)$ can be expressed in terms of $F_0(v,\sigma)$:

$$F_1(v,\sigma)=\frac{1}{2}\left[F_0(v+0.5,\sigma)+F_0(v-0.5,\sigma)\right] \tag{12}$$

Next, we express the radiation patterns in terms of (10). Defining the normalized wave numbers: $v_x = k_x A/2\pi$ and $v_y = k_y B/2\pi$, we have:

$$v_x = \frac{A}{\lambda}\sin\theta\cos\phi,\ v_y = \frac{B}{\lambda}\sin\theta\sin\phi \tag{13}$$

Changing variables to $\zeta = 2y/B$, the y-integral can written in terms of $F_0(v,\sigma)$:

$$\int_{-\frac{B}{2}}^{\frac{B}{2}} e^{jk_y y} e^{-j\left(\frac{\pi}{2}\right)\sigma_b^2\left(\frac{2y}{B}\right)^2} dy = \frac{B}{2}\int_{-1}^{1} e^{j\pi v_y\xi} e^{-j\left(\frac{\pi}{2}\right)\sigma_b^2\xi^2} d\xi = \frac{B}{2}F_0\left(v_y,\sigma_b\right)$$

Similarly, changing variables to $\zeta = 2x/A$, we find for the x-integral:

$$\int_{-\frac{A}{2}}^{\frac{A}{2}} \cos\left(\frac{\pi x}{A}\right) e^{jk_x x} e^{-j\left(\frac{\pi}{2}\right)\sigma_a^2\left(\frac{2x}{A}\right)^2} dx = \frac{A}{2}\int_{-1}^{1} \cos\left(\frac{\pi\xi}{2}\right) e^{j\pi v_x\xi} e^{-j\left(\frac{\pi}{2}\right)\sigma_a^2\xi^2} d\xi = \frac{A}{2}F_1\left(v_x,\sigma_a\right)$$

It follows that the Fourier transform $f_y(\theta,\phi)$ will be:

$$f_y(\theta,\phi)=E_0\frac{AB}{4}F_1\left(v_x,\sigma_a\right)F_0\left(v_y,\sigma_b\right) \tag{14}$$

The open-ended waveguide and the sectoral horns can be thought of as limiting cases of (14), as follows:

- Open-endedwaveguide: $\sigma_a=0, A=a, \sigma_b=0, B=b$
- H-plane sectoral horn: $\sigma_a \succ 0, A \succ a, \sigma_b=0, B=b$
- E-plane sectoral horn: $\sigma_a=0, A=a, \sigma_b \succ 0, B \succ b$

In these cases, the F-factors with $\sigma = 0$ can be replaced by the following simplified forms:

$$F_0\left(v_y,0\right)=2\frac{\sin\left(\pi v_y\right)}{\pi v_y}$$
$$F_1\left(v_x,0\right)=\frac{4}{\pi}\frac{\cos\left(\pi v_x\right)}{1-4v_x^2} \tag{15}$$

The far fields can be now calculated

$$E_\theta=j\frac{e^{-jkr}}{\lambda r}E_0\frac{AB}{4}\left(\frac{1+\cos\theta}{2}\right)\sin\phi F_1\left(v_x,\sigma_a\right)F_0\left(v_y,\sigma_b\right)$$
$$E_\phi=j\frac{e^{-jkr}}{\lambda r}E_0\frac{AB}{4}\left(\frac{1+\cos\theta}{2}\right)\cos\phi F_1\left(v_x,\sigma_a\right)F_0\left(v_y,\sigma_b\right) \tag{16}$$

IV. Horn Radiation Patterns

The radiation intensity is

$U\left(\theta,\phi\right)=r^2\left(\left|E_\theta\right|^2+\left|E_\phi\right|^2\right)/2\eta$, so that:

$$U\left(\theta,\phi\right)=\frac{1}{32\eta\lambda^2}\left|E_0\right|^2\left(AB\right)^2\left(\frac{1+\cos\theta}{2}\right)^2\left|F_1\left(v_x,\sigma_a\right)F_0\left(v_y,\sigma_b\right)\right|^2 \tag{17}$$

Assuming that the maximum intensity is towards the forward direction, that is, at $v_x=v_y=0$, we have:

$$U_{\max}\left(\theta,\phi\right)=\frac{1}{32\eta\lambda^2}\left|E_0\right|^2\left(AB\right)^2\left|F_1\left(0,\sigma_a\right)F_0\left(0,\sigma_b\right)\right|^2 \tag{18}$$

The direction of maximum gain is not necessarily in the forward direction, but it may be nearby. This happens typically when $\sigma_b \succ 1.54$. Most designs use the optimum value $\sigma_b=1$, which does have a maximum in the forward direction. With these caveats in mind, we define the normalized gain:

$$g\left(\theta,\phi\right)=\frac{U\left(\theta,\phi\right)}{U_{\max}\left(\theta,\phi\right)}=\left|\left(\frac{1+\cos\theta}{2}\right)\right|^2\left|\frac{F_1\left(v_x,\sigma_a\right)F_0\left(v_y,\sigma_b\right)}{F_1\left(0,\sigma_a\right)F_0\left(0,\sigma_b\right)}\right| \tag{19}$$

Similarly, the H- and E-plane gains corresponding to $\phi=0^0$ and $\phi=90^0$ are:

$$g_H\left(\theta\right)=\left|\left(\frac{1+\cos\theta}{2}\right)\right|^2\left|\frac{F_1\left(v_x,\sigma_a\right)}{F_1\left(0,\sigma_a\right)}\right|^2=g\left(\theta,0^\circ\right),v_x=\frac{A}{\lambda}\sin\theta$$
$$g_E\left(\theta\right)=\left|\left(\frac{1+\cos\theta}{2}\right)\right|^2\left|\frac{F_0\left(v_y,\sigma_b\right)}{F_0\left(0,\sigma_b\right)}\right|^2=g\left(\theta,90^\circ\right),v_y=\frac{B}{\lambda}\sin\theta \tag{20}$$

The normalizing values $F_1\left(0,\sigma_a\right)$ and $F_0\left(0,\sigma_b\right)$ are obtained from:

$$\left|F_1(0,\sigma_a)\right|^2 = \frac{1}{\sigma_a^2} \cdot \left|F\left(\frac{1}{2\sigma_a}+\sigma_a\right) - F\left(\frac{1}{2\sigma_a}-\sigma_a\right)\right|^2 \tag{21}$$

$$\left|F_0(0,\sigma_b)\right|^2 = 4\left|\frac{F(\sigma_b)}{\sigma_b}\right|^2$$

These have the limiting values for $\sigma_a = 0$ and $\sigma_b = 0$:

$$\left|F_1(0,0)\right|^2 = \frac{16}{\pi^2}, \left|F_0(0,0)\right|^2 = 4 \tag{22}$$

The mainlobe/sidelobe characteristics of the gain functions $g_H(\theta)$ and $g_E(\theta)$ depend essentially on the two functions:

$$f_1(v_x,\sigma_a) = \left|\frac{F_1(v_x,\sigma_a)}{F_1(0,\sigma_a)}\right| \tag{23}$$

$$f_0(v_y,\sigma_b) = \left|\frac{F_0(v_y,\sigma_b)}{F_0(0,\sigma_b)}\right|$$

V. Numerical Results and Discussion

Fig.2 shows these functions for the following values of the σ-parameters [7] [8] [3]:

$\sigma_a = [0, 1.2593, 1.37, 1.4749, 1.54]$ and $\sigma_b = [0, 0.7375, 1.0246, 1.37, 1.54]$

The values σ_a =1.2593 and σ_b =1.0246 are the optimum values that maximize the horn directivity (they are close to the commonly used values of σ_a =1.2247 and $\sigma_b = 1$).

The values σ_a =1.4749 and $\sigma_b = \sigma_a/2 = 0.7375$ are the optimum values that achieve the highest directivity for a waveguide and horn that have the same aspect ratio of $b/a = B/A = 1/2$.

For $\sigma_a = \sigma_b = 0$, the functions reduce to the sinc and double-sinc functions of (15). The value σ_b =1.37 was chosen because the function $f_0(v_y,\sigma_b)$ develops a plateau at the 3-dB level, making the definition of the 3-dB width ambiguous.

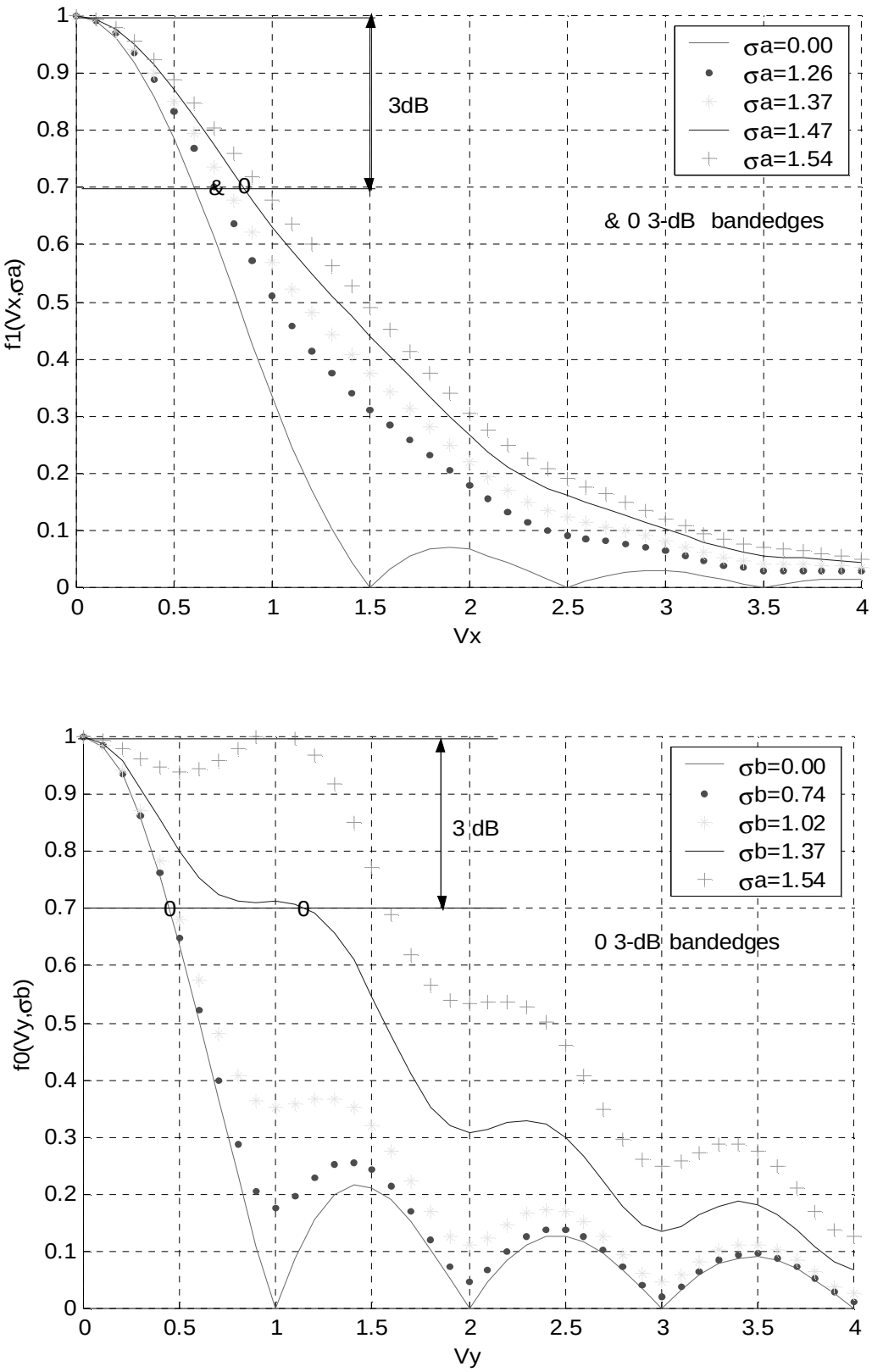

Fig. 2 Gain functions for different σ -parameters

The value σ_b =1.54 was chosen because $f_0\left(v_y, \sigma_b\right)$ exhibits a secondary maximum away from

$v_y = 0$. This maximum becomes stronger as σ_b is increased further.

For the optimum values $\sigma_a = 1.2593$ and $\sigma_b = 1.0246$, the main lobes become wider as σ_a and σ_b increase. The 3-dB band edges corresponding to the optimum σ are found from $v_a = 0.6928$ and $v_b = 0.4737$, and are shown on the graphs.

The 3-dB width in angle θ can be determined from $v_x = (A/\lambda)\sin\theta$, which gives approximately $\Delta\theta_a = (2v_a)(\lambda/A)$, the approximation being good for $A \succ 2\lambda$ Thus, in radians and in degrees; we obtain the H-plane and E-plane optimum 3-dB widths:

$$\begin{aligned} \Delta\theta_a &= 1.3856\frac{\lambda}{A} = 79.39^0\frac{\lambda}{A} \\ \Delta\theta_b &= 0.9474\frac{\lambda}{B} = 54.28^0\frac{\lambda}{B} \end{aligned} \tag{24}$$

The indicated angles must be replaced by 77.90°and 53.88° if the near optimum σ are used instead, that is, $\sigma_a = 1.2247$ and $\sigma_b = 1$.

Because of the 3-dB plateau of $f_0(v_y, \sigma_b)$ at or near $\sigma_b = 1.37$, the band edge defines to be in the middle of the plateau. At $\sigma_b = 1.37$, the computed band edge is $v_b = 0.9860$, and is shown in Fig. 2.

The 3-dB band edges for the parameters $\sigma_a = 1.4749$ and $\sigma_b = \sigma_a/2 = 0.7375$ corresponding to aspect ratio of 1/2 are $v_a = 0.8402$ (shown on the first graph) and $v_b = 0.4499$.

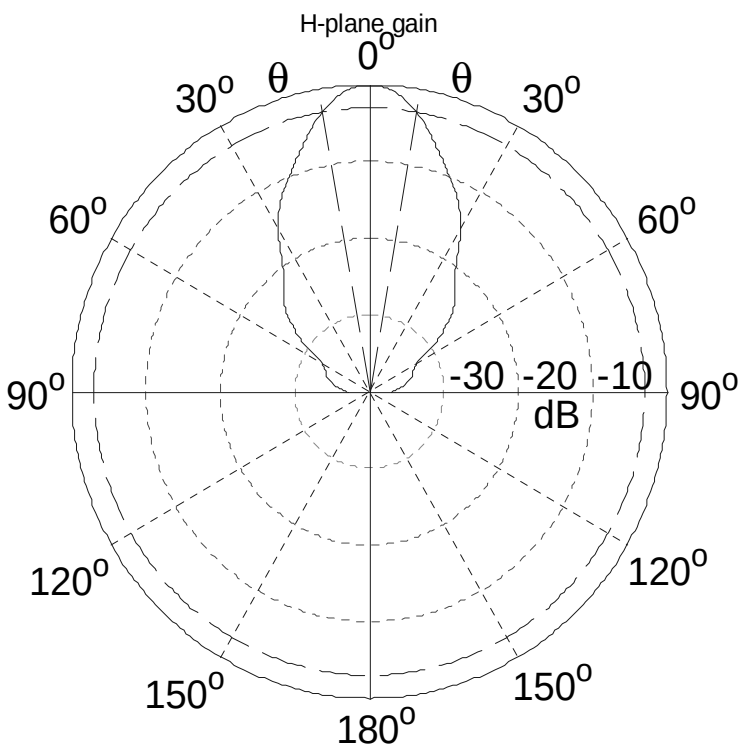

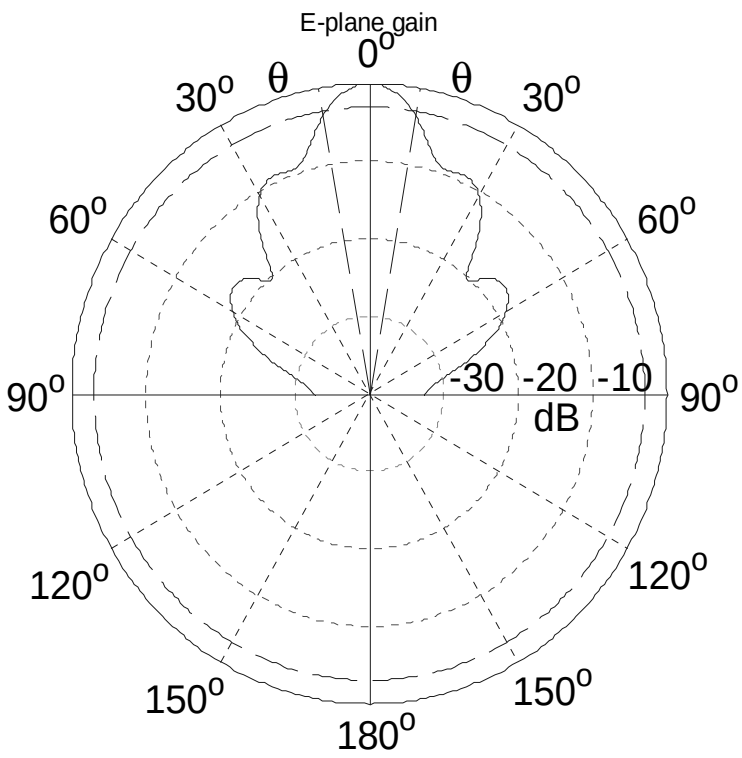

Fig.3 H- and E-plane gains for $A = 4\lambda$, $B = 3\lambda$, and $\sigma_a = 1.2593$, $\sigma_b = 1.0246$.

Fig. 3 shows the H- and E-plane gains of a pyramidal horn with sides $A = 4\lambda$ and $B = 3\lambda$ and for the optimum values of the σ-parameters. The 3-dB angle widths were computed from (24) to be:

$\Delta\theta_a = 19.85°$ and $\Delta\theta_b = 18.09°$

The graphs show also a 3-dB gain circle as it intersects the gain curves at the 3-dB angles, which are $\Delta\theta_a/2$ and $\Delta\theta_b/2$.

VI. Conclusion

In this paper, a study of the optimum of pyramidal horn antennas directivity is presented and developed by using the Fresnel Integral method.

The optimum values of the σ-parameters: found that maximize the horn directivity are close to the commonly used values. Moreover, one has to determine the optimum values that achieve the highest directivity for a waveguide and horn that have the same aspect ratio.

References

[1] A.D Olver., P.J.B Clarricoats., A.A Kishk., L. Shafai., "Microwave horns and feeds", *IEE Electromagnetics Waves Series 39*, ISBN 0 85296 809 4, 1994

[2] C. Granet, "Profile options for feed horn design", *Proceedings of the Asia Pacific Microwave Conference,* Vol. 1, pp. 1448-1452, 2000.

[3] S. J. Orfanidis "*Electromagnetic Waves and Antennas"* Rutgers University, 1997.

[4] J.D Hunter and I.G Morgan, "Near-Field Gain Correction for Transmission between Horn Antennas", *IEEE Trans. IM-26,* No.1, pp.58-61, March 1977.

[5] F.J.S Moreira, "*Design and regorous analysis of generalized Axially Symmetric dual Reflector Antennas*" Ph.D. Disseration, Univ. of Southern California, Loss Angles, Aug.1997

[6] F.J.S Moreira and A Prata, "Generalized Classical Axially Symmetric dual Reflector Antennas" *IEEE Trans. Antennas Propagat.*, vol.49, No.4, pp547-554, Apr.2001

[7] R.Coccioli., G.Pelosi., R.Ravanelli., "A mode matching-integral equation technique for the analysis and design of corrugated horns", *Aerospace Science and Technology*, No 2, pp. 121-128, 1998

[8] G. Fedi, S. Manetti S., G. Pelosi., S. Selleri., "Artificial neural network in horn design problems", *Millennium Antenna & Propagation Conference, Davos, Switzerland,* 4 pages on the AP2000-CD, April 2000.