HAL
open science

Proposal of a New Design Methodology in the Surgical Domain

Rahi Rasoulifar, Guillaume Thomann, Jean Caelen, François Villeneuve

To cite this version:

Rahi Rasoulifar, Guillaume Thomann, Jean Caelen, François Villeneuve. Proposal of a New Design Methodology in the Surgical Domain. ICED'07, International Conference On Engineering Design, Aug 2007, Paris, France. 12 p. hal-00184698

HAL Id: hal-00184698

https://hal.science/hal-00184698v1

Submitted on 31 Oct 2007

HAL is a multi-disciplinary open access archive for the deposit and dissemination of scientific research documents, whether they are published or not. The documents may come from teaching and research institutions in France or abroad, or from public or private research centers.

L'archive ouverte pluridisciplinaire **HAL**, est destinée au dépôt et à la diffusion de documents scientifiques de niveau recherche, publiés ou non, émanant des établissements d'enseignement et de recherche français ou étrangers, des laboratoires publics ou privés.

INTERNATIONAL CONFERENCE ON ENGINEERING DESIGN, ICED'07
28 - 31 AUGUST 2007, CITE DES SCIENCES ET DE L'INDUSTRIE, PARIS, FRANCE

PROPOSAL OF A NEW DESIGN METHODOLOGY IN THE SURGICAL DOMAIN

Rahi Rasoulifar[1], Guillaume Thomann[1], Jean Caelen[2] and François Villeneuve[1]
[1]G-SCOP Laboratory, Grenoble Institute of Technology
[2]LIG Laboratory, Grenoble Institute of Technology

ABSTRACT
Nowadays, surgical interventions are caring out more and more in Minimally Invasive Surgery (MIS) to make the post-operative constraints less painful for the patient. Traditionally, new surgical tools were designed after informal discussions between surgeons and designers despite of the existing difference between the surgeon's needs and the designer's proposition.
In this paper, firstly we try to propose an innovative process design method with a better integration of the user which allows the designer to design surgical tools more adapted to surgical procedure and more supporting for the surgeon's ideas. This proposition consists in a new idea on the integration of the Scenario Based Design Methodology and the confrontation of:

- Evolution of the surgical tool prototypes,
- Modification of surgical procedure.

This situation will be able to decrease the differences between the surgeons' needs and the designed tools and their usage. As you will see in the second part of this paper, we develop the application of the proposed Co-Evolutive Design Process methodology to the lumbar arthrodesis surgery, with the explanation of prototype and surgical procedure evolutions.

Keywords: Innovative Design Methodology, Co-evolutive Process Design, Scenario-Based Design, Minimally Invasive Surgery, New Surgical Instruments

1 INTRODUCTION
In all the production domains, we usually notice a difference between the user's idea and the designer's proposal product. This variable difference depends on the design process methodology used by the enterprise. In the surgical domain, this problem appears more seriously because of the large space between the proficiency of the user and the designer. More over, there is such a difficulty of medical terms routinely employed by the surgeon to explain his need, which causes to reduction of an instantaneous comprehension by designers. Knowing that the relation between surgeon and designer plays an important role in the design process, a little disturbance ends a dysfunction in the definition cycle of the product. The aim of this study is to modify the design process for better understandings and more complementarities between surgeons and designers.

In this paper, firstly we will present the notion of co-Evolutive design process which is a proposition of representation of the process design where the problem and the solution evolve parallel. Then, we explain that the complexity of the medical devices needs specific methodology to be well designed with taking into account a maximum of the users constrains. The next section of this paper deals with the proposition of a new co-Evolutive design process methodology where we show the progress of the surgical instrument prototype and the adapted surgical procedure. Finally, an example of application in real environment with surgeons is developed with the explanation of the applied method.

1.1 The Integrated and co-Evolutive Design Process
Design process as the term used in French studies "Conception" is supposed to be parallel (sharing of tasks between designers) and integrated [1]. In the studies of mechanical design process, integration of knowledge in the process is an important point of view for formalising the knowledge. There are some

theories and methodologies like General Design Theory ([2], [3] and [4]), and Abstract Design Theory [5] which described a design process model as knowledge operations where critical stages are one to find out design solutions that fulfil requirements and one to enrich the attributive and functional information about selected design solutions. On the other hand, they represent design information and knowledge to be handled by a designer. This means that we need theories and methodologies to capture, represent, model, and codify design knowledge and information.

Studies of how describing the evolution of problem and the solution in design process are needed to evaluate in real-world projects, provide direction for improving them, enhance our general understanding of what co-evolution contribute to design. Four main studies are reviewed below. In addition, the literature contains studies in which researchers apply their own integrated design approach to illustrate the viability and flow of knowledge [6] or to axiomatic design formulation [7]. The qualities of these additional researches unsaid, they cannot replace studies of real product.
Blanco explained the emergence of the product in the design process by a succession of conjectures and evaluations, which will take part in the joint development of the project and the solution (Figure 1-A) [8][9]. In [10], Brissaud et al. proposed a model of the design process intended to represent the zigzags followed by the reasoning of the originators during an experiment of design (Figure 1-B). According to this model, two distinct spaces cohabit, on the one hand the space of the problem and on the other hand the space of the solution. The originators pass alternatively from the one to the other by the means of conjectures proposing a contribution to the solution and of expressions of criteria applied (negatively or positively) to this conjecture and redefining the problem.
Dorst and Cross [11] described the creativity in the design process through the co-evolution of the problem and solution. In [12], the authors propose an explicitly qualified model of co-evolutif of the design process. Lonchampt defines the activities conducted by the designers at the time of the navigation in and between the two domains of problem and solution [13]: conjecture (C), Definition of the solution (D), Evaluation (E) and Representation of the problem (R). Both models are shown in Figure 1-C and 1-D.

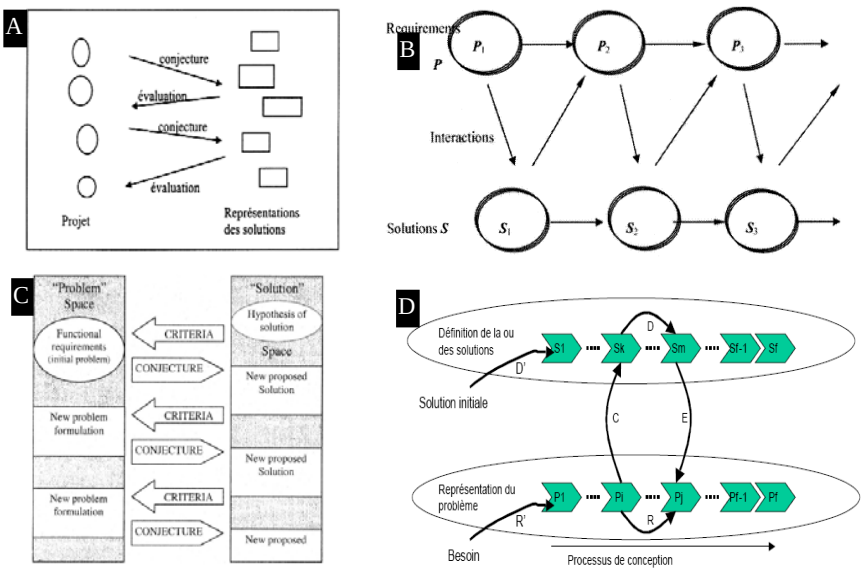

Figure 1. Recent co-Evolutive approaches of problem solving in process of integrated design. A) Joint development of the project and the solution; B) zigzags reasoning of the originators during an experiment of design; C) and D) activities conducted by the designers between the domains of problem and solution

Based on these views, we will try to give an approach on the co-Evolutive model of design process. Note that many papers intend to serve a conceptual framework for knowledge in design process; in the next part, we will present a new methodology for design process for surgical mechanical instrument design. This model could be considered on the one hand a representation of tool, and on the other hand of situation of use.

1.2 Needs and Innovations in Minimally Invasive Surgery

In the last section we presented some co-Evolutive models of design process based on the parallel evolution of problem and solution. After a little introduction about the Minimally Invasive Surgery (MIS), we will present in this part reflections about complexity of medical instruments design and some about the Scenario Based Design (SBD) which constitute another proposition for the better integration of the user in the Design Process.

1.2.1 Introduction to the MIS

Currently, the consequences are very handicapping after hard classical surgical interventions. Scientific progress of the last decades makes more and more possible to satisfy the needs for the surgeons in terms of surgical materials and more precisely of surgical tools. Thus, the MIS appeared in operating rooms in the years 1990. MIS has the main objectives to make the post-operative constraints less painful for the patient, mainly by modifying the operative process with the aim of introducing miniaturized or modified tools inside the human body.

1.2.2 Complexity of new medical instruments

Surgical instruments are tools or devices that perform such functions as cutting, dissecting, grasping, holding, retracting, or suturing. Most surgical instruments are made from stainless steel. Other metals, such as titanium, chromium, vanadium, and molybdenum, are also used [14].

Some studies presented a new approach to modelling medical design with the new technologies, like a computer implemented format [15]. The whole system perspective used an agent based methodology whereby actor and service agents cooperated to produce a treatment decision based on medical evidence whilst the system adapted to its users' demands and perceived profiles. More precisely, development of a new instrument or operation or treatment is reviewed as a systematic and organized process. The complexity engendered by such an approach was handled according to a separation of concerns principle. In this way, the complex interactions of medical concerns and techno engineering possibilities are dealt with as separate aspects of the design process, thus modularising the complexity and incorporating clinical governance concerns into system aspects.

Bas de Mol in his studies about designing medical technology pointed out a paradox of technology-based progress in design in medical technology. "Technology promises progress but also implies threats and it is thus something lay people should fear." [16]. One of his several reasons seems to be the impossibility to control of the shortcomings. The aforementioned threats are susceptible to control, which should start at the design stage. If one is aware of the principles creating these threats to operation safety concerns and the credibility of instrument technology, one can focus on proactive progress control. Despite the fact that questions about optimisation remain secondary to objectives, the consequences of failure are well known. The question whether a new instrument or drug is safe enough compared to the standard treatment is being taken more and more seriously, especially within a framework of the current regulatory system.

1.2.3 Toward the Scenario Based Design Methodology

The complexity of medical instruments in proved. A proposition to design medical systems as closer as possible to the idea and needs of the users is to design with them.

A Participatory Design (PD) workshop is one in which developers, business representatives and users work together to design a solution [17]. PD workshops are most effective early in the design process, when ideas can be less constrained by existing code or other infrastructure.

In PD, the users are involved in development of the products; in essence they are co-designers. A great number of projects are currently made around Software, Web and Human-Machine Interface development [18].

The main advantage of the user centred design (UCD) approach is that a deeper understanding of the psychological, organizational, social and ergonomic factors that affect the use of computer technology emerges from the involvement of the users at every stage of the design and evaluation of the product [19]. The involvement of users assures that the product will be suitable for its intended purpose in the environment in which it will be used. This approach leads to the development of products that are more effective, efficient, and safe.

The UCD methodology allows designers to imagine and create an appropriate product to the user. Unfortunately in some cases, this product can become too much specific and adapted only to one user, not to a whole of users. For these reasons and to avoid the case of a too specific tool, we will discuss in the next section, the proposal to experiment the Scenario-Based Design methodology (SBD).

The SBD allows designers to create new tools and devices with user participation during all the primary phases of the design process. Many papers deal with the advantages of the SBD and with the way of creating scenarios [20]. In SBD, descriptions of situations become more than just orienting examples and background data, they become first-class design objects. Scenario-based design takes literally the adage that a tool is what people can do with it — the consequences it has for them and for their activities that use it.
In SBD, scenarios of established work practice are constructed. Each scenario depicts actors, goals, supporting tools and other artefacts, and a sequence of thoughts, actions, and events, through which goals are achieved, transformed, obstructed, and/or abandoned. The scenarios are iteratively analyzed, revised, and refined.
However, Bordeleau and al. explain that, to the best of their knowledge, there exists no patterns that address the difficult problem of integrating a set of possibly concurrent and interacting scenarios into a set of component behaviours [21]. They describe one of the several behaviour integration patterns they have identified to help designers define communicating hierarchical state machines from scenario models.

In this first part, we have presented proposed researches about Integrated and co-Evolutive Design Process, mainly by introducing the representation of the relation between problem and solution. We shown reflections about complexity of medical instruments design and explain that SBD can answer the issue of a better integration of the user in the Design Process.

2 PROPOSAL OF AN APPRORIATED METHODOLOGY

2.1 A Co-Evolutive model

In this chapter we propose a vision-review on current models and new point of view in the area of process integration and knowledge resources management. It focuses on the conceptual process design approach and offers some comments on the recent tendencies in Bioinstrumentation and process system engineering practice. The discussion is extended to the area of instrument (tool) development starting with the simultaneous progress in use.

The two domains of this co-Evolutive approach (instrument and use) appeared separately in the literatures. One of the main categories of development models for product in mechanical and industrial domain concerned representing the needs in design process for example in integrated design and Concurrent engineering [22]**.** The other category which appeared in the literature correlates the domains of the representation of the product development [23], definition of the usage position [24], and the examination of the tool by expert user [25]. On the other hand, studies of ergonomics proposed the models based on observation of user needs. SBD, as will be discussed, PD, UCD are the most famous examples in this case. Since the first paper written on the specification for the method in 1967 by Annett and Duncan, the past 38 years have seen many developments in ergonomics research and methods hierarchical task analysis (HTA) has remained a central approach.

Why the existing methodologies couldn’t be used? As we discussed in the first part, there are two approaches in this case, first those who talk about the co-evultion of problem and the solution, and second those who propose the simulation like a reliable situation for verifying the solution. We will describe in our model as the schematic form below (Figure 2) that the confrontation between declared need and proposed solution may be used not only as the insight of clarifying the need but also for the modification of the solution. This point of view matters in the condition that the use (who could be considered like a problem) couldn’t be clearly defined, for example in the innovative surgery. In this proposition, each arrow shows progress of its subject with time. The procedure between one positions to another pass through another stage called emulation. Emulation is a physical experience or test (against simulation in the virtual environment) but in the unreal environment. It means a confrontation

between instrument and the use, including the user. In other words, in emulation the prototype of instrument is employed by the user in a modelled situation of use.

There are two activities in this model. The first one is the confrontation analysis of tool and the operation, which can be called the problem description stage. In this stage, a problem is explained as a malfunction function of instrument regarding its task associated. The second activity is the solution synthesis compared to the discussed problems and the behaviour of use. A new solution could push some modifications in instrument criteria and also in the use scenario.

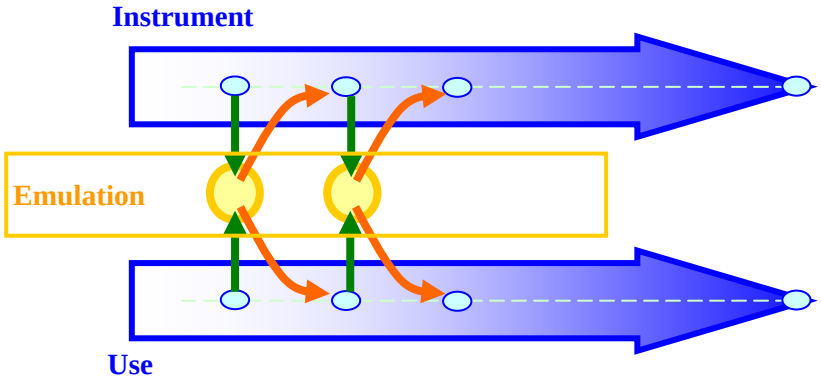

Figure 2. Proposition of a new co-Evolutive methodology for integrated design

The schematic forms of these two activities are shown in figure 3-A and 3-B. We will need an interface between any of two major arrows and the emulation stage. These two interfaces should provide a representation of instrument and use which could be analysed in details in the confrontation. It means that each interface has to present its domain (instrument or use) in the emulation, and secondly this presentation has to be connected to the other one. Further to this reason, we select two interfaces one from mechanical domain for the representation of instrument, and the other from ergonomics domain for description of use.

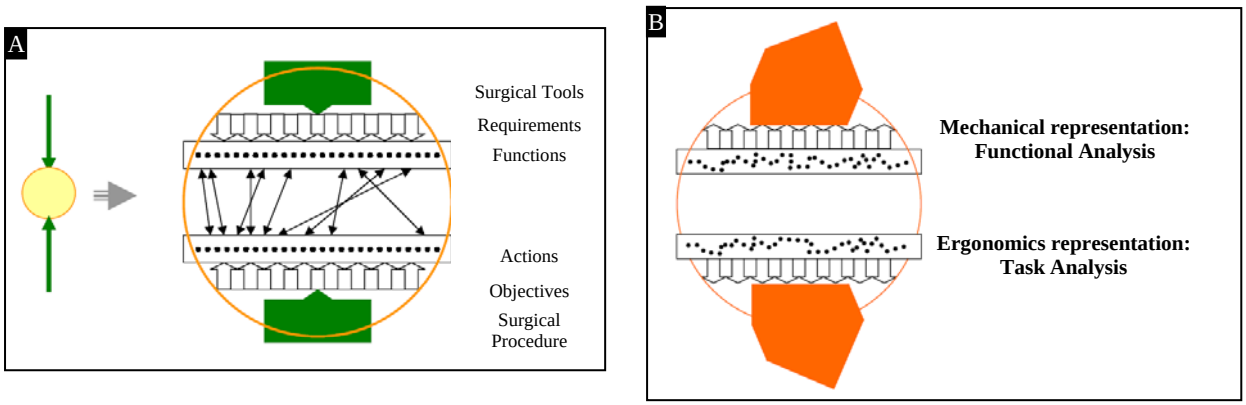

Figure 3. Two activities of confrontation: A) Problem definition and B) Solution synthesis

2.2 Functional Analysis

Different proposed methods can be classified into two major groups: Those which are formalized (Value Analysis (VA), Pahl and Beitz,) and those which are somehow emergent (Integrated Design). The method, we have used for our study, is functional analysis (FA). Despite its initial use in VA, recently FA is used increasingly in commercial negotiations, relation between different services of a venture and cost-based design. Fundamental vocabulary and categorization are defined in the standards.

The first step of FA is validation of the costumers' demands. A function is defined as exclusive description of the action of the product or one of its constituents. Two types of function can be distinguished: Service function and technical function. Service function is defined as an action which product is supposed to be or to do, in order to satisfy a part of demand asked by a certain user.

Technical function is an action of one of the constituents or contraction among constituents of the product in order to guaranty the service function.

Characterization of the function

The characteristic used for evaluation of expected performance is named appreciation criteria. It should be mentioned that a function might be associated with more than one appreciation criteria. In order to get a position on the measurement scale of appreciation criteria a level should be defined. A table of characterization is employed for formulation of criteria of appreciations and their attributes (Table 1).

Table 1. Characterization of the function for a mechanical instrument

Function	Criteria of appreciation	Level	Flexibility

2.3 Task analysis

The aim of task analysis is to display and describe the tasks, which should be carried out in order to perform a work. A precise task analysis can also be used to predict or describe the user performance in a given environment. In other words, task analysis consists of relations among objectives, tasks and actions, e.g. to understand the users' objectives and how the user passes from objectives to tasks and then to actions in order to reach the goals.

One of the key distinctions between use of scenario and task analysis and this model is that the former are grounded examples of specific experience, whereas models are more abstract representations of phenomena in the real world. Unfortunately, the term 'scenario' has been abused in the literature and a large number of definitions exist [26]. Indeed, much of the scenario literature, especially in the software engineering tradition [27], is in fact describing event-sequence traces through state transition models. According to the discussion, finally we chose the model named Participatory Design: "Moments" Theory and Implementation [28]. Figure 4 presents a schematic view of this model.

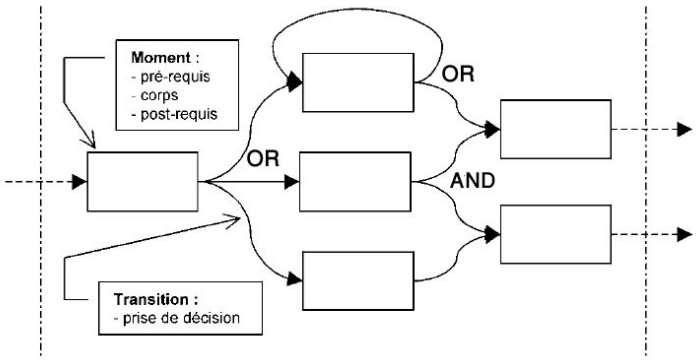

Figure 4. Schematic representation of moments and transitions

2.4 The Solution Synthesis

The aim of this synthesis is to build a new solution from the two analyses described in the precedent paragraph. The synthesis of the functional analysis and the tasks analysis allows the reflexion and then the proposal to new functions for the surgical tools. In the same way, a new proposal of successive surgical actions is done and the surgical procedure (use) evolves in parallel with the surgical tools (instruments) (Figure 2).

3 APPLICATION IN LUMBAR ARTHRODESIS SURGERY

Our aim is to propose the application of the SBD methodology and the new co-Evolutive methodology in the surgical domain, with the aim of proposing new surgical tools adapted to the requirement of the user.

For the detection and the analysis of the surgeon needs, we have to understand this specific surgical operation, the goals and use of the target user in its real environment.

3.1 Description of the operation

In this specific surgical application studied, a particular lumbar fracture is caused by 50% of the serious sport accidents (falls of motorbike, ski, and parapet, etc.). Currently, the "classical" lumbar arthrodesis operation (placed an implant on the L1 vertebra) is carried out by tools introduced against the patient's back through a 25cm large incision. It is a heavy surgical operation consisting in reforming the vertebra fractured, while having beforehand repositioned the adjacent vertebrae with their origin positions. The post operative consequences are very handicapping.

Following this observation, the surgeon has explained his need concerning the use of minimally invasive surgical tools.

Currently, implant represented in figure 5 is set up through a 25cm large incision. That is why the main stem can be "easily" inserted in the three screw heads.

Figure 5. Picture of one part of the current implant placed on the lumbar vertebra of the patient

3.2 SBD approach in MIS

3.2.1 Preliminary works for the first Emulation

Some specific diagrams of the current operative procedure have been written in collaboration with the user. Starting from this diagram, we have identified specific heavy surgical acts where the surgeon uses "classical" surgical tools. This operative part of the complete operative procedure must be modified and adapted to the new surgical tools proposed (SP1 in figure 6).

In MIS, the multiple holes don't allow this "simple" action. In agreement with the surgeon, it has been decided to design a prototype inspired from another surgical tool used from femur fracture. It consists of an L-shape tool the surgeon can easily hold in one hand (P1 in figure 6). The tip of this tool represents the stem which must cross the three screw heads.

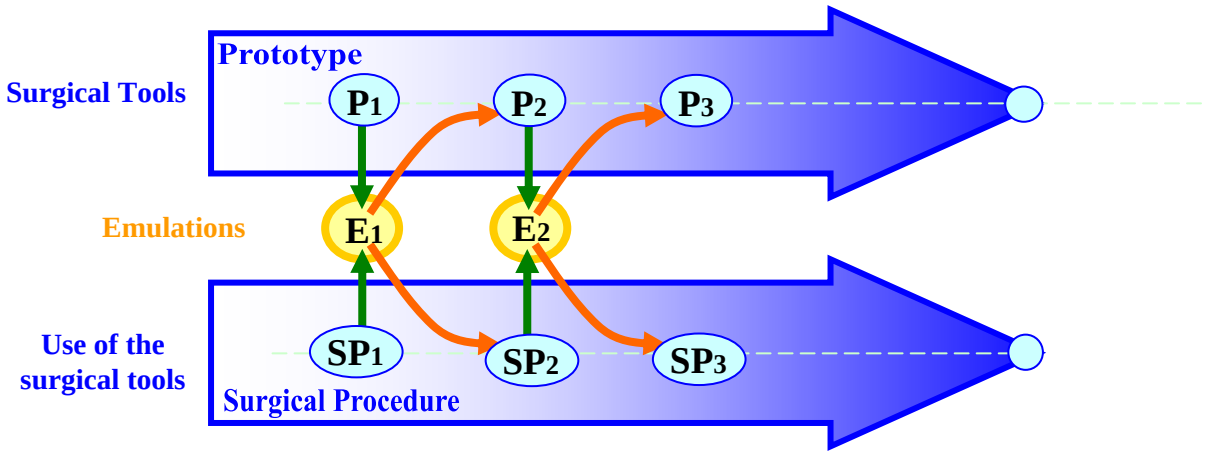

Figure 6. Evolution of the Prototype and the Surgical Procedure versions on the proposed Co-Evolutive model

Healthcare professionals are the ones that can provide scenarios and checking them for realism and accuracy. The surgical tools must be tested under conditions that are as realistic as possible.

In figure 7, we see the surgeon using the prototype P1 in the operative room. During this first Emulation E1, he evaluates the prototype of the surgical tool in the same time than the surgical Procedure SP1.
The difficulty resides in the fact that there is no visibility inside the human body during all this new established operative procedure. The precise placement of the holes (located compared to the vertebrae) depends of the knowledge and the experience of the surgeon. The delicate insertion of the screws through the skin, muscles and grease, without damages caused to the patient, requires the design of complementary surgical tools.

Figure 7. The surgeon is using the first prototype P1 during the first Emulation E1 in real environment

3.2.2 Preparation of the SBD

The decision of SBD and the specific scenario implies a particular preparation of a mannequin which represents the patient [29]. Due to this specific surgical operation, the mannequin must integrate a fractured column and due to the scenario prepared, the surgeon has to preliminary placed three screws in three vertebral pedicles.

Prototypes simulate the user interface, they are used to select alternative designs and uncover problems [30]. A prototype's fidelity, or resemblance to a working device, is determined by its physical and/or conceptual attributes. If installation, control and display layout, or manual operation (i.e. of surgical tools) are of special interest, mock-ups should be used for physical simulations, or "playing". Users can perform the procedural steps to confirm or repudiate the design or layout details.

In the case of small, iterative, prototype evaluations conducted throughout development, two or three participants per test may be sufficient [30]. Employees such as clinical staff may be used, although repeated use of the same individuals can bias the findings. Full usability tests require larger samples drawn directly from the user population. If a device is intended for a fairly homogenous population, data obtained with about 10 individuals' representative of that population may be sufficient to eliminate most problems.

To write a scenario, it is necessary to describe in a simple language the interaction which needs installation. It is important to put of references to technology, except when technology represents a constraint of design which must be represented [31]. It is thus always necessary to have the scenario read again by a user to be sure that it is representative of the real world in which he evolves.
In agreement with the surgeon, we have decided to begin the scenario at a certain stage of the new established operational procedure. Then the scenario makes it possible to mainly test the prototype of tool proposed.

To recover a maximum of information at the end of this experiment, instructions were clearly notified to the surgeon. Frontal and general video cameras and a micro tie were installed to clearly observe the user and record its remarks.

3.3 Application of the proposed co-Evolutive Methodology: Emulations and analyses

3.3.1 General idea

To establish a novel method of analysis, firstly, the knowledge and applications of the interventions should be clarified during the design process. This knowledge is often consists of the order of know-hows used by experts and the applications derived from specializations done in the field. For this reason, we use task analysis modelling, which is one of the mostly used issues in ergonomics and is propagated in several fields such as software engineering, artificial intelligence, and robotics in order to set up human-machine dialogues [32].

In the applied case of new surgical instrument design, we prepared a data collecting form in order to bring together all the possible information from observation in the operating bloc (Table 2). We got the form filled in four steps:

- First, before the operation, asking the surgeon to explain successive objectives of the operation,
- Second, during the operation with the prototype, we asked him to describe what he does and his complement about the instrument. Both of his act and voice were recorded with two different cameras, one established on his head for recording what he sees,
- Third, just after the operation, he asked to summarize his operation and advantages and disadvantages,
- The forth step: some days after, he watches the film of the operation and clarify what he did. In the same time, the filled part of form was verified with the surgeon.

We repeated this emulation twice (E1 and E2) with two different surgeons and while the prototype and the Surgical Procedure were modified according to the results of the first Emulation (E1). Also, the operation scenario was developed for examination more utilities. Finally, the condition of emulation was improved like the mannequin, and the observation setting.

To classify and to allow an easier analysis of the surgeon actions during the emulation, we propos to define these terms:

- An act: it is done by a user. It plays the role of the modification of the environment in which it is developed or of the changing a mental state.
- A surgical gesture: it is an act carried out by a single user, maybe with an instrument, on a precise area of the patient's body and for certain duration.
- An action: it consists of a series of surgical gestures. These actions can be broken down into operation elements in order to reach one of the successive objectives of the operation.

From these definitions, we propose to collect in the table below (Table 2), the data recovered following the emulation:

Table 2. The surgeon acts classification form.

Attribute	Example of Values	Example of Applied form
Class	Surgical Act / Control	Surgical act
Type	Gesture / Visual	Push down
Acting Person	Surgeon / Nurse	Surgeon
Instrument	List of instruments / Without	Kirchner broche
Location	On patient body	level of the spin
Length	Time	3-5 s
Repeat	Number	3 times

3.3.2 Detail experiment

We presented below in more details an example of data collected and analysed.

In a first time, the surgeon S1 uses the prototype P1 with the surgical procedure SP1 during the Emulation E1.
One scenario is expected with some goals described by the surgeon, for example:
Goal B1: Positioning the stem of *Protige* (name of the new instrument) in the heads of three screws,
Goal B2: Fixing the stem in the screws heads.

These two goals are accomplished by carrying out some surgical gestures. These gestures are written in the *surgeon acts classification form* (Table 3) as below.

Table 3. The surgeon acts classification form: the gestures G01 and G09 of the Emulation E1

Act	Class	Type	Actor	Tool	Localisation	Time	Number
(G01) Locate the vertebra	Surgical Act	Manual locate	Surgeon	Without tool	Patient's back	3-5 s	2
(G09) Fix the stem	Control	Visual control	Surgeon	Radiography	Head of the screw on the vertebra	10-12 s	2

We defined the whole of the surgical gestures in a library: the surgical gesture number XX is thus noted (GXX).

Once this classification form completed, it is easy for us to know the succession of the actions carried out by the surgeon to satisfy his goal. Thus, to satisfy B2:

- Action 1: To keep the stem in the screws heads (G08, G09, G11).
- Action 2: To descend the bolt towards the screw head by the passage gun (G14, G15, G16, G18, G20).
- Action 3: to tighten the screws by maintaining the stem in the head of the three screws (G21, G23, G26, G27, G28).

The successive steps described above enable us to propose modifications not only to satisfy the requirements of the surgeons (actions to realise), but also to translate these users' requirements into functional requirements for the designers (functions for the tools).
For example, the prototype of the surgical tool (tool which cannot explicitly be shown because in validation by a company):

- Surgeon's point of view: curve of the stem related to the prototype (this stem must be more curved because the user is obstructed by the patient's skin at the entrance point) compared to the G02 gesture,
- Designer's point of view: the stem must have a standard curve which must be easily adjustable according to the patient: the material should be considered.

3.3.3 Towards the next emulation

Thanks to these analyses made at the end of the first Emulation E1, a new Action 3 is proposed. More details and specific explanations are given to the surgeon for a better use of the new prototype P2 proposed:
Action 3: To be able to descend and fix the bolts in the heads of the screws, the stem and the three passage guns must be maintained at the same time.
These simultaneous actions imply the realization of a groove in the tip of the passage gun to allow a guidance of the stem in the alignment of the screws heads. The modifications of the surgical tools prototypes P2 are in reflexion and we are thinking in the same time, with the surgeon, about a new surgical procedure SP3 adapted to these future tools.

4 CONCLUSION AND PERSPECTIVES

In this paper, we proposed a new model of co-Evolutive methodology for integrated design. Based on the literature about similar approach on co-Evolutive progression of problems and solutions, we proposed this design process which integrate the evolution of the surgical instruments in the same time than its usage. In this case, the complexity of the medical instruments is taking into account. The SBD is also integrated in this model: the surgeon is completely included in this model and all the scenarios are thinking with the users.

The confrontation and the solution synthesis are proposed in this article, by developing the functional analysis and the task analysis. The functional analysis (Table 1 proposed area tool) allows a recapitulation and a speed reading of the functions, their characterizations, and margin accepted for the levels of the appreciation criteria.

The tasks analysis is realised thanks to the surgeon acts classification form (Table 2): in a first time, the different goals are defined by the surgeon. Then, this table is completed by all the acts (class, type, actor, tool, localisation, duration) which realise an action and which are necessary to achieve the goal.

The last part of this paper deals with the two experimentations with surgeon in the operative bloc. Two Emulation have been made: the propositions of new surgical tools functions and new surgical procedure adapted have been noticed and analysed to complete our co-Evolutive model proposal. All the goals, surgical gestures and actions are listed for complement study.

Our future work concerns firstly the observations of the current design processes in the industry. Then, it consists in a more precise analyse of the actor's chain and tools which support the discussion, communication and needs expressions. Then, the observation of the relations with users will help us to propose and increase more and more the co-Evolutive design process model.

ACKNOWLEDGEMENTS

We gratefully acknowledge the support of Dr. Jérôme Tonetti and Dr. Hervé Vouaillat (from Service Orthopédie-Traumatologie, Grenoble hôpital-nord, La Tronche) for their collaboration. We would also like to thank the European network of excellence "Virtual Research Lab – Knowledge Community in Production" (VRL – KCiP) for supporting this work.

REFERENCES

[1] Prudhomme, G., "Le processus de design de systèmes mécaniques et son enseignement-La transposition didactique comme outil d'une analyse épistémologique", Thèse de doctorat de l'Université Joseph Fourier (1999)

[2] Yoshikawa, H., "General Design Theory and a CAD System", Man-Machine Communication in CAD/CAM, T. Sata and E. Warman, eds., North-Holland, Amsterdam, 35-58 (1981)

[3] Tomiyama, T. and Yoshikawa, H., "Extended General Design Theory", Design Theory for CAD, H. Yoshikawa and E.A. Warman, eds., North-Holland, Amsterdam, 95-130 (1987)

[4] Reich, Y., "A Critical Review of General Design Theory", Res. Eng. Des, 7(1), 1-18 (1995)

[5] Kakuda, Y., Kikuchi, M., Abstract Design Theory, Ann. Japan Assoc. Phil. Sci., 10(3), 19-35 (2001)

[6] Culley, S.J., McMahon, C.A., The relationship between engineering design and information and knowledge, ASME 2006 International Design Engineering Technical Conferences & Computers and Information in Engineering Conference, DETC2006-99739 (2006)

[7] Sharif Ullah, A.M.M., Integration of high-level design information with axiomatic design formulation, The Third International Conference on Axiomatic Design ICAD-2004-44 (2004)

[8] Blanco, E., "L'émergence du produit dans la design distribuée", Thèse de doctorat INPG (1998)

[9] Blanco, E., Garro, O., Jeantet, A., "La construction conjointe du problème et des solutions en ingénierie simultanée", actes de la journée PRIMECA, concurrent engineering, Lyon (1998)

[10] Brissaud, D., Garro, O., Poveda, O., "Design process logic capture and support by abstraction of criteria", Research in engineering design, 19(4), 162-172 (2003)

[11] Dorst K. and Cross N., « Creativity in the design process : co-evolution of problem-solution », Design Studies, 22, 5, 425-437, 2001

[12] Maher M.L., Tang H.T., « Co-evolution as a computational and cognitive model of design », Research in Engineering Design, 14, 1, 47-64, 2003.

[13] Lonchampt, P., "Co-évolution et processus de design intégrée de produits : Modèle et support de l'activité de design", Thèse de doctorat de l'Université INPG (2004)
[14] Surgery encyclopedia (*http://www.surgeryencyclopedia.com*), Copyright © 2005 by Thomson Gale, Thomson Corporation.
[15] Taleb-Bendiab, A. et al, A principled approach to the design of healthcare, Reliability Engineering and System Safety, 91, 1576–1585 (2006)
[16] Bas de Mol, Designing medical technology, Safety Science (2006, in press)
[17] Gaffney Gerry, Participatory Design Workshop, Usability Techniques Series, 1999 Information&Design
http://www.infodesign.com.au
[18] Katz-Haas, R., "A summary of this article, Ten Guidelines for User-Centred Web design.", Usability Interface Vol 5 (n°1, July 1998)
http://www.stcsig.org/usability/topics/articles/ucd%20_web_devel.html
[19] Abras, C., Maloney-Krichmar, D., Preece, J., "User-Centered Design", Bainbridge, W. Encyclopedia of Human-Computer Interaction. Thousand Oaks: Sage Publications (2001, in press)
[20] Rosson Mary Beth, Carroll John M.: Scenario-based usability engineering. Symposium on Designing Interactive Systems 2002 : 413
[21] Bordeleau, F., Corriveau, J. P. and Selic, B. (2000). A scenario-based approach to hierarchical state machine design. In ISORC '00: Proceedings of the Third IEEE International Symposium on Object-Oriented Real-Time Distributed Computing, page 78. IEEE Computer Society
[22] Hinde, C.J., Fletcher, G.P., Problem-centered design in concurrent engineering, International Journal of Industrial Ergonomics, 16, 383-389 (1995)
[23] Eynard B., Girard P., Doumeingts G., « Control of engineering processes throught integration of design activities and product knowledge », Integration of process Knowledge into Design Support, Kluwer Academic Publishers, ISBN 0-7923-5655-1, 1999.
[24] Monö, R., "Design for Product Understanding", Liber AB, Stockholm, 1997
[25] Bisseret A. et al, Les techniques pratique pour l'étude des activités expertes, Octares, 1999
[26] Rolland, C., Achour, C.B., Cauvet, C., Ralyte, J., Sutcliffe, A.G., Maiden, N.A.M., et al., A proposal for a scenario classification framework. Requirements Engineering 3 (1), 23–47. 1998
[27] Kaindl, H., An integration of scenarios with their purposes in task modelling. In: Olson, G.M., Schuon, S. (Eds.), Designing Interactive Systems: DIS 95 Conference Proceedings, Ann Arbor, MI, ACM Press, New York, pp. 227–235, 1995.
[28] Caelen, J. Jambon, F and Vidal, A., Participatory Design: "Moments" Theory and Implementation; Revue d'Interaction Homme-Machine Vol 6 N°2, 2005
[29] G. Thomann, J. Caelen, "Proposal of a new Design Methodology including PD and SBD in Minimally Invasive Surgery", Accepted for publication in Proceedings)12th IFToMM World Congress, Besançon, France, June 18-21, 2007.
[30] Sawyer, D., Aziz, K. J., Backinger, C. L., Beers, E. T., Lowery, A., Sykes, S. M., Thomas, A., and Trautman, K. A. 1996. Do it by design: an introduction to medical factors in medical devices. Rockville, MD: Center for Devices and Radiological Health.
Available from the FDA home page at:
www.fda.gov/cdrh/humfac/doit.html.
[31] Gaffney Gerry, Scenarios, Usability Techniques Series, 2000 Information&Design
http://www.infodesign.com.au
[32] Pierrel, J.M., "Dialogue oral homme-machine", Hermès, 1987

Contact: Rahi Rasoulifar
institution/university : Grenoble Institute Of Technology
department : G-SCOP Laboratory (Sciences for Design, Optimization and Production)
street : 46 avenue Félix Viallet
PO Box, City : 38000 GRENOBLE Cedex 01
Country : FRANCE
Phone : (+0033)4 76 82 51 66
e-mail : rahi.rasoulifar@g-scop.inpg.fr