HAL
open science

On-chip self-sensing function of 4x4 matrix micromachined resonating piezoelectric membranes for mass detection applications

M. Guirardel, Liviu Nicu, Daisuke Saya, S. Hinh, J. Sicard, Denis Lagrange, Fabrice Mathieu, Eric Cattan, Denis Remiens, C. Bergaud

To cite this version:

M. Guirardel, Liviu Nicu, Daisuke Saya, S. Hinh, J. Sicard, et al.. On-chip self-sensing function of 4x4 matrix micromachined resonating piezoelectric membranes for mass detection applications. 2004 IEEE International Frequency Control Symposium and Exposition, Aug 2004, Montreal, Canada. pp.317-320, 10.1109/FREQ.2004.1418472 . hal-00162779

HAL Id: hal-00162779

https://hal.science/hal-00162779

Submitted on 12 Jul 2022

HAL is a multi-disciplinary open access archive for the deposit and dissemination of scientific research documents, whether they are published or not. The documents may come from teaching and research institutions in France or abroad, or from public or private research centers.

L'archive ouverte pluridisciplinaire **HAL**, est destinée au dépôt et à la diffusion de documents scientifiques de niveau recherche, publiés ou non, émanant des établissements d'enseignement et de recherche français ou étrangers, des laboratoires publics ou privés.

Distributed under a Creative Commons Attribution - NonCommercial 4.0 International License

On-chip self-sensing function of 4x4 matrix micromachined resonating piezoelectric membranes for mass detection applications

Matthieu Guirardel, Liviu Nicu, Daisuke Saya, Sary Hinh, Julien Sicard, Denis Lagrange, Fabrice Mathieu
LAAS-CNRS, Toulouse, France.
email: nicu@laas.fr

Eric Cattan, Denis Remiens
IEMN-CNRS / DOAE, Villeneuve d'Ascq, France

Christian Bergaud
LIMMS / CNRS, University of Tokyo, Tokyo, Japan. email: bergaud@iis.u-tokyo.ac.jp

***Abstract*— In this paper, we studied the dynamic behavior of micromachined piezoelectric membranes as an alternative to the QCMs biosensors. Contrary to FPW sensors that use progressive waves at the resonance, we use standing waves on our mechanical structures which allow us to obtain higher integration density. 4x4 matrixes of piezoelectric membranes use $PbZr_xTi_{1-x}O_3$ (PZT) as piezoelectric film which geometries have been drawn by lift-off techniques. Each membrane (circular shaped, with a radius equal to 150 microns) can be individually addressed for actuation and/or sensing. Here we show that the same kind of membranes exhibit excellent self-sensing capabilities by using the direct piezoelectric effect of the PZT layer. The open-loop resonant frequencies of several membranes were measured by examining the self-induced charge on the sense electrode using a proximity electronics circuit. We simultaneously performed resonant frequencies measures by means of a dynamic optical interferometer that completely matched the electrical self-sensed resonant spectra. In this case the piezoelectric membranes were actuated in two different ways, either by using an external transducer or by using the self-actuating (reverse piezoelectric effect) capability of each membrane.**

micromachined membrane; microbalance; PZT

I. INTRODUCTION

Different transduction principles are possible for bio or chemical sensing in liquid phase. Thermal, electrochemical, optical, and acoustic wave sensors are in use [1]. The latter are often referred to as 'mass-sensitive' due to modifications of mechanical properties of the transducer. Mass-sensitive transducers are acoustic wave sensors in which the changes occurring at the transducer surface can be followed by measuring the changes in the resonant behavior. The piezoelectric effect is used to generate acoustic waves at ultrasonic frequencies by applying electrical fields.

Nowadays, Quartz Crystal Microbalance (QCM) devices are still the most widespread and proven resonant biosensors allowing successful characterization of biomolecular systems in their natural aqueous environment. However, the main limitations of QCMs (like their miniaturization or integration in multisensors arrays) stirred up to propose new miniaturized devices like the flexural plate wave (FPW) that successfully addressed the sensitivity issue at the expense of more challenging electronics when used as biosensors [2].

In this paper, we studied the dynamic behavior of micromachined piezoelectric membranes as an alternative to the QCMs biosensors. Contrary to FPW sensors that use progressive waves at the resonance, we use standing waves on our mechanical structures which allow us to obtain higher integration density. This kind of device is also used in piezoelectric micromachined ultrasonic transducers (PMUT) [3].

We have shown elsewhere [4] that our sensors have high mass-sensitivity in aqueous media of about 1.24 Hz/pg (with a resonant frequency at about 145 kHz). In this experiment, the actuation was done using the piezoelectric thin film and a laser beam deflection technique with lock-in detection was used to follow the resonance frequency. However signal stability in the diffusive media (gold colloids in solution) raised the problem of using this optical technique; therefore we show here how we use direct piezoelectric effect to measure resonance frequency. We also compare external excitation with internal actuation with these two detection means.

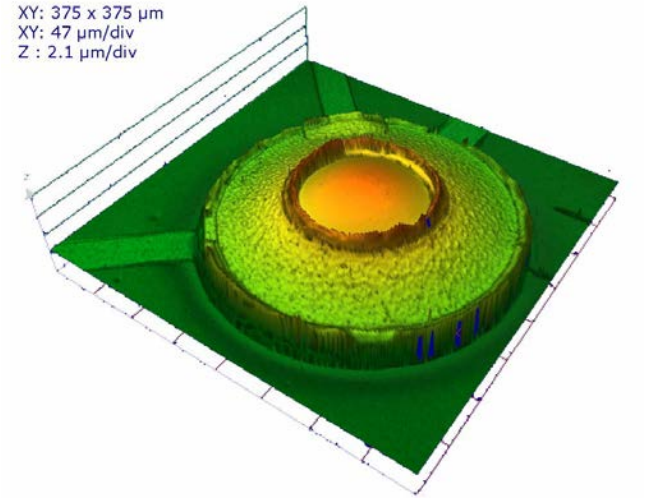

Figure 1. Topography of a single device, PZT film is ~800 nm thick, Ti/Pt electrodes are 10/120nm thick, passivated by 200nm of PECVD silicon oxide.

II. DESIGN AND FABRICATION PROCESS

A. *Fabrication process*

4×4 matrixes of piezoelectric membranes were fabricated by standard micromachining techniques starting with a Silicon-On-Insulator wafer (SOI 1.3/1/525µm). Each membrane (circular shaped, 150 µm of radius) can be individually actuated through a $PbZr_xTi_{1-x}O_3$ (PZT) film. Each membrane (circular shaped, with a radius equal to 150 microns) can be individually addressed by the top electrode. Fig. 1 shows the topography of a circular membrane.

The fabrication process is depicted in Fig. 2. The first step consisted in the growth of a 450 nm thick thermal silicon dioxide film on the SOI wafer and a sputtered Pt/TiO_x electrode (10/120 nm). This film was lifted-off with a Shipley 1818 photoresist to draw the bottom electrodes. A 46/54 $PbZr_xTi_{1-x}O_3$ film (~800 nm) was then deposited by rf magnetron sputtering. In most published studies, PZT films are deposited at 650°C. Instead, our PZT film [5] was deposited without intentional substrate heating to allow patterning by lift-off of the PZT film with the Shipley 1818 photoresist. Deposited films were therefore amorphous since temperature rise during deposition does not exceed 150°C. After resist stripping, a 30 min crystallization annealing at 625°C was performed. Then, another deposit followed by a lift-off was processed with ZnO in order to avoid electrical shortcut in areas where upper electrodes are above non-crystallized PZT (cf Fig. 2). Finally upper electrodes (Ti/Pt) were sputtered, lifted-off and annealed. A passivation silicon oxide film (250 nm) was then deposited by Plasma Enhanced Chemical Vapor Deposition (PECVD). Contact pads were opened in a buffered HF solution. Finally, the circular membranes (with an active area of 0.07 mm^2) were defined by etching vertical sidewalls cavity on the backside of the wafer with an inductively-coupled plasma (ICP) etch machine. The 1 µm-thick SiO_2 layer of the SOI substrate acts as an etch stop layer for the ICP process. This layer was then removed using a reactive ion etching process.

The first version of this device [6] was released with only one lift-off of the PZT and the upper electrode simultaneously.

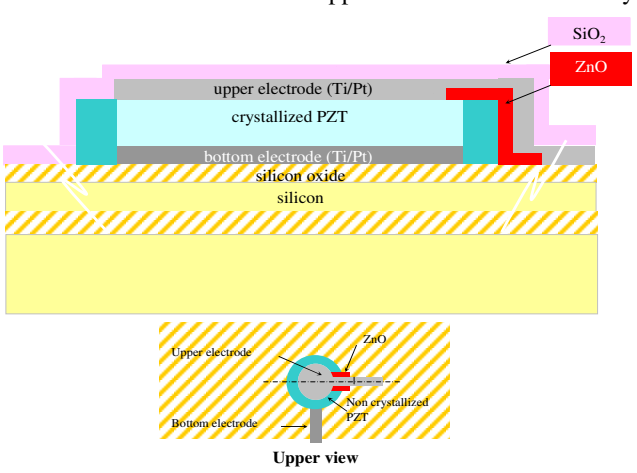

Figure 2. Schematic design of a piezoelectric membrane.

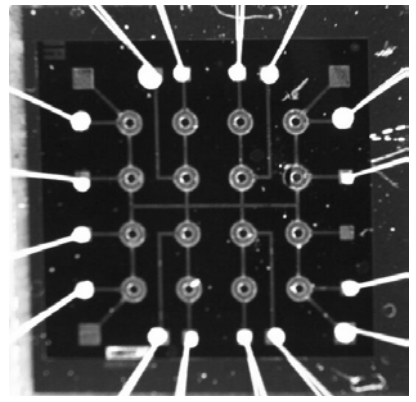

Figure 3. 5x5 mm² chip of 4x4 membranes matrix with wire connections

This process was actually simple but had the disadvantage to add a high line capacitance between the contact pad and actuation area. Therefore, our previous version [4] required three level of lift-off (for the PZT and the two electrodes) nonetheless we obtained shortcuts where the upper electrode reaches the sides of the PZT film because it is amorphous in these areas.

A single membrane is shown fig. 1, this topography shows clearly the annular geometry of the PZT actuator and its electrodes. Fig. 3 shows a 5×5 mm^2 die including a chip with 16 piezoelectric membranes that has been glued on a TO8 package with each membrane bonded to the TO8 pins. All membranes are connected with a common ground electrode. To protect the electrical signals from short circuiting through the fluid, each bonding wire was coated with a biocompatible silicon sealant (not shown on this photograph).

B. *Finite elements analysis*

Another way of our work was to compare finite elements computations with experimental results. The multi-layer composite structure of our device is complex. Six layers were implemented in the model (Cf Fig. 2): monocrystal silicon of the SOI, silicon oxide under bottom electrode, PZT film, upper electrode and passivating silicon oxide, only the ZnO layer was not mentioned in the computed model.

Static deformation and modal analysis were performed with CoventorWare 2001.3 software. The first step of this study was to obtain a static deflection compatible with the static topography shown fig. 1. With this aim in view, we modified stress values of different layers. The circular geometry was another difficulty to get over. Polygonal model (20 sides) gave better results than circular model with tetrahedric meshing due to meshing difficulties in boundaries with the circular model.

Finally, we found a compromise between static deflection and resonance frequencies with the following values: -50 MPa in silicon, -300 MPa in silicon oxide layers, 500 MPa in Platinum electrodes and 300 MPa in the PZT film. These values were computed with global element size fixed at 10 µm and gave a static deflection of 3 µm, a first resonance frequency at 376 kHz and the second resonance mode at 561.5 kHz. Fig. 4 shows some results from these simulations. Works

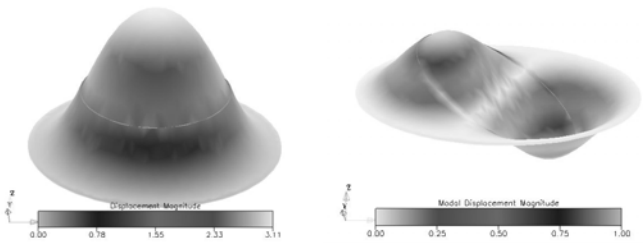

Figure 4. Finite element analysis of the mechanical behavior of the piezoelectric membrane
(left) static deflection , max = 3 µm
(right) second resonance mode shape at 561 kHz

are in progress concerning the stress in the different layers and the over-etching resulting from the deep etching.

III. EXPERIMENTAL SET-UP AND RESULTS

A. Comparison of vibration spectra with external or internal actuation

Electrical detection means that we use the direct piezoelectric effect to detect charges generated by the membrane oscillation. Until now, we couldn't detect any charge between the electrodes because of a leak resistor around 50 ohms in parallel to the normal capacitance. When any charge was generated, it was dissipated into this leak resistor which made impossible its detection. Nonetheless membrane actuation was feasible with a level of current. In the previous section, we have explained from where leaks originated and how we find a solution to the leak resistance (with the ZnO film). Nowadays our leak resistors have values between 200 kΩ and 2 MΩ.

To convert the oscillation generated charges in a detectable voltage, we use proximity electronics using a charge amplifier circuitry nearby the TO8 package where are bounded the chip. A simple operational amplifier AD825 and a couple of resistor and capacitor in the feedback loop were used to convert these charges. We realized this 4x4 mm^2 circuit with surface mounted components (SMC) the nearest to the TO8 package in order to improve signal to noise ratio, also the piezoelectric external transducer was covered by a copper shield.

Fig. 5 shows the mechanical behavior comparison between spectrum from internal actuation with the PZT thin film and optical beam deflection technique to observe the membrane oscillation (A), and external actuation of the package with a piezoelectric actuator with the same optical measurement set-up (B), and the same excitation (external) with electrical detection (C) through the charge amplifier.

We can first notice that external actuation generates lot of small peaks due to coupling between membranes, because all membranes are actuated but differ in resonant frequency. Nevertheless, we can easily recognize resonant peaks even if the first resonant frequency of the focused membrane cannot be distinguished precisely. Now, if we consider the two last spectra, which differ in their detection method (optical for B

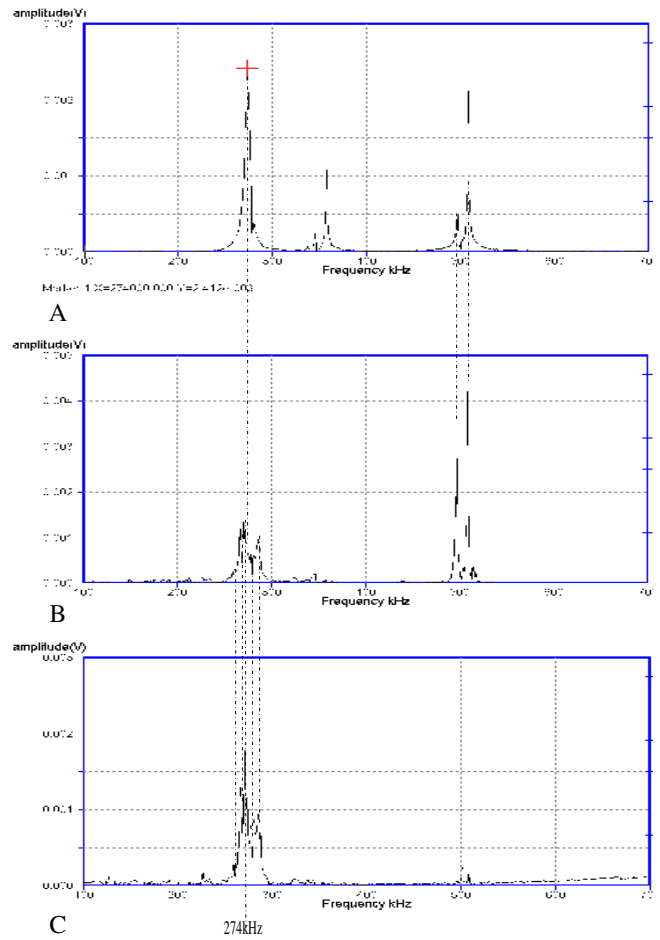

Figure 5. Vibration spectrograms. A: internal actuation with optical beam deflection measurement of the vibration. B: external global actuation with optical beam deflection technique. C: external actuation with electrical detection of vibration within direct piezoelectric effect and a charge amplifier.

piezoelectric for C), we can easily see the same behavior for the first resonant mode but attenuation is easily discernible for the following mode. This attenuation is due to the charge amplifier bandwidth, restricted by the capacitance between electrodes of the piezoelectric film (around 200pF) and the operational amplifier gain bandwidth product (21MHz). To confirm this observation we simulated with Orcad-PSpice the electric behavior of our charge amplifier that showed a cutoff frequency at 340 kHz.

B. Simultaneous piezoelectric detection and actuation

At this point of our works we tried to get simultaneously piezoelectric actuation of the membranes and detection of their resonance frequencies by means of the same PZT patch. First tests showed that if out of resonance, oscillation is low and the current is only due to the membrane impedance, at the resonance this current is added to the current generated by the oscillations. In order to detect this current we remove the 'out of resonance' current with a reference branch (resistor and

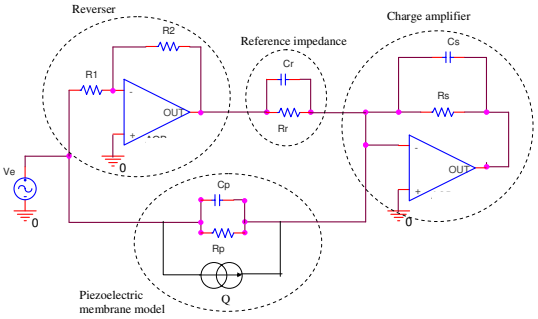

Figure 6. Electrical circuit of charge amplifier with reference branch used to simultaneously excite and detect resonnant frequencies of the piezoelectric membrane.

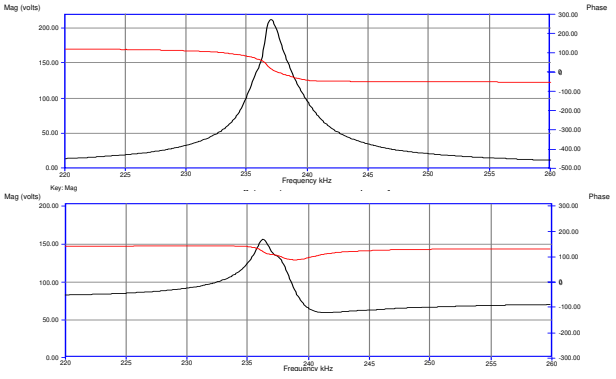

Figure 7. Optical (up) and electrical (bottom) frequency responses of a microfabricated membrane with internal actuation

capacitor) in the electronic circuit of the charge amplifier (fig. 6) such as ref [6]. The results sound very encouraging. Fig. 7 shows comparison spectra between optical detection and electrical detection with this internal actuation.

IV. POTENTIAL APPLICATION: DIP-AND-DRY MEASUREMENT

A device was used to quantify the gold colloid adsorption onto the resonator surface by performing a dip-and-dry test. The silicon dioxide surface layer of the microresonator had been functionalized with an amino-silane self-assembled monolayer next, negatively charged gold colloids in suspension in a buffer solution adsorb on this surface. The mass loading induced by the adsorption on the surface of the piezoelectric resonator leads to a change of the resonant frequency. The microresonator is excited at its fundamental resonant frequency by applying an AC voltage of 1 V to the piezoelectric layer. For the dip-and-dry experiment, a droplet of 15 µl of a solution containing 40-nm gold colloids with a concentration of 9 x 10^{11} particles/ml at pH 5.3 was placed onto the sensor surface. The resonant frequency shifts from 236.3 kHz to 235.3 kHz after 90 min of incubation (fig.7). This frequency shift was correlated with the number of gold colloids adsorbed on the surface. Here we show that for dip-and-dry test we can evaluate mass variation for chemical or biological systems.

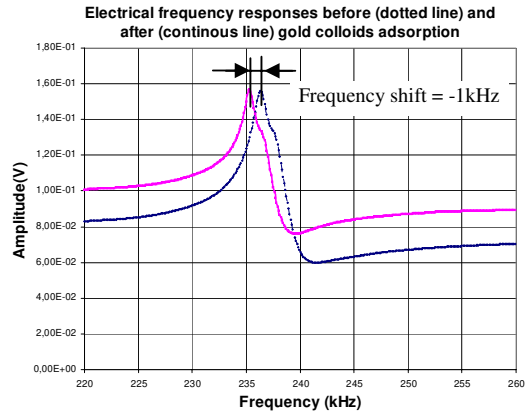

Figure 8. Electrical frequency responses of the membrane measured before (--) and after (–) adsorption of gold colloids

V. CONCLUSION AND PERSPECTIVES

A complex multi-layer microresonator based on standing waves on a silicon membrane is used with its self-sensing capabilities (direct piezoelectric effect) in order to show that it can be used in mass detection applications. The open-loop resonant frequencies were measured using a proximity electronic circuit, and care has been taken to the shielding of sensing electronics in order to improve signal to noise ratio.

Comparisons between spectra with different actuation or detection conditions show that the mechanical behavior is well detect by this direct method. Indeed, we can also measure resonant frequency shifts by using a complete integrated electronic method. This last point let us expect to use this method in liquid media to track kinetics in chemical or biological reactions.

[1] J. Janata, M. Josowicz, P. Vanysek, D.M. De Vaney, “Chemical sensors,” Anal Chem, vol. 70, 1998, pp. 179R-208R.

[2] B. Cunningham, M. Weinberg, J. Pepper, C. Clapp, R. Bousquet, B. Hugh, R. Kant, C. Daly, E. Hauser, “Design, fabrication and vapor characterization of a microfabricated flexural plate resonator sensor and application to integrated sensor arrays,” Sens. Actuat. B, vol. 73, p. 112, 2001.

[3] P. Muralt, D. Schmitt, N. Ledermann, J. Baborowski, P. K. Weber, W. Steichen, S. Petitgrand, A. Bosseboeuf, N. Setter, P. Gaucher. "Study of PZT coated membrane structures for micromachined ultrasonic transducers" IEEE Ultrasonics Symp. Proc., Piscataway (USA), IEEE, Proc. Vol.1754, pp.907-911, 2001

[4] M. Guirardel, L. Nicu, D. Saya, Y. Tauran, E. Cattan, D. Remiens, C. Bergaud, “Detection of Gold Colloid Adsorption at a Solid/Liquid Interface Using Micromachined Piezoelectric Resonators,” Japan. J. of Appl. Phys., vol. 43 No.1A/B, p. L111, 2004.

[5] B. Jaber, D. Remiens, F. Cattan, P. Tronc, B. Thierry, “Characterization of ferroelectric and piezoelectric properties of lead titanate thin films deposited on Si by sputtering,” Sens. Actuat. A, 63, p. 91, 1997.

[6] M. Guirardel, C. Bergaud, E. Cattan, D. Remiens, B. Belier, S. Petitgrand, A. Bosseboeuf, “PZT polarization effects on off-centered PZT patch actuating silicon membrane,” Sens Actuat. A, Vol. 110, No. 1-3, pp. 385-389, 2004.

[7] Y. Miyahara, M. Deschler, T. Fujii, S.Watanabe, H. Bleuler, "Non-contact atomic force microscope with a PZT cantilever used for deflection sensing, direct oscillation and feedback actuation," Appl. Surf. Sci., Vol. 188, pp. 450-455, 2002