HAL
open science

Adaptive Rejection of unknown finite band disturbances - Theory and applications

Ioan Doré Landau, Aurelian Constantinescu

To cite this version:

Ioan Doré Landau, Aurelian Constantinescu. Adaptive Rejection of unknown finite band disturbances - Theory and applications. Symposium on Mechanical Control, Jun 2006, Berkeley, Ca, United States. hal-00137441

HAL Id: hal-00137441

https://hal.science/hal-00137441v1

Submitted on 22 Mar 2007

HAL is a multi-disciplinary open access archive for the deposit and dissemination of scientific research documents, whether they are published or not. The documents may come from teaching and research institutions in France or abroad, or from public or private research centers.

L'archive ouverte pluridisciplinaire **HAL**, est destinée au dépôt et à la diffusion de documents scientifiques de niveau recherche, publiés ou non, émanant des établissements d'enseignement et de recherche français ou étrangers, des laboratoires publics ou privés.

Adaptive rejection of unknown finite band disturbances - Theory and applications

Ioan Doré Landau[1] and Aurelian Constantinescu[2]

[1] Laboratoire d'Automatique de Grenoble
ENSIEG, BP 46
38402 Saint Martin d'Hères, France
landau@lag.ensieg.inpg.fr

[2] Electrical Engineering Department
Ecole de Technologie Supérieure
1100 rue Notre-Dame Ouest
Montréal (Québec) H3C 1K3, Canada
aconstan@ele.etsmtl.ca

Prelude

It is a great pleasure for us to contribute to this symposium dedicated to Masayoshi Tomizuka on the occasion of his sixtieth birthday. The important contributions of Masayoshi Tomizuka to advanced control of mechanical systems have been largely recognized by the control community. In particular he has dedicated a lot of research efforts to "adaptive control" and "repetitive control" (for rejection of periodic disturbances). This paper also discusses an adaptive approach to disturbance rejection but for a different class of disturbances. Both Tomizuka's approach to disturbance rejection and ours share some common grounds. We do expect to explore jointly in the future the connections between the two approaches.

1 Introduction

One of the basic problems in control is the attenuation (rejection) of unknown disturbances without measuring them. The common framework is the assumption that the disturbance is the result of a white noise or a Dirac impulse passed through the "model of the disturbance". While in general one can assume a certain structure for such "model of disturbance", its parameters are unknown and may be time varying. This will require to use an adaptive approach. To be more specific, the disturbances considered can be defined as "finite band disturbances". This includes single or multiple narrow band disturbances or sinusoidal disturbances. Furthermore for robustness reasons the

disturbances should be located in the frequency domain within the regions where the plant has enough gain (see explanation in section 3).

Solutions for this problem, provided that an "image" of the disturbance can be obtained by using an additional transducer, have been proposed by the signal processing community and a number of applications are reported ([?, ?, ?, ?]). However, these solutions (inspired by Widrow's technique for adaptive noise cancellation ([?])) ignore the possibilities offered by feedback control systems and require an additional transducer. The principle of this *signal processing solution* for adaptive rejection of unknown disturbances is illustrated in figure 1, where $E\{y^2\}$ represents the variance of the output y. The basic idea is that a "well located" transducer can provide a measurement, highly correlated with the unknown disturbance. This information is applied to the control input of the plant through an adaptive filter (in general a Finite Impulse Response - FIR) whose parameters are adapted such that the effect of the disturbance upon the output is minimized. The disadvantages of this approach are:

- It requires the use of an additional transducer.
- Difficult choice for the location of this transducer (it is probably the main disadvantage).
- It requires the adaptation of many parameters.

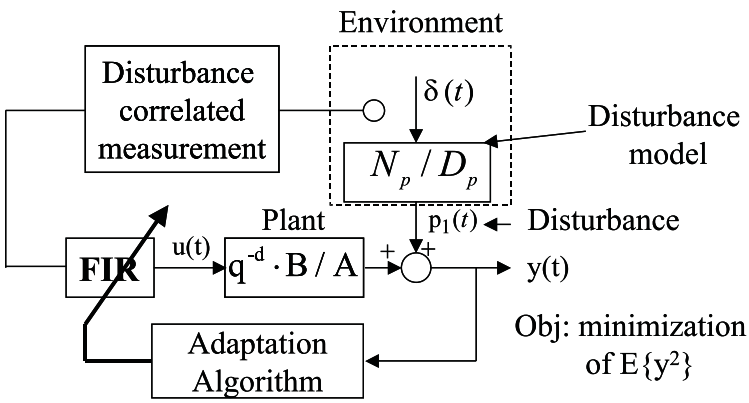

Fig. 1. "Signal processing" approach to rejection of unknown disturbances

To achieve the rejection of the disturbance (at least asymptotically) without measuring it, a *feedback solution* can be considered. As mentioned earlier, the common framework is the assumption that the disturbance is the result of a white noise or a Dirac impulse passed through the "model of the dis-

turbance" [3]. Several problems have been considered within this framework leading to adaptive feedback control solutions:

1. Unknown plant and disturbance models ([**?**]).
2. Unknown plant model and known disturbance ([**?**, **?**]).
3. Known plant and unknown disturbance model ([**?**, **?**, **?**, **?**, **?**, **?**, **?**, **?**, **?**]).

The present paper will focus on the last case, since this is the situation encountered in many applications. Among the various approaches considered for solving this problem, the following ones may be mentioned:

1. Use of the internal model principle ([**?**, **?**, **?**, **?**, **?**, **?**, **?**, **?**, **?**, **?**]).
2. Use of an observer for the disturbance ([**?**, **?**]).
3. Use of the "phase-locked" loop structure considered in communication systems ([**?**, **?**]).

Of course, since the parameters of the disturbance model are unknown, all these approaches lead to an adaptive implementation which can be of *direct* or *indirect* type.

From the user point of view and taking into account the type of operation of existing adaptive disturbance compensation systems one has to consider two modes of operation of the adaptive schemes:

- *Self-tuning* operation (the adaptation procedure starts either on demand or when the performance is unsatisfactory and the current controller is frozen during the estimation/computation of the new controller parameters).
- *Adaptive* operation (the adaptation is performed continuously and the controller is updated at each sampling).

This paper explores the use of the internal model principle for the rejection of unknown time-varying finite band disturbances. The other related approaches will be briefly reviewed in Section 6.

Using the internal model principle, the controller should incorporate the model of the disturbance ([**?**, **?**, **?**, **?**]). Therefore the rejection of unknown disturbances raises the problem of adapting the internal model of the controller and its re-design in real-time.

One way for solving this problem is to try to estimate in real time the model of the disturbance and re-compute the controller, which will incorporate the estimated model of the disturbance (as a pre-specified element of the controller). While the disturbance is unknown and its model needs to be estimated, one assumes that the model of the plant is known (obtained for example by identification). The estimation of the disturbance model can be done by using standard parameter estimation algorithms (see for example [**?**, **?**]). This will lead to an indirect adaptive control scheme. The principle

[3] Throughout the paper it is assumed that the order of the disturbance model is known but the parameters of the model are unknown (the order can be estimated from data if necessary).

of such a scheme is illustrated in figure 2. The time consuming part of this approach is the redesign of the controller at each sampling time. The reason is that in many applications the plant model can be of very high dimension and despite that this model is constant, one has to re-compute the controller because a new internal model should be considered. This approach has been investigated in [**?**, **?**, **?**].

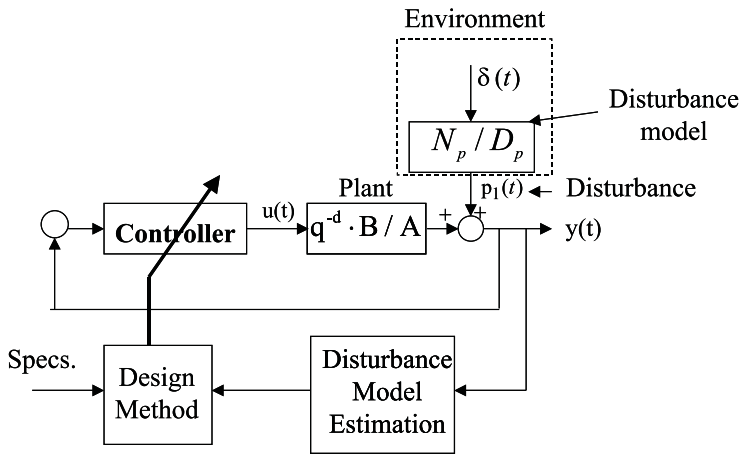

Fig. 2. Indirect adaptive control scheme for rejection of unknown disturbances

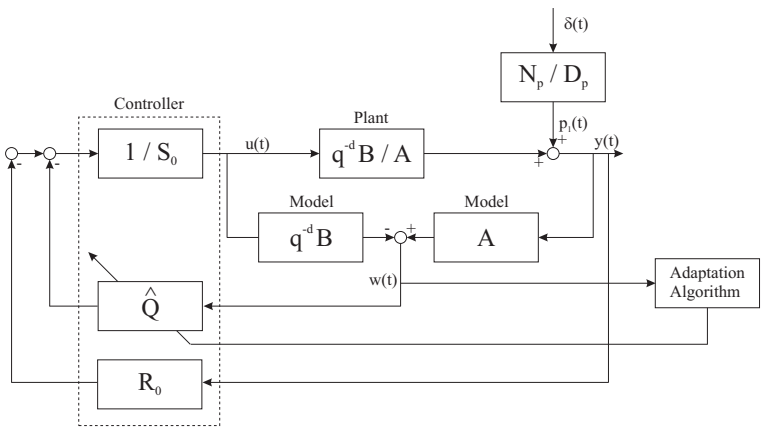

Fig. 3. Direct adaptive control scheme for rejection of unknown disturbances

However, by considering the Youla-Kucera parametrization of the controller (known also as the Q-parametrization), it is possible to insert and

adjust the internal model in the controller by adjusting the parameters of the Q polynomial (see figure 3). It comes out that in the presence of unknown disturbances it is possible to build a direct adaptive control scheme where the parameters of the Q polynomial are directly adapted in order to have the desired internal model without recomputing the controller (polynomials R_0 and S_0 in figure 3 remain unchanged). The number of the controller parameters to be directly adapted is roughly equal to the number of parameters of the denominator of the disturbance model. In other words, the size of the adaptation algorithm will depend upon the complexity of the disturbance model.

This paper focuses on the direct feedback adaptive control for the case of unknown and time-varying frequency narrow band disturbances. The direct adaptive control scheme to be presented([**?**]) takes advantage of the Youla-Kucera parametrization for the computation of the controller. This algorithm takes its roots from an idea of Tsypkin ([**?**])[4]. A similar approach has been considered in [**?**] for an application to a chemical reactor but a theoretical analysis of the scheme is not provided. A related paper is [**?**, **?**] where the application field is the active noise control in an acoustic duct[5]. For evaluation purposes (complexity and performance) an indirect adaptive control scheme based on the Internal Model Principle will be also presented.

The paper is organized as follows. Section 2 is dedicated to a brief review of the plant, disturbance and controller representation as well as of the Internal Model Principle. Some robustness issues are addressed in section 3. The direct and the indirect adaptive control schemes for disturbance rejection are presented in sections 4 and 5, respectively. Other approaches proposed in the literature are discussed in section 6. The active suspension on which the proposed algorithms have been tested, as well as the real-time results obtained are presented in section 7. Some concluding remarks are given in section 8.

2 Plant representation and controller structure

The structure of a linear time invariant discrete time model of the plant (used for controller design) is:

$$G(z^{-1}) = \frac{z^{-d}B(z^{-1})}{A(z^{-1})} = \frac{z^{-d-1}B^*(z^{-1})}{A(z^{-1})} \ , \tag{1}$$

with:

$d =$ the plant pure time delay in number of sampling periods ;
$A = 1 + a_1 z^{-1} + \ldots + a_{n_A} z^{-n_A}$;

[4] Note that the adaptive rejection of unknown disturbances using the Youla-Kucera parametrization is not considered in the survey [**?**].

[5] A brief review of the approaches presented in [**?**] and [**?**, **?**] can be found in section 6.

$$B = b_1 z^{-1} + \ldots + b_{n_B} z^{-n_B} = q^{-1} B^* \ ;$$
$$B^* = b_1 + \ldots + b_{n_B} z^{-n_B+1} \ ,$$

where $A(z^{-1})$, $B(z^{-1})$, $B^*(z^{-1})$ are polynomials in the complex variable z^{-1} and n_A, n_B and $n_B - 1$ represent their orders[6]. The model of the plant may be obtained by system identification. Details on system identification of the models considered in this paper can be found in [**?**, **?**, **?**, **?**, **?**, **?**].

Since in this paper we are focused on regulation, the controller to be designed is a RS-type polynomial controller ([**?**, **?**]) - see also figure 8.

The output of the plant $y(t)$ and the input $u(t)$ may be written as:

$$y(t) = \frac{q^{-d} B(q^{-1})}{A(q^{-1})} \cdot u(t) + p_1(t) \ ; \tag{2}$$
$$S(q^{-1}) \cdot u(t) = -R(q^{-1}) \cdot y(t) \ , \tag{3}$$

where q^{-1} is the delay (shift) operator ($x(t) = q^{-1} x(t+1)$) and $p_1(t)$ is the resulting additive disturbance on the output of the system. $R(z^{-1})$ and $S(z^{-1})$ are polynomials in z^{-1} having the orders n_R and n_S, respectively, with the following expressions:

$$R(z^{-1}) = r_0 + r_1 z^{-1} + \ldots + r_{n_R} z^{-n_R} = R'(z^{-1}) \cdot H_R(z^{-1}) \ ; \tag{4}$$
$$S(z^{-1}) = 1 + s_1 z^{-1} + \ldots + s_{n_S} z^{-n_S} = S'(z^{-1}) \cdot H_S(z^{-1}) \ , \tag{5}$$

where H_R and H_S are pre-specified parts of the controller (used for example to incorporate the internal model of a disturbance or to open the loop at certain frequencies).

We define the following sensitivity functions:

- Output sensitivity function (the transfer function between the disturbance $p_1(t)$ and the output of the system $y(t)$):

$$S_{yp}(z^{-1}) = \frac{A(z^{-1}) S(z^{-1})}{P(z^{-1})} \ ; \tag{6}$$

- Input sensitivity function (the transfer function between the disturbance $p_1(t)$ and the input of the system $u(t)$):

$$S_{up}(z^{-1}) = -\frac{A(z^{-1}) R(z^{-1})}{P(z^{-1})} \ , \tag{7}$$

where

$$\begin{aligned} P(z^{-1}) &= A(z^{-1}) S(z^{-1}) + z^{-d} B(z^{-1}) R(z^{-1}) \\ &= A(z^{-1}) S'(z^{-1}) \cdot H_S(z^{-1}) + z^{-d} B(z^{-1}) R'(z^{-1}) \cdot H_R(z^{-1}) \end{aligned} \tag{8}$$

[6] The complex variable z^{-1} will be used for characterizing the system's behavior in the frequency domain and the delay operator q^{-1} will be used for describing the system's behavior in the time domain.

defines the poles of the closed loop. In pole placement design, $P(z^{-1})$ is the polynomial specifying the desired closed loop poles and the controller polynomials $R(z^{-1})$ and $S(z^{-1})$ are minimal degree solutions of (8) where the degrees of P, R and S are given by: $n_P \leq n_A + n_B + d - 1$, $n_S = n_B + d - 1$ and $n_R = n_A - 1$. Using the equations (2) and (3), one can write the output of the system as:

$$y(t) = \frac{A(q^{-1})S(q^{-1})}{P(q^{-1})} \cdot p_1(t) = S_{yp}(q^{-1}) \cdot p_1(t) \ . \tag{9}$$

For more details on RS-type controllers and sensitivity functions see [**?**].

Suppose that $p_1(t)$ is a deterministic disturbance, so it can be written as

$$p_1(t) = \frac{N_p(q^{-1})}{D_p(q^{-1})} \cdot \delta(t) \ , \tag{10}$$

where $\delta(t)$ is a Dirac impulse and $N_p(z^{-1})$, $D_p(z^{-1})$ are coprime polynomials in z^{-1}, of degrees n_{N_p} and n_{D_p}, respectively. In the case of stationary disturbances the roots of $D_p(z^{-1})$ are on the unit circle. The energy of the disturbance is essentially represented by D_p. The contribution of the terms of N_p is weak compared to the effect of D_p, so one can neglect the effect of N_p.

Internal Model Principle: *The effect of the disturbance given in (10) upon the output:*

$$y(t) = \frac{A(q^{-1})S(q^{-1})}{P(q^{-1})} \cdot \frac{N_p(q^{-1})}{D_p(q^{-1})} \cdot \delta(t) \ , \tag{11}$$

where $D_p(z^{-1})$ is a polynomial with roots on the unit circle and $P(z^{-1})$ is an asymptotically stable polynomial, converges asymptotically towards zero if and only if the polynomial $S(z^{-1})$ in the RS controller has the form:

$$S(z^{-1}) = D_p(z^{-1})S'(z^{-1}) \ . \tag{12}$$

In other terms, the pre-specified part of $S(z^{-1})$ should be chosen as $H_S(z^{-1}) = D_p(z^{-1})$ and the controller is computed using (8), where P, D_p, A, B, H_R and d are given[7].

Using the Youla-Kucera parametrization (Q-parametrization) of all stable controllers ([**?**, **?**]), the controller polynomials $R(z^{-1})$ and $S(z^{-1})$ get the form:

$$R(z^{-1}) = R_0(z^{-1}) + A(z^{-1})Q(z^{-1}) \ ; \tag{13}$$

$$S(z^{-1}) = S_0(z^{-1}) - z^{-d}B(z^{-1})Q(z^{-1}) \ . \tag{14}$$

The (central) controller (R_0, S_0) can be computed by poles placement (but any other design technique can be used). Given the plant model (A, B, d) and the desired closed-loop poles P one has to solve:

[7] Of course it is assumed that D_p and B do not have common factors.

$$P(z^{-1}) = A(z^{-1})S_0(z^{-1}) + z^{-d}B(z^{-1})R_0(z^{-1}) \ . \tag{15}$$

Equations (13) and (14) characterize the set of all stabilizable controllers assigning the closed loop poles as defined by $P(z^{-1})$ (it can be verified by simple calculations that the poles of the closed loop remain unchanged). For the purpose of this paper $Q(z^{-1})$ is considered to be a polynomial of the form:

$$Q(z^{-1}) = q_0 + q_1 z^{-1} + \ldots + q_{n_Q} z^{-n_Q} \ . \tag{16}$$

To compute $Q(z^{-1})$ in order that the controller incorporates the internal model of the disturbance one has to solve the diophantine equation:

$$S'(z^{-1})D_p(z^{-1}) + z^{-d}B(z^{-1})Q(z^{-1}) = S_0(z^{-1}) \ , \tag{17}$$

where $D_p(z^{-1})$, d, $B(z^{-1})$ and $S_0(z^{-1})$ are known and $S'(z^{-1})$ and $Q(z^{-1})$ are unknown. Equation (17) has a unique solution for $S'(z^{-1})$ et $Q(z^{-1})$ with: $n_{S_0} \leq n_{D_p} + n_B + d - 1$, $n_{S'} = n_B + d - 1$, $n_Q = n_{D_p} - 1$. One sees that the order n_Q of the polynomial Q depends upon the structure of the disturbance model.

3 Robustness considerations

As it is well known, the introduction of the internal model for the perfect rejection of the disturbance (asymptotically) will have as effect to raise the maximum value of the modulus of the output sensitivity function S_{yp}. This may lead to unacceptable values for the modulus and the delay margins if the controller design is not appropriately done (see [**?**]). As a consequence, a robust control design should be considered assuming that the model of the disturbance is known, in order to be sure that for all situations an acceptable modulus margin and delay margin are obtained.

On the other hand at the frequencies where perfect rejection of the disturbance is achieved one has $S_{yp}(e^{-j\omega}) = 0$ and

$$\left|S_{up}(e^{-j\omega})\right| = \left|\frac{A(e^{-j\omega})}{B(e^{-j\omega})}\right| \ . \tag{18}$$

Equation (18) corresponds to the inverse of the gain of the system to be controlled. The implication of equation (18) is that cancellation (or in general an important attenuation) of disturbances on the output should be done only in frequency regions where the system gain is large enough. If the gain of the controlled system is too low, $|S_{up}|$ will be large at these frequencies. Therefore, the robustness vs additive plant model uncertainties will be reduced and the stress on the actuator will become important. Equation (18) also implies that serious problems will occur if $B(z^{-1})$ has complex zeros close to the unit circle (stable or unstable zeros) at frequencies where an important attenuation of

disturbances is required. It is mandatory to avoid attenuation of disturbances at these frequencies.

Since on one hand we would not like to react to very high frequency disturbances and on the other hand we would like to have a good robustness it is often wise to open the loop at $0.5f_s$ (f_s is the sampling frequency) by introducing a fixed part in the controller $H_R(q^{-1}) = 1 + q^{-1}$ (for details see [**?**] and section 2).

4 Direct adaptive control for disturbance attenuation

The objective is to find an estimation algorithm which will directly estimate the parameters of the internal model in the controller in the presence of an unknown disturbance (but of known structure) without modifying the closed loop poles. Clearly, the Q-parametrization is a potential option since modifications of the Q polynomial will not affect the closed loop poles. In order to build an estimation algorithm it is necessary to define an *error equation* which will reflect the difference between the optimal Q polynomial and its current value.

In [**?**], such an error equation is provided and it can be used for developing a direct adaptive control scheme. This idea has been used in [**?**, **?**, **?**, **?**]. Using the Q-parametrization, the output of the system in the presence of a disturbance can be expressed as:

$$\begin{aligned} y(t) &= \frac{A(q^{-1})[S_0(q^{-1}) - q^{-d}B(q^{-1})Q(q^{-1})]}{P(q^{-1})} \cdot \frac{N_p(q^{-1})}{D_p(q^{-1})} \cdot \delta(t) \\ &= \frac{S_0(q^{-1}) - q^{-d}B(q^{-1})Q(q^{-1})}{P(q^{-1})} \cdot w(t) \ , \end{aligned} \tag{19}$$

where w(t) is given by (see also figure 3):

$$w(t) = \frac{A(q^{-1})N_p(q^{-1})}{D_p(q^{-1})} \cdot \delta(t) = A(q^{-1}) \cdot y(t) - q^{-d} \cdot B(q^{-1}) \cdot u(t) \ . \tag{20}$$

In the time domain, the internal model principle can be interpreted as finding Q such that asymptotically $y(t)$ becomes zero. Assume that one has an estimation of $Q(q^{-1})$ at instant t, denoted $\hat{Q}(t, q^{-1})$. Define $\varepsilon^0(t+1)$ as the value of $y(t+1)$ obtained with $\hat{Q}(t, q^{-1})$. Using (19) one gets:

$$\varepsilon^0(t+1) = \frac{S_0(q^{-1})}{P(q^{-1})} \cdot w(t+1) - \frac{q^{-d}B^*(q^{-1})}{P(q^{-1})}\hat{Q}(t, q^{-1}) \cdot w(t) \ . \tag{21}$$

One can define now the *a posteriori* error (using $\hat{Q}(t+1, q^{-1})$) as:

$$\varepsilon(t+1) = \frac{S_0(q^{-1})}{P(q^{-1})} \cdot w(t+1) - \frac{q^{-d}B^*(q^{-1})}{P(q^{-1})}\hat{Q}(t+1, q^{-1}) \cdot w(t) \ . \tag{22}$$

Replacing $S_0(q^{-1})$ from the last equation by (17) one obtains

$$\varepsilon(t+1) = [Q(q^{-1}) - \hat{Q}(t+1, q^{-1})] \cdot \frac{q^{-d}B^*(q^{-1})}{P(q^{-1})} \cdot w(t) + v(t+1) \ , \quad (23)$$

where

$$v(t) = \frac{S'(q^{-1})D_p(q^{-1})}{P(q^{-1})} \cdot w(t) = \frac{S'(q^{-1})A(q^{-1})N_p(q^{-1})}{P(q^{-1})} \cdot \delta(t)$$

is a signal which tends asymptotically towards zero.

Define the estimated polynomial $\hat{Q}(t, q^{-1})$ as: $\hat{Q}(t, q^{-1}) = \hat{q}_0(t) + \hat{q}_1(t)q^{-1} + \ldots + \hat{q}_{n_Q}(t)q^{-n_Q}$ and the associated estimated parameter vector : $\hat{\theta}(t) = [\hat{q}_0(t)\, \hat{q}_1(t) \ldots \hat{q}_{n_Q}(t)]^T$. Define the fixed parameter vector corresponding to the optimal value of the polynomial Q as: $\theta = [q_0\, q_1 \ldots q_{n_Q}]^T$. Denote:

$$w_2(t) = \frac{q^{-d}B^*(q^{-1})}{P(q^{-1})} \cdot w(t) \quad (24)$$

and define the following observation vector:

$$\phi^T(t) = [w_2(t) \quad w_2(t-1) \ \ldots \ w_2(t-n_Q)] \ . \quad (25)$$

Equation (23) becomes

$$\varepsilon(t+1) = [\theta^T - \hat{\theta}^T(t+1)] \cdot \phi(t) + v(t+1) \ . \quad (26)$$

One can remark that $\varepsilon(t)$ corresponds to an adaptation error ([**?**]).

From equation (21) one obtains the *a priori* adaptation error:

$$\varepsilon^0(t+1) = w_1(t+1) - \hat{\theta}^T(t)\phi(t) \ ,$$

with

$$w_1(t+1) = \frac{S_0(q^{-1})}{P(q^{-1})} \cdot w(t+1) \ ; \quad (27)$$

$$w_2(t) = \frac{q^{-d}B^*(q^{-1})}{P(q^{-1})} \cdot w(t) \ ; \quad (28)$$

$$w(t+1) = A(q^{-1}) \cdot y(t+1) - q^{-d}B^*(q^{-1}) \cdot u(t) \ , \quad (29)$$

where $B(q^{-1})u(t+1) = B^*(q^{-1})u(t)$.

The *a posteriori* adaptation error is obtained from (22):

$$\varepsilon(t+1) = w_1(t+1) - \hat{\theta}^T(t+1)\phi(t) \ .$$

For the estimation of the parameters of $\hat{Q}(t, q^{-1})$ the following parameter adaptation algorithm is used ([**?**]):

$$\hat{\theta}(t+1) = \hat{\theta}(t) + F(t)\phi(t)\varepsilon(t+1) \ ; \tag{30}$$

$$\varepsilon(t+1) = \frac{\varepsilon^0(t+1)}{1+\phi^T(t)F(t)\phi(t)} \ ; \tag{31}$$

$$\varepsilon^0(t+1) = w_1(t+1) - \hat{\theta}^T(t)\phi(t) \ ; \tag{32}$$

$$F(t+1) = \frac{1}{\lambda_1(t)}\left[F(t) - \frac{F(t)\phi(t)\phi^T(t)F(t)}{\frac{\lambda_1(t)}{C)} + \phi^T(t)F(t)\phi(t)}\right] \ . \tag{33}$$

$$1 \geq \lambda_1(t) > 0; 0 \leq \lambda_2(t) < 2 \tag{34}$$

where $\lambda_1(t), \lambda_2(t)$ allow to obtain various profiles for the evolution of the adaption gain $F(t)$ (for details see [**?**, **?**] and section 7).

In order to implement this methodology for disturbance rejection (see figure 3), it is supposed that the plant model $\frac{z^{-d}B(z^{-1})}{A(z^{-1})}$ is known (identified) and that it exists a controller $[R_0(z^{-1}), S_0(z^{-1})]$ which verifies the desired specifications in the absence of the disturbance. One also supposes that the degree n_Q of the polynomial $Q(z^{-1})$ is fixed, $n_Q = n_{D_p} - 1$, i.e. the structure of the disturbance is known.

The following procedure is applied at each sampling time for *adaptive* operation:

1. Get the measured output $y(t+1)$ and the applied control $u(t)$ to compute $w(t+1)$ using (29).
2. Compute $w_1(t+1)$ and $w_2(t)$ using (27) and (28) with P given by (15).
3. Estimate the Q-polynomial using the parametric adaptation algorithm (30) - (33).
4. Compute and apply the control (see figure 3):

$$S_0(q^{-1}) \cdot u(t+1) = -R_0(q^{-1}) \cdot y(t+1) - \hat{Q}(t, q^{-1}) \cdot w(t+1) \ . \tag{35}$$

For the *self tuning* operation of the adaptive scheme, the estimation of the Q- polynomial starts once the level of the output is over a defined threshold. A parameter adaptation algorithm (30)-(33) with *decreasing adaption gain* is used and the estimation is stopped when the adaption gain is below a prespecified level[8]. During estimation of the new parameters, the controller is kept constant. The controller is updated once the estimation phase is finished. For a stability analysis of this scheme see [**?**].

5 Indirect adaptive control for disturbance attenuation

The methodology proposed in this section concerns the indirect adaptive control for the attenuation of unknown disturbances and consists in two steps: (1)

[8] The magnitude of the adaptation gain gives an indication upon the variance of the parameter estimation error - see for example [**?**].

Identification of the disturbance model; (2) Computation of a digital controller using the identified disturbance model.

The disturbance is considered as a stationary signal having a rational spectrum. As such it may be considered as the output of a filter with the transfer function $N_p(z^{-1})/D_p(z^{-1})$ and a white noise as input:

$$D_p(q^{-1}) \cdot y(t) = N_p(q^{-1}) \cdot e(t) \text{ or } y(t) = \frac{N_p(q^{-1})}{D_p(q^{-1})} \cdot e(t) \ , \tag{36}$$

where $e(t)$ represents a gaussian white noise, and

$$N_p(z^{-1}) = 1 + n_{p_1} z^{-1} + \ldots + n_{p_{n_{N_p}}} z^{-n_{N_p}} = 1 + z^{-1} N_p^*(z^{-1}) \ ;$$
$$D_p(z^{-1}) = 1 + d_{p_1} z^{-1} + \ldots + d_{p_{n_{D_p}}} z^{-n_{D_p}} = 1 + z^{-1} D_p^*(z^{-1}) \ .$$

Therefore the disturbance model can be represented by an ARMA model. As we deal with narrow band disturbances, the filtering effect of the primary path in cascade with the output sensitivity function (when operating in closed loop) around the central frequency of the disturbance can be approximated by a gain and a phase lag which will be captured by the $\dfrac{N_p(z^{-1})}{D_p(z^{-1})}$ model.

From equation (36) one obtains:

$$y(t+1) = -\sum_{i=1}^{n_{D_p}} d_{p_i} y(t-i+1) + \sum_{i=1}^{n_{N_p}} n_{p_i} e(t-i+1) + e(t+1) \ . \tag{37}$$

The problem is, in fact, an on-line adaptive estimation of parameters in presence of noise ([**?**, **?**]). Equation (37) is a particular case of identification of an ARMAX model. One can use for example the *Recursive Extended Least Squares* method ([**?**, **?**]), which is dedicated to the identification of this type of model. The parameter adaptation algorithm given in (30) - (33) is used. The controller parameters are frozen while the disturbance model is identified. Once the disturbance model is identified, the controller containing the disturbance dynamics is computed by solving the diophantine equation (8) and using (5) with $H_S(z^{-1}) = \hat{D}_p(z^{-1})$ (the identified model of the disturbance). In order to apply this methodology we suppose that the plant model is known (can be obtained by identification). We also suppose that the degrees n_{N_p} and n_{D_p} of $N_p(z^{-1})$ respectively $D_p(z^{-1})$ are fixed.

For the *self tuning* operation a parameter adaptation algorithm with *decreasing adaptation gain* is used and estimation is stopped when the adaptation gain becomes smaller than a pre-specified level. In *adaptive* operation, a parameter adaption algorithm with constant trace or forgetting factor is used. The parameters of the controller have to be re-computed at each sampling instant based on the current estimation of the disturbance model (non vanishing adaptation gain). Unfortunately, when the estimated frequency approaches the true one, the output sensitivity function will have a pair of complex zeros

on the unit circle leading to a very strong attenuation of the measured effect of the disturbance. This will make the estimation of the exact frequency almost impossible. As a consequence, in *adaptive* operation there will be a "bias" on the estimated frequency caused by the need to have a certain level of the measured output to carry on the estimation. This phenomenon has been clearly observed both in simulation and on the real system.[9] For more details see([**?**, **?**, **?**]).

To compute the controller one uses equation 8. If a Youla-Kucera parametrization of the controller is used one will have to solve equation 17. The advantage with respect to the first approach is a reduction of the size of the equation to be solved in real time.

6 Review of other approaches

Several approaches based on adaptive feedback control have been considered in the literature for the rejection of unknown disturbances when the plant model is known, . Some of them are based on the internal model principle (as the approach presented in this paper). See for example, [**?**, **?**, **?**]. Other approaches are based on the use of adaptive observers for the disturbances, such as the ones presented in [**?**, **?**]. Another approach uses the phase-locked loop structures, like in [**?**, **?**]. In what follows we will briefly review these results.

Use of the Internal Model Principle

Feedback solutions for the rejection (attenuation) of unknown disturbances, based on the internal model principle, have been also presented in [**?**, **?**, **?**] (the model of the plant is considered known). The adaptive approach presented in these papers is similar to the one presented in this paper.

Approach I. In [**?**] an adaptive controller design approach based on parametrizing the set of stabilizing controllers using the Youla - Kucera parametrization and the internal model principle is implemented to solve a noise cancellation problem in an acoustic duct. The design approach is presented in [**?**],

The plant considered is presented in figure 4. It consists of a duct, a pair of speakers, a pair of microphones and their amplifiers, and an anti-aliasing filter. The first speaker is used to generate the noise signal, the second one is used to generate the control signal to cancel the noise at a particular location in the duct (disturbance and control speakers). The two microphones are used as measurement and performance evaluation.

The model of the plant has been obtained by system identification. The identification experiment was performed by first exciting the disturbance

[9] One can use other signals for disturbance estimation in order to avoid this problem. One possibility is to replace the signal $y(t)$ by $\bar{y}(t) = y(t) - \frac{q^{-d}B}{A}u(t)$.

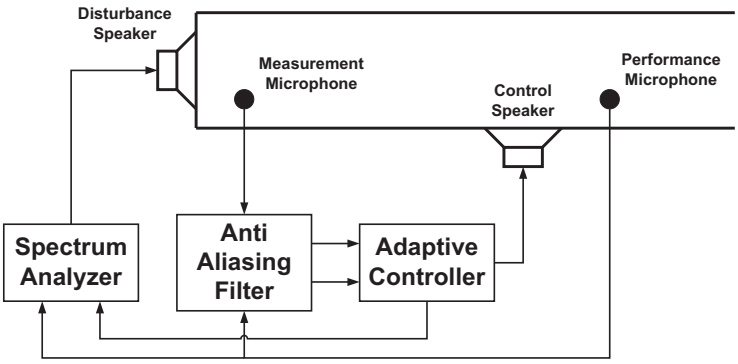

Fig. 4. Block diagram of the noise cancellation system

speaker with white noise and collecting data from the output of the anti-aliasing filter. The same identification procedure was repeated for the control speaker. A spectrum analyzer provided the frequency response of the plant based on the collected data.

The experiment considered consists of exciting the disturbance speaker with a single tone sinusoidal signal and running the adaptive controller in order to cancel the noise at the performance microphone. The Youla - Kucera filter to be adjusted online is a first order FIR filter.

The experimental results show a mixed performance for the adaptive systems with good performance only in certain disturbance frequency ranges. At some ranges of the disturbance frequency, the adaptive systems achieved 20 to 50 dB reduction in the performance signal PSD (Power Spectral Density) at the disturbance frequency and also good overall reduction in the PSD of the signal. At some other disturbance frequency ranges, the performance was not as good. It has been concluded that the unmodeled plant nonlinearities are most likely to be responsible for the observed deterioration of the adaptive system performance in experiments as compared to simulations.

Approach II. An algorithm very similar to the one presented in this paper and based on the adaptive feedback control for disturbance rejection is presented in [**?**].

The application considered to illustrate the performances of the proposed algorithm is the *Saccharomyces cerevisiae* fed-batch fermentation. It is an example of a system subject to an unstable disturbance (but over a finite time).

The objective of the application was to maximize the biomass productivity in the reactor. Hence, the substrate concentration in the reactor needs to be kept at the critical value in order to maintain a constant ethanol concentration. However, the substrate concentration is unknown a priori and may change from experiment to experiment.

So the problem of maximizing the production of biomass is converted into that of regulating the concentration of ethanol. The plant is considered as an integrator that constantly produces ethanol. The substrate consumption by the cells is modeled as an exponential disturbance which the controller has to reject. The methodology has been successfully implemented in an experimental setup in the laboratory. So the control objective is to keep the concentration of this fermentation product constant.

The control strategy is presented in figure 5. The controller C generates the substrate feed rate F that is capable of maintaining exponential cell growth and the desired production of ethanol. The controller will be able to reject the exponential substrate consumption disturbance w, if the rate at which the substrate is supplied is sufficient. Since the cells grow exponentially, it is expected that the substrate feed rate also be exponential. An adaptive disturbance rejection methodology is used to control the fed-batch fermentation near its optimal operating point. The biomass and ethanol productions rates have been decoupled, as it can be seen in figure 5, where G_w relates the rate of substrate oxidation reaction to the rate at which the substrate is fed (the discrete transfer function of the disturbance) and G_p relates the substrate feed rate to the ethanol production rate. S and P are the concentrations of the substrate and ethanol, respectively, and P_{sp} is the ethanol concentration setpoint.

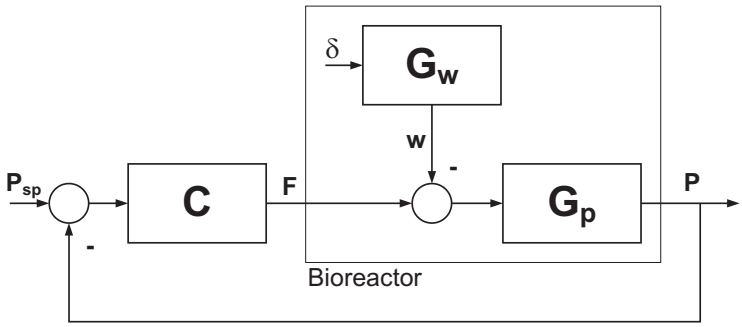

Fig. 5. Control strategy of the fed-batch fermenter

The derived linear models have been used successfully to implement the adaptive disturbance rejection methodology. The ethanol concentration in the bioreactor is the only measurement required. The only parameter that is estimated on-line is the exponential cell growth rate. Changes in the disturbance structure are automatically compensated.

Use of Adaptive Observers

The design of an output feedback adaptive observer-based compensator for the rejection of additive noisy sinusoidal disturbances with unknown bias,

magnitude, phase and frequency is presented in [**?**]. In this approach the system is considered asymptotically stable, linear and observable, its parameters being supposed known. For a system of order n, the order of the compensator generating asymptotically convergent estimates of the biased sinusoidal disturbance is $2n + 6$. The estimated parameters of the sinusoidal disturbance are its magnitude, frequency (with known lower bound), phase and bias. It is shown that the closed-loop error system based on adaptive observer is globally asymptotically stable. The adaptive observer-based compensation technique presented in [**?**] is illustrated on an example taken from [**?**]. In order to test the robustness of the control strategy, a more general disturbance has been considered, compared to the disturbance considered in [**?**]. Hence, bias and additional unmodeled noise have been taken into account, neither of them being considered in [**?**]. The performance in simulation are interesting. While this scheme does not directly make reference to the "internal model principle", one can however remark that through the observer the model of the disturbance is incorporated in the controller.

An extension of the above approach with explicit reference to the internal model principle for the case of nonlinear plants is discussed in [**?**].

Use of the Phase-Locked Loop Structure

A direct approach for the rejection of sinusoidal disturbances with unknown frequencies, based on the integration of a phase-locked loop for adaptive feedback control with known plant model is presented in [**?**]. The disturbance frequency estimation and the disturbance cancellation are performed simultaneously using a single error signal. The elimination of the high-frequency components within the system is done by using a low-pass compensator, no additional filtering being necessary. The knowledge of the frequency response of the plant in the frequency range of interest is required. Because of the lock-in range of the phase-locked loops, there exist an upper limit on the initial errors of the disturbance frequencies. The system presented in [**?**] is able to compensate sinusoidal disturbances in a range $\pm 30\%$. Experimental results are mentionned in [**?**]. An applicable scheme of this type would need to combine the direct algorithm with an initialization scheme for providing rough initial estimates of the disturbance frequency.

7 An application - Adaptive rejection of narrow band disturbances on an active suspension

7.1 The active suspension

The structure of the system (the active suspension) used in this paper is presented in figure 6. Two photos of the system are presented in figure 7 (Courtesy of Hutchinson Research Center and Laboratoire d'Automatique

de Grenoble). It consists of the active suspension, a load, a shaker and the components of the control scheme. The mechanical construction of the load is such that the vibrations produced by the shaker, fixed to the ground, are transmitted to the upper side of the active suspension. The active suspension is based on a hydraulic system allowing to reduce the over-pressure at the frequencies of the vibration modes of the suspension. Its components are: an elastomer cone (1) which marks the main chamber filled up with silicon oil, a secondary chamber (2) marked by a flexible membrane, a piston (3) attached to a motor, an orifice (4) allowing the oil to pass between the two chambers and a force sensor located between the support and the active suspension.

The controller will act upon the piston (through a power amplifier) in order to reduce the residual force. The sampling frequency is $800Hz$. The equivalent control scheme is shown in figure 8. The system input, $u(t)$ is the position of the piston (see figures 6, 8), the output $y(t)$ is the residual force measured by a force sensor. The transfer function ($q^{-d_1}\dfrac{C}{D}$), between the disturbance force, u_p, and the residual force $y(t)$ is called *primary path*. In our case (for testing purposes), the primary force is generated by a shaker controlled by a signal given by the computer. The plant transfer function ($q^{-d}\dfrac{B}{A}$) between the input of the system, $u(t)$, and the residual force is called *secondary path*. The input of the system being a position and the output a force, the secondary path transfer function has a double differentiator behavior.

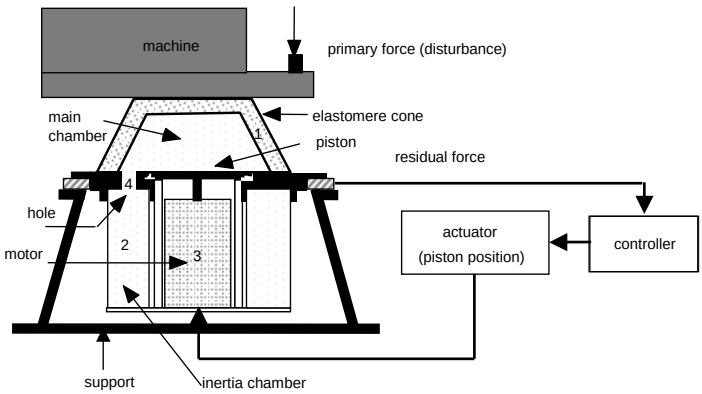

Fig. 6. Active suspension system (scheme)

The control objective is to reject the effect of unknown narrow band disturbances on the output of the system (residual force), i.e. to attenuate the vibrations transmitted from the machine to the support via the active suspension. The physical parameters of the active suspension system are not

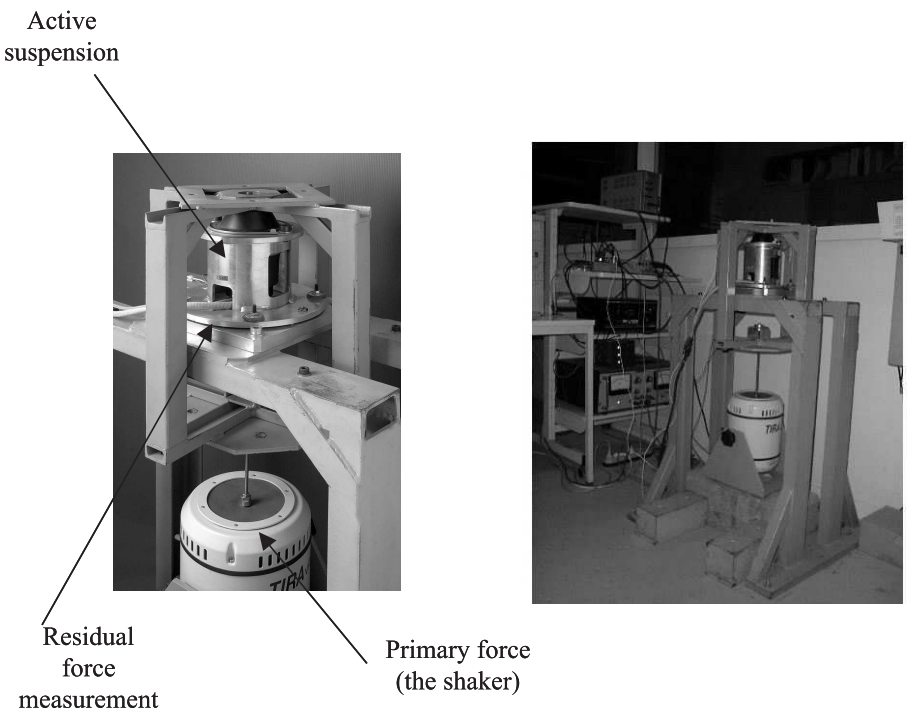

Fig. 7. Active suspension system (photo)

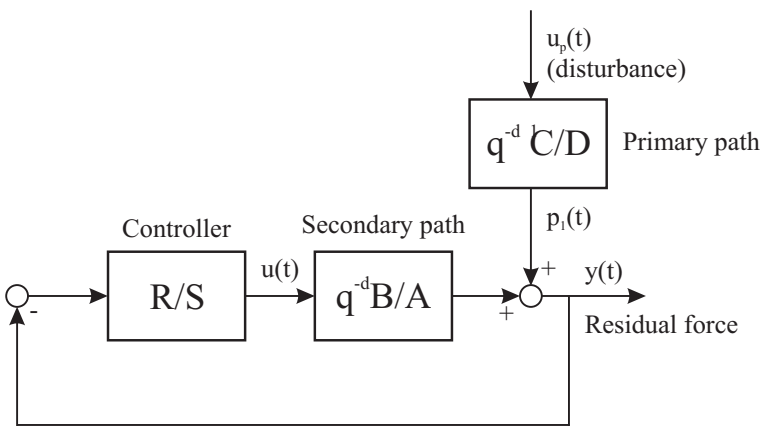

Fig. 8. Block diagram of the active suspension system

provided by the manufacturer. The system has to be considered as a "black box".

7.2 Results obtained on the active suspension

The narrow band disturbance rejection procedure using the direct adaptive control scheme proposed in section 4 is illustrated in real time for the case of the control of the active suspension (presented in section 7.1). In our case the disturbance will be a time-varying frequency sinusoid, so we shall consider $n_{D_p} = 2$ and $n_Q = n_{D_p} - 1 = 1$. Furthermore a comparison with the results obtained in real time with the indirect adaptive control scheme proposed in section 5 will be provided.

The identification procedure in open and closed-loop operation for the active suspension is discussed in detail in [**?**, **?**, **?**, **?**, **?**]. The frequency characteristic of the identified primary path model (open-loop identification), between the signal u_p sent to the shaker in order to generate the disturbance and the residual force $y(t)$, is presented in figure 9. The first vibration mode of the primary path model is near $32Hz$. The frequency characteristic of the iden-

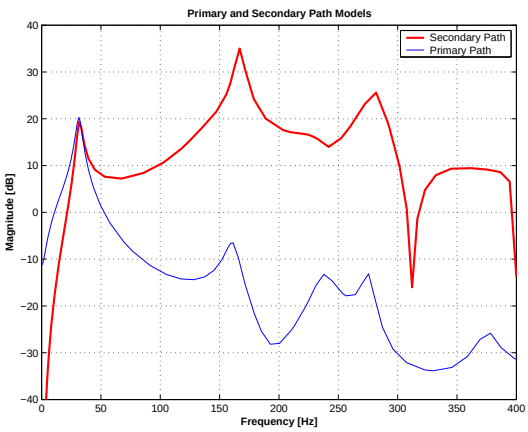

Fig. 9. Frequency characteristics of the primary and secondary paths

tified secondary path model (closed-loop identification), is presented also in figure 9. This model has the following complexity: $n_B = 14$, $n_A = 16$, $d = 0$. The identification has been done using as excitation of the piston a PRBS (Pseudo Random Binary Sequence) with frequency divider $p = 4$ (for details on the PRBS signals see [**?**]). There exist several very low damped vibration modes on the secondary path, the first one being at $31.8Hz$ with a damping factor 0.07. The identified model of the secondary path has been used for the design and implementation of the controller.

The central controller (without the internal model of the disturbance) has been designed using the pole placement method and the secondary path identified model. A pair of dominant poles has been fixed at the frequency of the first vibration mode ($31.8Hz$), with a damping $\xi = 0.8$, and the other poles of the model have been considered as auxiliary desired closed loop poles. In addition a pre-specified part $H_R = 1 + q^{-1}(R = H_R R')$ which assures the opening of the loop at $0.5f_s$ has been introduced and 10 auxiliary poles at 0.7 have been added to the desired closed-loop poles. The resulting nominal controller has the following complexity: $n_R = 14$, $n_S = 16$ and it satisfies the imposed robustness constraints on the sensitivity functions(for the design methodology see[**?**])[10].

In order to evaluate the performances of direct and indirect methods in real time, time-varying frequency sinusoidal disturbances between 25 and $47Hz$ have been used (the first vibration mode of the primary path is near $32Hz$).

For both direct and indirect adaptive control methods, two protocols have been defined: one for a *self-tuning* operation, the other for an *adaptive* operation.

- *Protocol 1 : Self-tuning operation*
  The system operates in closed loop with a frozen controller. As soon as a change of the disturbance is detected (by measuring the variance of the residual output), the estimation algorithm is started with the last frozen controller in operation. When the algorithm converges (a criterion has to be defined - see below), a new controller is computed and applied to the system. The adaptation algorithm is stopped and one waits for a change of frequency.
- *Protocol 2 : Adaptive operation*
  The estimation algorithm works permanently (once the loop is closed) and the controller is recomputed at each sampling. The adaptation gain in this case does not tend asymptotically to zero.
- *Start up*: For comparison purpose the system is started in open-loop for both protocols. After 5 seconds (4000 samples) a sinusoidal disturbance of $32Hz$ is applied on the shaker. The model of the disturbance is estimated and an initial controller is computed (same initial controller for both direct and indirect adaptive control). In the case of the self-tuning operation the adaptation algorithm is stopped while in the case of the adaptive operation the adaptation algorithm continues to be active.

After the *start up* ends, every 15 seconds (8000 samples) sinusoidal disturbances of different frequency are applied (32Hz, 25Hz,32Hz,47Hz,32Hz).

Protocol 1 : Self-tuning operation. Real time experimental results

The measured residual force obtained in self-tuning operation with the direct adaptation method is presented in figure 10 and with the indirect adaptation

[10] Any design method allowing to satisfy these constraints can be used.

method in figure 11 . We note in general a faster convergence speed of the direct adaptive control scheme compared to the indirect one (except for 47Hz).

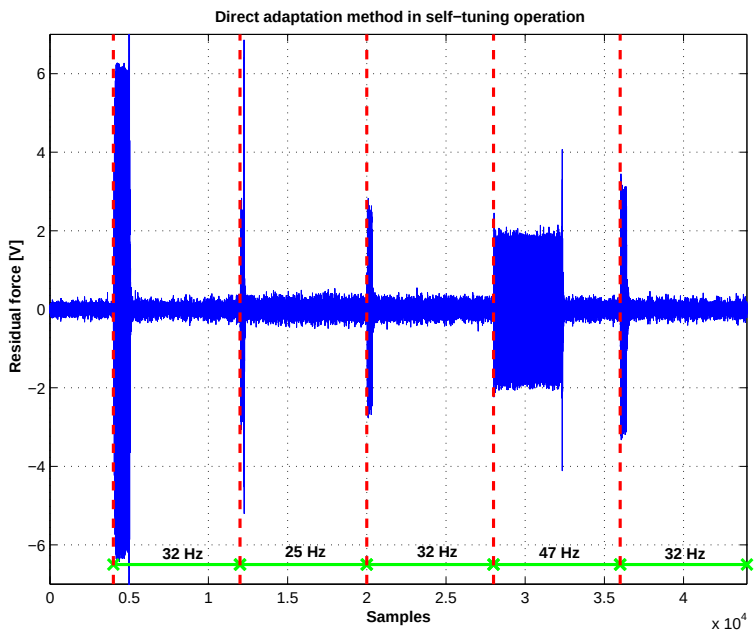

Fig. 10. Time domain results with the direct adaptation method in self-tuning operation

For the self-tuning protocol, the spectral densities of the residual force obtained in open and in closed loop, respectively, using the direct adaptation scheme (after the algorithm converges) are presented in figure 12. The results are given for the three frequencies used: 25, 32 and 47 Hz. We remark that the attenuations are larger than 49 dB for all the frequencies. Similar results are obtained with the indirect adaptation algorithm. For details see [**?**].

We note the appearance of two harmonics of the first vibration mode of the primary path on the spectral density in open loop when the frequency of the disturbance corresponds with the first resonance mode of the system (32 Hz). They appear in open loop because of the non-linearities of the system at large signals (there is an important amplification of the disturbance at the resonance frequency of the system in open loop). The harmonics do not appear in closed loop operation.

In *self-tuning* operation, one uses an adaptation gain $F(t)$ with *variable forgetting factor*, with $\lambda_0 = 0.97$ and the initial forgetting factor $\lambda_1(0) = 0.97$ (the forgetting factor is given by $\lambda_1(t) = \lambda_0\lambda_1(t-1)+1-\lambda_0$, with $0 < \lambda_0 < 1$).

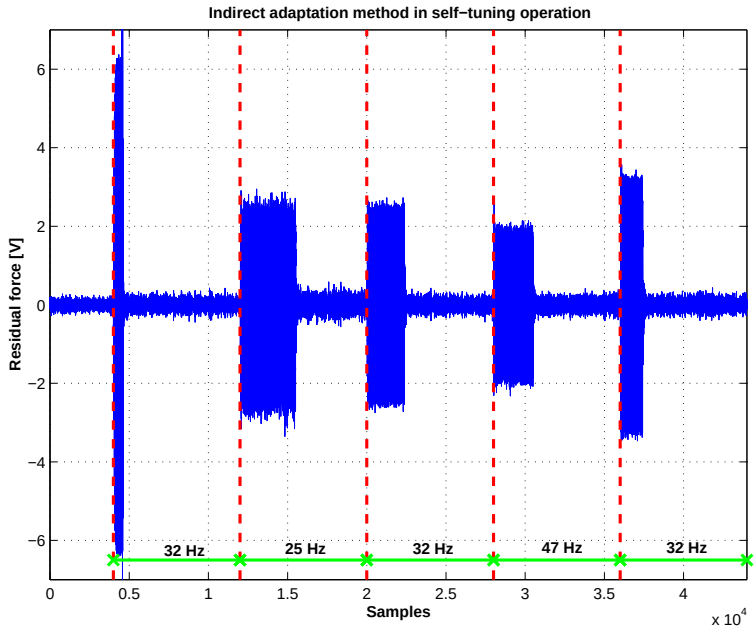

Fig. 11. Time domain results with the indirect adaptation method in self-tuning operation

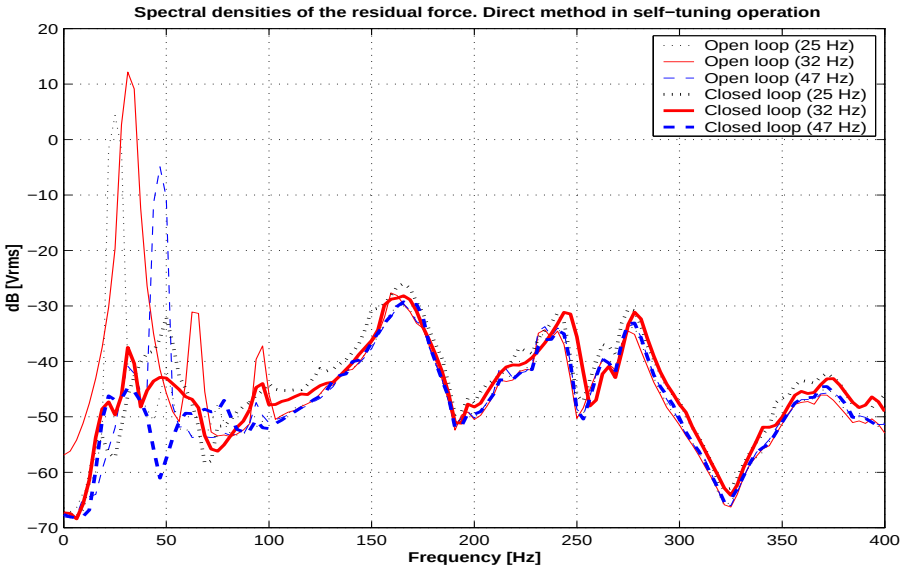

Fig. 12. Spectral densities of the residual force in open and in closed loop, with the direct adaptation method in self-tuning operation

For the *variable forgetting factor* the adaptation gain tends asymptotically towards zero. The convergence criterion has been fixed as a threshold on the trace value of the adaptation gain matrix. For details see [**?**].

The detection of a change of frequency is done using the variance of the measured residual force computed on a sliding window of 50 samples.

Protocol 2 : Adaptive operation. Real time experimental results

The measured residual force obtained in adaptive operation is presented in figure 13 for the direct adaptation method and in figure 14 for the indirect adaptation method. An adaptation gain with *variable forgetting factor combined with a constant trace* ([**?**, **?**]) has been used in order to be able to track automatically the changes of disturbance characteristics. The low level threshold of the trace has been fixed at $3{\cdot}10^{-9}$ for the direct algorithm and at $5{\cdot}10^{-7}$ for the indirect one (note that in the indirect adaptive scheme there are more parameters to estimate than in the direct adaptive scheme). The attenuation obtained with the indirect adaptive scheme in adaptive operation is less good than in the self tuning operation and less good than the one obtained with the direct adaptive scheme. This is certainly caused by the phenomenon discussed in section 5. We note that the direct adaptive control scheme in adaptive operation gives better results than in self tuning operation (compare figures 10 and 13).

The spectral densities of the residual force for the direct adaptive scheme (after the algorithm converges) are similar with those obtained in *self-tuning* operation (see [**?**]).

According to the real time results presented above, one can conclude that the direct adaptive control scheme gives better results than the indirect adaptive control scheme, from the point of view of the convergence speed and performance. In addition the direct adaptation scheme is much simpler than the indirect one in terms of number of operations.

Direct adaptive control scheme under the effect of sinusoidal disturbances with continuously time varying frequency

Consider now that the frequency of the sinusoidal disturbance varies continuously and let's use a chirp disturbance signal (linear swept-frequency signal) between 25 and $47Hz$. The tests have been done as follows: Start up in closed loop at $t = 0$ with the central controller. Once the loop is closed, the adaptation algorithm works permanently and the controller is updated (direct approach) at each sampling instant. After 5 seconds a sinusoidal disturbance of 25 Hz (constant frequency) is applied on the shaker. From 10 to 15 seconds a chirp between 25 and 47 Hz is applied. After 15 seconds a 47 Hz (constant frequency) sinusoidal disturbance is applied and the tests are stopped after 18 seconds. The time-domain results obtained in open and in closed-loop (direct adaptive control) are presented in figure 15. We can remark that the performances obtained are very good.

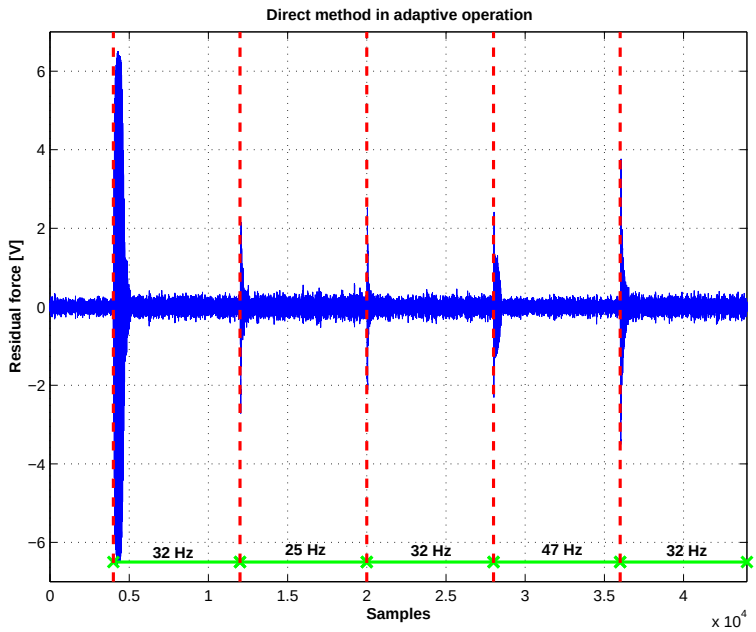

Fig. 13. Time domain results with the direct adaptation method in the adaptive case (trace $= 3 \cdot 10^{-9}$)

Adaptation transients for direct adaptive control

Figure 16 illustrates the adaptation transients on the input and output when a step change of the frequency of the disturbance occurs from 20Hz to 32 Hz respectively. One notes that the convergence of the output requires less than $0.25s$ This corresponds roughly to 6 periods for 32Hz. Same duration of the adaptation transient are obtained for the other frequencies step changes. These results have to be compared with the transients results given in [**?**, **?**, **?**, **?**].

8 Conclusions

It was shown in this paper that the use of the internal model principle combined with the adaptation of the internal model implemented in a Youla - Kucera parametrized controller allows a very good rejection of the unknown time varying narrow band disturbances without requiring the use of an additional transducer. Two adaptive approaches (direct and indirect adaptation) have been presented and tested comparatively on an active suspension.

The results obtained in real time lead us to conclude that the direct adaptive control scheme provides better performance than the indirect adaptive

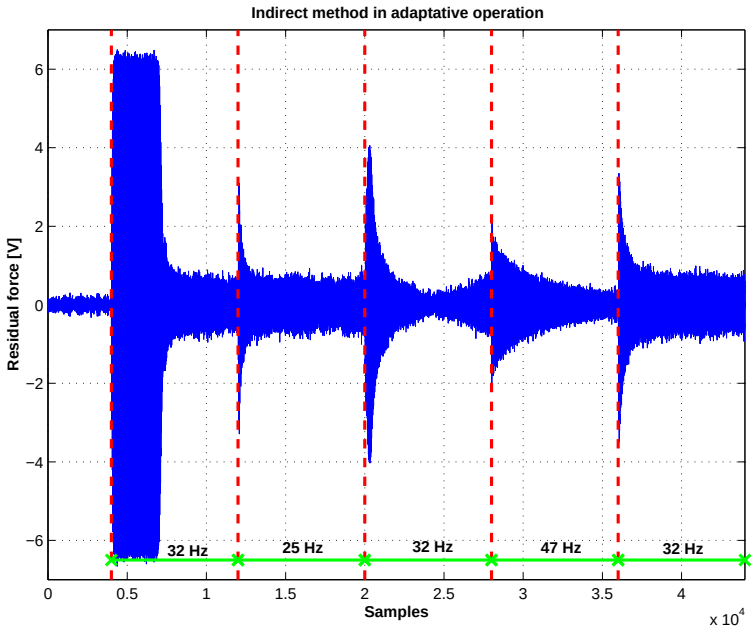

Fig. 14. Time domain results with the indirect adaptation method in the adaptive case (trace $= 5 \cdot 10^{-7}$)

control scheme. Furthermore, from the performances point of view, the adaptive operation is more interesting than the self-tuning one for the direct adaptive control scheme. Moreover, the direct algorithm is much simpler than the indirect one.

A similar approach has been used successfully on a chemical reactor and for noise cancellation in ducts. One can conclude that an efficient technique for rejection of unknown finite band disturbances is available.

For future research it will be interesting to evaluate comparatively this approach with the other approaches indicated in section 6. Establishing connections with "repetitive control" may be also very rewarding.

References

1. A.Karimi. Design and optimization of restricted complexity controllers - benchmark. http://iawww.epfl.ch/News/EJC_Benchmark/, 2002.
2. F. Ben Amara, P.T. Kabamba, and A.G. Ulsoy. Adaptive sinusoidal disturbance rejection in linear discrete-time systems - Part I: Theory. *Journal of Dynamic Systems Measurement and Control*, 121:648–654, 1999.
3. F. Ben Amara, P.T. Kabamba, and A.G. Ulsoy. Adaptive sinusoidal disturbance rejection in linear discrete-time systems - Part II: Experiments. *Journal of Dynamic Systems Measurement and Control*, 121:655–659, 1999.

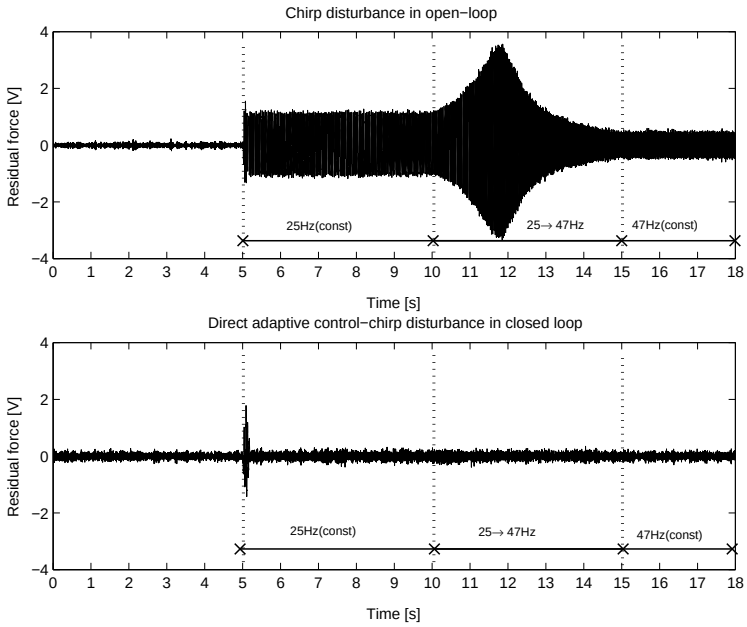

Fig. 15. Real-time results obtained with the direct adaptive method and a chirp disturbance: (a) Open loop; (b) Closed loop

4. B.D.O. Anderson. From Youla-Kucera to identification, adaptive and nonlinear control. *Automatica*, 34:1485–1506, 1998.
5. G. Bengtsson. Output regulation and internal models - a frequency domain approach. *Automatica*, 13:333–345, 1977.
6. L.L. Beranek and I.L. Ver. *Noise and Vibration Control Engineering: Principles and Applications*. Wiley, New York, 1992.
7. M. Bodson. Rejection of periodic distrubances of unknown and time-varying frequency. *Int. J. of Adapt. Contr. and Sign. Proc.*, 19:67–88, 2005.
8. M. Bodson and S.C. Douglas. Adaptive algorithms for the rejection of sinusosidal disturbances with unknown frequency. *Automatica*, 33:2213–2221, 1997.
9. A. Constantinescu. *Commande robuste et adaptative d'une suspension active*. Thèse de doctorat, Institut National Polytechnique de Grenoble, décembre 2001.
10. A. Constantinescu and I.D. Landau. Direct controller order reduction by identification in closed loop applied to a benchmark problem. *European Journal of Control*, 9(1), 2003.
11. Z. Ding. Global stabilization and disturbance suppression of a class of nonlinear systems with uncertain internal model. *Automatica*, 39:471–479, 2003.
12. S.J. Elliott and P.A. Nelson. Active noise control. *Noise / News International*, pages 75–98, June 1994.
13. S.J. Elliott and T.J. Sutton. Performance of feedforward and feedback systems for active control. *IEEE Transactions on Speech and Audio Processing*, 4(3):214–223, May 1996.

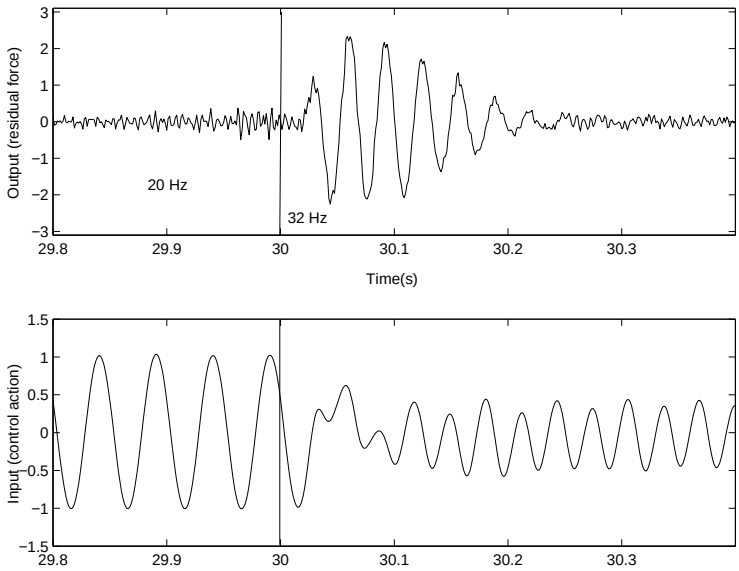

Fig. 16. Adaption transient in the direct adaptive control scheme for a step change of the disturbance frequency from 32Hz to 20Hz

14. G. Feng and M. Palaniswami. A stable adaptive implementation of the internal model principle. *IEEE Trans. on Automatic Control*, 37:1220–1225, 1992.
15. B.A . Francis and W.M. Wonham. The internal model principle of control theory. *Automatica*, 12:457–465, 1976.
16. C.R. Fuller, S.J. Elliott, and P.A. Nelson. *Active Control of Vibration*. Academic Press, New York, 1995.
17. T. Gouraud, M. Gugliemi, and F. Auger. Design of robust and frequency adaptive controllers for harmonic disturbance rejection in a single-phase power network. *Proceedings of the European Control Conference, Bruxelles*, 1997.
18. G. Hillerstrom and J. Sternby. Rejection of periodic disturbances with unknown period - a frequency domain approach. *Proceedings of American Control Conference, Baltimore*, pages 1626–1631, 1994.
19. C.D. Johnson. Theory of disturbance-accomodating controllers. In *Control and Dynamical Systems* (C. T. Leondes, Ed.), 1976. Vol. 12, pp. 387-489.
20. I.D. Landau, A. Constantinescu, P. Loubat, D. Rey, and A. Franco. A methodology for the design of feedback active vibration control systems. *Proceedings of the European Control Conference 2001*, 2001. Porto, Portugal.
21. I.D. Landau, A. Constantinescu, and D. Rey. Adaptive narrow band disturbance rejection applied to an active suspension - an internal model principle approach. *Automatica*, 41(4):563–574, 2005.
22. I.D. Landau, A. Karimi, and A. Constantinescu. Direct controller order reduction by identification in closed loop. *Automatica*, (37):1689–1702, 2001.
23. I.D. Landau, R. Lozano, and M. M'Saad. *Adaptive control*. Springer, London, 1997.

24. I.D. Landau, N. M'Sirdi, and M. M'Saad. Techniques de modélisation récursive pour l'analyse spectrale paramétrique adaptative. *Revue de Traitement du Signal*, 3:183–204, 1986.
25. I.D. Landau and G. Zito. *Digital Control Systems - Design, Identification and Implementation*. Springer, London, 2005.
26. L. Ljung. *System Identification - Theory for the User*. Prentice Hall, Englewood Cliffs, second edition, 1999.
27. R. Marino, G.L. Santosuosso, and P. Tomei. Robust adaptive compensation of biased sinusoidal disturbances with unknown frequency. *Automatica*, 39:1755–1761, 2003.
28. Z. Sun and T.C. Tsao. Adaptive control with asymptotic tracking performance and its application to an electro-hydraulic servo system. *Journal of Dynamic Systems Measurement and Control*, 122:188–195, 2000.
29. Y.Z. Tsypkin. Adaptive-invariant discrete control systems. In *Foundations of Adaptive Control* (M. Thoma and A. Wyner, Eds.), 1991. Vol. 160 of *Lecture Notes in Control and Information Science*, pp. 239-268, Springer Verlag.
30. Y.Z. Tsypkin. Stochastic discrete systems with internal models. *Journal of Automation and Information Sciences*, 29(4&5):156–161, 1997.
31. S. Valentinotti. *Adaptive Rejection of Unstable Disturbances: Application to a Fed-Batch Fermentation*. Thèse de doctorat, École Polytechnique Fédérale de Lausanne, April 2001.
32. B. Widrow and S.D. Stearns. *Adaptive Signal Processing*. Prentice-Hall, Englewood Cliffs, New Jersey, 1985.
33. Y. Zhang, P.G. Mehta, R. Bitmead, and C.R. Johnson. Direct adaptive control for tonal disturbance rejection. *Proceedings of the American Control Conference, Philadelphia*, pages 1480–1482, 1998.