HAL
open science

Output Feedback Stochastic H_infinity Stabilization of Networked Fault Tolerant Control Systems

Samir Aberkane, Dominique Sauter, Jean-Christophe Ponsart

To cite this version:

Samir Aberkane, Dominique Sauter, Jean-Christophe Ponsart. Output Feedback Stochastic H_infinity Stabilization of Networked Fault Tolerant Control Systems. 2nd Workshop on Networked Control System and Fault Tolerant Control, Nov 2006, Rende, Italy. hal-00121700

HAL Id: hal-00121700

https://hal.science/hal-00121700

Submitted on 21 Dec 2006

HAL is a multi-disciplinary open access archive for the deposit and dissemination of scientific research documents, whether they are published or not. The documents may come from teaching and research institutions in France or abroad, or from public or private research centers.

L'archive ouverte pluridisciplinaire **HAL**, est destinée au dépôt et à la diffusion de documents scientifiques de niveau recherche, publiés ou non, émanant des établissements d'enseignement et de recherche français ou étrangers, des laboratoires publics ou privés.

OUTPUT FEEDBACK STOCHASTIC $\mathcal{H}_\infty$ STABILIZATION OF NETWORKED FAULT TOLERANT CONTROL SYSTEMS

S. Aberkane D. Sauter J.C. Ponsart

CRAN – CNRS UMR 7039
Université Henri Poincaré, Nancy 1, BP 239,
F-54506 Vandœuvre-lès-Nancy Cedex
Tel.: +33 3 83 68 44 74, Fax: +33 3 83 68 44 61
e-mail: samir.aberkane@cran.uhp-nancy.fr

Abstract: In this paper, static output feedback stochastic stabilization and disturbance attenuation issues for a class of discrete-time Networked Control Systems (NCSs) subject to random failures and random delays are addressed. The different random processes are modeled as Markovian chains, and the resulting closed-loop system belongs to the class of discrete-time Markovian Jump Linear Systems (MJLS). Results are formulated as matrix inequalities. A numerical algorithm based on non-convex optimization is provided and its running is illustrated on a classical example from literature.

Keywords: Fault Tolerant Control - Networked Systems- Stochastic Hybrid Systems - Markovian Jumping Parameters - Random Delays - Static Output Feedback - Linear Matrix Inequalities (LMI).

1. INTRODUCTION

Networked control systems (NCSs) are feedback control loops closed through a real time network. That is, in NCSs, communication networks are used to exchange informations and control signals (reference input, plant output, control input,...*etc.*) between control system components (sensors, controllers, actuators,...*etc*). The main advantages of NCSs are low cost, reduced weight, simple installation and maintenance, and high reliability. As a result, NCSs have great potential in application in complex advanced technological systems such as manufacturing plants, vehicles, aircrafts, spacecrafts ...*etc* (Walsh *et al.*, 2002). At the same time, these complex systems could have various consequences in the event of component failures. Therefore, it is very important to consider the safety and fault tolerance of such systems at the design stage. For these safety-critical systems, Fault Tolerant Control Systems (FTCS) have been developed to meet these essential objectives. FTCS have been a subject of great practical importance, which has attracted a lot of interest for the last three decades. A bibliographical review on reconfigurable fault tolerant control systems can be found in (Zhang and Jiang, 2003).

Despite the advantages and potentials, communication networks in control loops make the analysis and design of NCSs complicated. One main issue is the network induced delays, which occur when sensors, actuators, and controllers exchange data across the network. The delays may be constant, time-varying, and in most cases, random. It is known that the occurrence of delay degrades the stability and control performances of closed-loop control systems. In (Nilsson *et al.*, 1998), the stability analysis and control design of NCSs were studied when the network-induced delay at each sampling instant is random and less

than one sampling time. In (Zhang *et al.*, 2001), the stability of NCSs was analyzed by a hybrid system approach when the induced delay is deterministic (constant or time-varying) and the controller gain is constant; and in (Lin *et al.*, 2003), a switched system approach was used to study the stability of NCSs. In (Yu *et al.*, 2004), the maximum of the network-induced delay preserving the closed-loop stability for a given plant and controller was considered. In (Xie and Wang, 2004), the network-induced delay is assumed to be time-varying and less than one sampling time. It is noticed that in all of the aforementioned papers, the plant is in the continuous-time domain. For the discrete-time case, in (Krtolica *et al.*, 1992) and (Xiao *et al.*, 2000), the network-induced random delays were modeled as Markov chains such that the closed-loop system is a jump linear system with one mode. The class of linear systems with Markovian jumping parameters has attracted increasing attention in the recent literature. Markovian jump systems are those having transition between models determined by a Markov chain. It is very appropriate to model plants whose structures are subject to random abrupt changes due to component failures or repairs, sudden environmental changes, abrupt variations of the operating point of a nonlinear plant, changing subsystem interconnections, and so on. The theory of stability, optimal control and $\mathcal{H}_2/\mathcal{H}_\infty$ control, as well as important applications of such systems, can be found in several papers in the current literature, for instance in (Boukas, 2006; Boukas, 2005; Boukas, 1999; Costa *et al.*, 1999; de Farias *et al.*, 2000; de Souza and Fragoso, 1993; Dragan and Morozan, 2002; Dragan *et al.*, 2004; Ji and Chizeck, 1990; Ji and Chizeck, 1992) for continuous-time case, and (Costa *et al.*, 2005) for the discrete-time case. Fault tolerant control issues were also considered in the same framework, for instance in (Aberkane *et al.*, 2005; Aberkane *et al.*, 2006*b*; Aberkane *et al.*, 2006*a*; Mahmoud *et al.*, 2003; Shi and Boukas, 1997; Shi *et al.*, 2003; Srichander and Walker, 1993).

On the other hand, one of the most challenging open problems in control theory is the synthesis of fixed-order or static output feedback controllers that meet desired performances and specifications (Syrmos *et al.*, 1997). Among all variations of this problem, this note is concerned with the problem of static output feedback stochastic stabilization and disturbance attenuation ($\mathcal{H}_\infty$ control) issues for a class of discrete-time NCSs subject to random failures, random delays and/or packet loss. Results are formulated as matrix inequalities with an equality constraint of the form $\mathcal{P}\mathcal{X} = \mathbb{I}$. A numerical algorithm based on nonconvex optimization is provided and its running is illustrated on a classical example from literature.

This paper is organized as follows: Section 2 describes the dynamical model of the system with appropriately defined random processes. A brief summary of basic stochastic terms, results and definitions are given in Section 3. Section 4 addresses the stochastic stabilization and $\mathcal{H}_\infty$ control problematic. In Section 5, a numerical algorithm based on nonconvex optimization is provided and its running is illustrated on a classical example from literature. Finally, a conclusion is given in Section 6.

Notations. The notations in this paper are quite standard. $\mathbb{R}^{m\times n}$ is the set of m-by-n real matrices. A' is the transpose of the matrix A. The notation $X \geq Y$ ($X > Y$, respectively), where X and Y are symmetric matrices, means that $X - Y$ is positive semi-definite (positive definite, respectively); $\mathbb{I}$ and $\mathbf{0}$ are identity and zero matrices of appropriate dimensions, respectively; $\mathcal{E}\{\cdot\}$ denotes the expectation operator with respect to some probability measure P; $L^2[0,\infty)$ stands for the space of square-summable vector functions over the interval $[0,\infty)$; $\|\cdot\|$ refers to either the Euclidean vector norm or the matrix norm, which is the operator norm induced by the standard vector norm; $\|\cdot\|_2$ stands for the norm in $L^2[0,\infty)$; while $\|\cdot\|_{\mathcal{E}_2}$ denotes the norm in $L^2((\Omega,\mathcal{F},P),[0,\infty))$; $(\Omega,\mathcal{F},P)$ is a probability space. In block matrices, $\star$ indicates symmetric terms: $\begin{bmatrix} A & B \\ B' & C \end{bmatrix} = \begin{bmatrix} A & \star \\ B' & C \end{bmatrix} = \begin{bmatrix} A & B \\ \star & C \end{bmatrix}$.

2. SYSTEM MODELING

Consider the following class of dynamical systems in a given fixed complete probability space $(\Omega,\mathcal{F},P)$:

$$\varphi : \begin{cases} x_{k+1} = A(\eta_k)x_k + B_u(\eta_k)u(y_k,k) + B_w(\eta_k)w_k \\ y_k = C_y x_k \\ z_k = C_z(\eta_k)x_k + D_z(\eta_k)u(y_k,k) \end{cases} \tag{1}$$

where $x_k \in \mathbb{R}^n$ is the system state, $u(y_k,k) \in \mathbb{R}^r$ is the system input, $y_k \in \mathbb{R}^q$ is the system measured output, w_k is the system external disturbance which belongs to $L^2[0,\infty)$, z_k is the controlled output which belongs to $L^2((\Omega,\mathcal{F},P),[0,\infty))$ and $\{\eta_k, k \geq 0\}$ denotes the state of the random process describing the failures. It is assumed that η_k is a measurable discrete-time Markov process taking values on a finite set $\beth = \{1,\ldots,\nu\}$. For the failure process η_k, the known one-step transition probability from state i to state l, $i,l \in \beth$ is given by α_{il}, *i.e.*

$$\alpha_{il} = \text{Prob}\{\eta_{k+1} = l \mid \eta_k = i\} \tag{2}$$

It is also assumed that there are random but bounded delays from the sensor to the controller (Figure–1). The mode-dependent switching static output feedback control law is

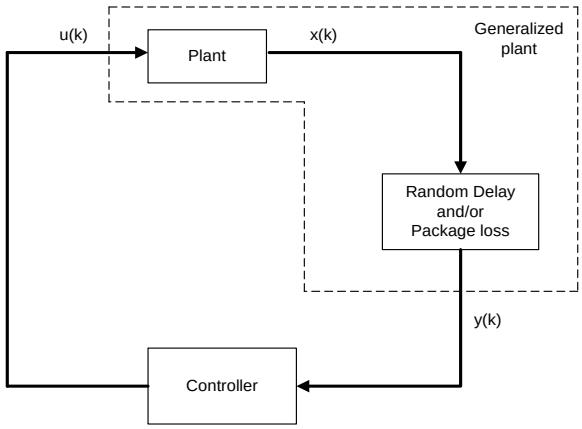

Figure 1. Control over networks: the general case

$$\varphi_s : \Big\{ u(y_k, r_{sk}, k) = \mathcal{K}(r_{sk}) y_k = \mathcal{K}(r_{sk}) C_y x_{k-r_{sk}} \tag{3}$$

where $\{r_{sk}\}$ is a bounded random integer sequence with $0 \le r_{sk} \le d_s < \infty$, and d_s is the finite delay bound.

Remark 1 We can use a mode-dependent switching controller if we know the delay steps on-line, and this is the case if we use time-stamped data in the network communication. However, it is important to note that the theoretical results developed in this work remain correct for the case of mode-independent control.

If we augment the state variable

$$\tilde{x}_k = [x'_k \; x'_{k-1} \; \dots \; x'_{k-d_s}]'$$

where $\tilde{x}_k \in \mathbb{R}^{(d_s+1)n}$, then the closed-loop system is

$$\begin{cases} \tilde{x}_{k+1} = \left(\tilde{A}(\eta_k) + \tilde{B}_u(\eta_k)\mathcal{K}(r_{sk})\tilde{C}_y(r_{sk})\right)\tilde{x}_k + \tilde{B}_w(\eta_k) w_k \\ y_k = \tilde{C}_y(r_{sk})\tilde{x}_k \\ z_k = \left(\tilde{C}_z(\eta_k) + D_z(\eta_k)\mathcal{K}(r_{sk})\tilde{C}_y(r_{sk})\right)\tilde{x}_k \end{cases} \tag{4}$$

where

$$\tilde{A}(\eta_k) = \begin{bmatrix} A(\eta_k) & \mathbf{0} & \dots & \mathbf{0} & \mathbf{0} \\ \mathbb{I} & \mathbf{0} & \dots & \mathbf{0} & \mathbf{0} \\ \mathbf{0} & \mathbb{I} & \dots & \mathbf{0} & \mathbf{0} \\ \vdots & \vdots & \ddots & \vdots & \vdots \\ \mathbf{0} & \mathbf{0} & \dots & \mathbb{I} & \mathbf{0} \end{bmatrix}, \; \tilde{B}_u(\eta_k) = \begin{bmatrix} B_u(\eta_k) \\ \mathbf{0} \\ \mathbf{0} \\ \vdots \\ \mathbf{0} \end{bmatrix},$$

$$\tilde{B}_w(\eta_k) = \begin{bmatrix} B_w(\eta_k) \\ \mathbf{0} \\ \mathbf{0} \\ \vdots \\ \mathbf{0} \end{bmatrix}.$$

$$\tilde{C}_y(r_{sk}) = \begin{bmatrix} \mathbf{0} \; \dots \; \mathbf{0} \; C_y \; \mathbf{0} \; \dots \; \mathbf{0} \end{bmatrix}$$

$$\tilde{C}_z(\eta_k) = \begin{bmatrix} C_z(\eta_k) \; \dots \; \mathbf{0} \; \mathbf{0} \; \mathbf{0} \; \dots \; \mathbf{0} \end{bmatrix}$$

and $\tilde{C}_y(r_{sk})$ has all elements being zero except for the $(r_{sk}+1)$th block being the matrice C_y.

One of the difficulties with this approach is how to model the r_{sk} sequence. One way is to model the transitions of the random delays r_{sk} as a finite state Markov process (Krtolica *et al.*, 1992; Xiao *et al.*, 2000; Zhang *et al.*, 2005). In this case we have

$$\text{Prob}\{r_{sk+1} = j \mid r_{sk} = i\} = p_{ij} \tag{5}$$

where $0 \le i, j \le d_s$. This model is quite general, communication package loss in the network can be included naturally as explained below (Xiao *et al.*, 2000). The assumption here is that the controller will always use the most recent data. Thus, if we have $y_{k-r_{sk}}$ at step k, but there is no new information coming at step $k+1$ (data could be lost or there is a longer delay), then we at least have $y_{k-r_{sk}}$ available for feedback. So, in our model of the system in Figure 1, the delay r_{sk} can increase at most by 1 each step, and we constrain

$$\text{Prob}\{r_{sk+1} > r_{sk} + 1\} = 0$$

However, the delay r_{sk} can decrease as many steps as possible. Decrement of r_{sk} models communication package loss in the network, or disregarding old data if we have newer data coming at the same time. Hence the structured transition probability matrix is

$$P_s = \begin{bmatrix} p_{00} & p_{01} & 0 & 0 & \dots & 0 \\ p_{10} & p_{11} & p_{12} & 0 & \dots & 0 \\ \vdots & \vdots & \vdots & \vdots & \ddots & \vdots \\ \vdots & \vdots & \vdots & \vdots & \vdots & p_{(d_s-1)d_s} \\ p_{d_s 0} & p_{d_s 1} & p_{d_s 2} & p_{d_s 3} & \dots & p_{d_s d_s} \end{bmatrix} \tag{6}$$

where

$$0 \le p_{ij} \le 1 \text{ and } \sum_{j=0}^{d_s} p_{ij} = 1 \tag{7}$$

because each row represents the transition probabilities from a fixed state to all the states. The diagonal elements are the probabilities of data coming in sequence with equal delays. The elements above the diagonal are the probabilities of encountering longer delays, and the elements below the diagonal indicate package loss or disregarding old data.

3. BASIC DEFINITIONS AND RESULTS

In this section, we will first give some basic definitions related to stochastic stability notions and then we will summarize some results about stochastic stabilizability of the discrete-time NCS subject to random failures and delays. Without loss of generality, we assume that the equilibrium point, $x = 0$, is the solution at which stability properties are examined. We introduce the following stability and stabilizability definitions for discrete-time jump linear system.

Definition 1. The system (1) with $u_k \equiv 0$, $w_k \equiv 0$, is said to be *stochastically stable*, if for every initial state (x_0, r_{s0}, η_0), the following holds:

$$\mathcal{E}\left\{ \sum_{k=0}^{\infty} \| x_k(x_0, r_{s0}, \eta_0) \|^2 | \, x_0, r_{s0}, \eta_0 \right\} < \infty \tag{8}$$

Definition 2. We say that system (1) (with $w(k) \equiv 0$) is *stochastically stabilizable*, if for every initial state $(\tilde{x}_0, r_{s0}, \eta_0)$, there exists a linear static output feedback control law φ_s such that the closed loop system (4) is stochastically stable.

The following proposition gives a necessary and sufficient condition for the mean square stability of system (4).

Proposition 1. The following statements are equivalent:

i) System (4) is stochastically stabilizable by φ_s;

ii) The matrix inequalities

$$\bar{A}'_{ij}\bar{\mathcal{P}}_{ij}\bar{A}_{ij} - \mathcal{P}_{ij} < 0, \quad \forall i \in \beth,\ j \in S. \tag{9}$$

are feasible for some matrices $\mathcal{K}_j$ and $\mathcal{P}_{ij} > 0$. where

$$\bar{A}_{ij} = \tilde{A}_i + \tilde{B}_i\mathcal{K}_j\tilde{C}_{yj}; \quad \bar{\mathcal{P}}_{ij} = \sum_{v=1}^{d_s} p_{jv} \sum_{m=1}^{\nu} \alpha_{im}\mathcal{P}_{mv}$$

iii) For any given $\mathbf{Q} = (\mathcal{Q}_{11}, \ldots, \mathcal{Q}_{ij}, \ldots, \mathcal{Q}_{\nu d_s})$ with $\mathcal{Q}_{ij} > 0$, there exist a unique $\mathbf{P} = (\mathcal{P}_{11}, \ldots, \mathcal{P}_{ij}, \ldots, \mathcal{P}_{\nu d_s})$ with $\mathcal{P}_{ij} > 0$ satisfying the following coupled Lyapunov equations

$$\bar{A}'_{ij}\bar{\mathcal{P}}_{ij}\bar{A}_{ij} - \mathcal{P}_{ij} + \mathcal{Q}_{ij} = 0 \quad \forall i \in \beth,\ j \in S. \tag{10}$$

□

Proof. The proof of this Proposition follows the same lines as for the proof of stability results in (Costa *et al.*, 2005; Zhang *et al.*, 2003), except here we consider two Makovian processes, while in the aforementioned references, the authors consider a single Markov process. ■

We conclude this section by introducing the following Lemma that will be used in the derivation of the main results of this note.

Lemma 1. The following statements are equivalent

i) There exists a symmetric definite positive matrix $\mathcal{P}$ such that

$$A'f(\mathcal{P})A - \mathcal{P} < 0$$

where $f(\mathcal{P}) > 0$ is a matrix function of $\mathcal{P}$.

ii) There exists a symmetric definite positive matrix $\mathcal{P}$ and a matrix $\mathcal{G}$ such that

$$\begin{bmatrix} -\mathcal{P} & A'\mathcal{G}' \\ \star & -\mathcal{G} - \mathcal{G}' + f(\mathcal{P}) \end{bmatrix} < 0$$

♦

Proof. The proof of this lemma follows the same arguments as for the proof of Theorem 1 in (de Oliveira *et al.*, 1999). ■

4. MAIN RESULTS

4.1 *Stochastic Stabilization*

In this section, we shall address the problem of finding all static compensators (φ_s), as defined in section 2, such that the closed loop system (φ_{cl}) becomes stochastically stable. To this end, we use Proposition 1 to get the following necessary and sufficient conditions for the stochastic stabilizability of the system (4).

Proposition 2. System (4) is stochastically stabilized by φ_s iff there exists matrices $\mathcal{K}_j$, matrices $\bar{\mathcal{G}}_{ij}$ and symmetric matrices $\mathcal{P}_{ij} > 0$, $\mathcal{X}_{ij} > 0$ satisfying the following coupled matrix inequalities

$$\begin{bmatrix} -\mathcal{P}_{ij} & \bar{A}'_{ij} & \mathbf{0} \\ \star & -\bar{\mathcal{G}}_{ij} - \bar{\mathcal{G}}'_{ij} & \bar{\mathcal{G}}_{ij}\mathbb{R}_{ij} \\ \star & \star & -\bar{\mathcal{X}} \end{bmatrix} < 0 \tag{11}$$

under the constraints

$$\mathcal{P}_{ij}\mathcal{X}_{ij} = \mathbb{I} \tag{12}$$

where

$$\begin{cases} \bar{\mathcal{X}} = \mathrm{diag}\{\daleth_1, \daleth_2, \ldots, \daleth_\nu\}; \\ \daleth_1 = [\mathcal{X}_{11}, \mathcal{X}_{12}, \ldots, \mathcal{X}_{1d_s}]; \\ \vdots \\ \daleth_\nu = [\mathcal{X}_{\nu 1}, \mathcal{X}_{\nu 2}, \ldots, \mathcal{X}_{\nu d_s}]; \\ \mathbb{R}_{ij} = [\Gamma_{1ij}, \Gamma_{2ij}, \ldots, \Gamma_{\nu ij}]; \\ \Gamma_{1ij} = \left[\sqrt{\alpha_{i1}p_{j1}}, \sqrt{\alpha_{i1}p_{j2}}, \ldots, \sqrt{\alpha_{i1}p_{jd_s}}\right]; \\ \vdots \\ \Gamma_{\nu ij} = \left[\sqrt{\alpha_{i\nu}p_{j1}}, \sqrt{\alpha_{i\nu}p_{j2}}, \ldots, \sqrt{\alpha_{i\nu}p_{jd_s}}\right]; \end{cases}$$

Then, if (11)-(12) are feasible, the stabilizing output feedback control law is given by

$$u_{j_k} = \mathcal{K}_j y_k$$

□

Proof. Let us consider the matrix inequalities given by (9). The use of Lemma 1 with $f(\mathcal{P}_{ij}) = \bar{\mathcal{P}}_{ij}$ yields

$$\begin{bmatrix} -\mathcal{P}_{ij} & \bar{A}'_{ij}\mathcal{G}'_{ij} \\ \star & -\mathcal{G}'_{ij} - \mathcal{G}_{ij} + \bar{\mathcal{P}}_{ij} \end{bmatrix} < 0 \tag{13}$$

Notice that from (13), $\mathcal{G}_{ij}$ is nonsingular. Let us define $\bar{\mathcal{G}}_{ij} = \mathcal{G}_{ij}^{-1}$, then by the congruence transformation

$$\begin{bmatrix} \mathbb{I} & \mathbf{0} \\ \mathbf{0} & \bar{\mathcal{G}}_{ij} \end{bmatrix}$$

and with a Schur complement operation with respect to the term $\bar{\mathcal{G}}_{ij}\bar{\mathcal{P}}_{ij}\bar{\mathcal{G}}'_{ij}$, the inequality (13) in turn becomes

$$\begin{bmatrix} -\mathcal{P}_{ij} & \bar{A}'_{ij} & \mathbf{0} \\ \star & -\bar{\mathcal{G}}_{ij} - \bar{\mathcal{G}}'_{ij} & \bar{\mathcal{G}}_{ij}\mathbb{R}_{ij} \\ \star & \star & -\bar{\mathcal{X}} \end{bmatrix} < 0 \tag{14}$$

then, the proof is complete. ■

4.2 *The $\mathcal{H}_\infty$ Control Problem*

In this section, we deal with the design of controllers that stochastically stabilize the closed-loop system and guarantee the disturbance rejection, with a certain level $\gamma_\infty > 0$. This problematic is addressed under a nonconvex optimization framework.

In order to put the $\mathcal{H}_\infty$ control problem in a stochastic setting, we bring to bear the space $L^2((\Omega,\mathcal{F},P),[0,\infty))$ of $\mathcal{F}$-measurable processes, z_k, for which

$$\| z \|_{\mathcal{E}_2} = \mathcal{E}\left\{\sum_{k=0}^{\infty} z_k' z_k\right\}^{1/2} < \infty$$

The stochastic $\mathcal{H}_\infty$ control problem can be stated as follows:

For a given level on the $\mathcal{H}_\infty$ norm, γ_∞, find stabilizing static output feedback gains $\mathcal{K}_j$ such that

$$\mathcal{E}\left\{\sum_{k=0}^{\infty} z_k' z_k\right\} < \gamma_\infty^2 \sum_{k=0}^{\infty} w_k' w_k \tag{15}$$

i.e.

$$\| z_\infty \|_{\mathcal{E}_2} < \gamma_\infty \| w \|_2$$

In this situation, the closed loop system (4) is said to have an $\mathcal{H}_\infty$ performance level γ_∞ over $[0,\infty)$.

Before introducing our result on $\mathcal{H}_\infty$ control for this class of stochastic hybrid systems, let us consider the following proposition which is obtained as a special case of the bounded real lemma of discrete time Markovian jump linear systems (Zhang *et al.*, 2003).

Proposition 3. The system (4) is stochastically stable and $\| \varphi_{cl} \|_\infty < \gamma_\infty$ if and only if there exist matrices $\mathcal{K}_j$ and symmetric matrices $\mathcal{P}_{ij} > 0$ satisfying the following coupled matrix inequalities

$$\begin{bmatrix} \bar{A}_{ij}'\bar{\mathcal{P}}_{ij}\bar{A}_{ij} - \mathcal{P}_{ij} + \bar{C}_{zij}'\bar{C}_{zij} & \bar{A}_{ij}'\bar{\mathcal{P}}_{ij}\tilde{B}_{wi} \\ \star & -(\gamma_\infty^2\mathbb{I} - \tilde{B}_{wi}'\bar{\mathcal{P}}_{ij}\tilde{B}_{wi}) \end{bmatrix} < 0 \tag{16}$$

where

$$\bar{C}_{zij} = \tilde{C}_{zi} + D_{zi}\mathcal{K}_j\tilde{C}_{yj}$$

□

Now, we are in position to give the result on the solvability of the $\mathcal{H}_\infty$ static output feedback control problem. Indeed, Proposition 4 gives a NLMI (Nonlinear Matrix Inequalities) characterization of static output feedback compensators (φ_s) that stochastically stabilize the closed loop system (4) and ensures (15).

Proposition 4. System (4) is stochastically stabilized by φ_s and $\| \varphi_{cl} \|_\infty < \gamma_\infty$ iff there exists matrices $\mathcal{K}_j$, matrices $\bar{\mathcal{G}}_{ij}$ and symmetric matrices $\mathcal{P}_{ij} > 0$, $\mathcal{X}_{ij} > 0$ satisfying the following coupled matrix inequalities

$$\begin{bmatrix} -\begin{bmatrix}\mathbb{I}\\ \mathbf{0}\end{bmatrix}\mathcal{P}_{ij}\begin{bmatrix}\mathbb{I} & \mathbf{0}\end{bmatrix} - \begin{bmatrix}\mathbf{0} & \mathbf{0}\\ \mathbf{0} & \gamma_\infty^2\mathbb{I}\end{bmatrix} & \begin{bmatrix}\bar{C}_{zij}'\\ \mathbf{0}\end{bmatrix} & \begin{bmatrix}\bar{A}_{ij}'\\ \tilde{B}_{wi}'\end{bmatrix} & \mathbf{0} \\ \star & -\mathbb{I} & \mathbf{0} & \mathbf{0} \\ \star & \star & -\bar{\mathcal{G}}_{ij} - \bar{\mathcal{G}}_{ij}' & \bar{\mathcal{G}}_{ij}\mathbb{R}_{ij} \\ \star & \star & \star & -\bar{\mathcal{X}} \end{bmatrix} < 0 \tag{17}$$

under the constraints

$$\mathcal{P}_{ij}\mathcal{X}_{ij} = \mathbb{I} \tag{18}$$

If (17)-(18) are feasible, the stabilizing output feedback control law that guarantees an $\mathcal{H}_\infty$ performance level γ_∞ is given by

$$u_{j_k} = \mathcal{K}_j y_k$$

□

Proof. The matrix inequalities (16) can be equivalently written as follows

$$\begin{bmatrix}\bar{A}_{ij}'\\ \tilde{B}_{wi}'\end{bmatrix}\bar{\mathcal{P}}_{ij}\begin{bmatrix}\bar{A}_{ij} & \tilde{B}_{wi}\end{bmatrix} \underbrace{-\left\{\begin{bmatrix}\mathbb{I}\\ \mathbf{0}\end{bmatrix}\mathcal{P}_{ij}\begin{bmatrix}\mathbb{I} & \mathbf{0}\end{bmatrix} + \begin{bmatrix}\mathbf{0} & \mathbf{0}\\ \mathbf{0} & \gamma_\infty^2\mathbb{I}\end{bmatrix} - \begin{bmatrix}\bar{C}_{zij}'\\ \mathbf{0}\end{bmatrix}\begin{bmatrix}\bar{C}_{zij} & \mathbf{0}\end{bmatrix}\right\}}_{\mathcal{L}_{ij}} < 0 \tag{19}$$

The use of Lemma 1 with $f(\mathcal{P}_{ij}) = \bar{\mathcal{P}}_{ij}$ yields

$$\begin{bmatrix} -\mathcal{L}_{ij} & \begin{bmatrix}\bar{A}_{ij}'\\ \tilde{B}_{wi}'\end{bmatrix}\mathcal{G}_{ij}' \\ \star & -\mathcal{G}_{ij}' - \mathcal{G}_{ij} + \bar{\mathcal{P}}_{ij} \end{bmatrix} < 0 \tag{20}$$

then by the congruence transformation

$$\begin{bmatrix}\mathbb{I} & \mathbf{0}\\ \mathbf{0} & \bar{\mathcal{G}}_{ij}\end{bmatrix}$$

and with a Schur complement property, we obtain (17). Hence, the proof is complete. ■

5. COMPUTATIONAL ISSUES AND EXAMPLE

5.1 *A Cone Complementary Algorithm*

The necessary and sufficient conditions derived in Proposition 2 and Proposition 4 are formulated as LMI feasibility problem under equality constraints of the form $\mathcal{P}_{ij}\mathcal{X}_{ij} = \mathbb{I}$. The numerical example is solved using a first order iterative algorithm. It is based on a cone complementary (CCL) technique (Ghaoui *et al.*, 1997), that allows to concentrate the non convex constraint in the criterion of some optimisation problem.

For $\mathbf{P} = (\mathcal{P}_{11},\ldots,\mathcal{P}_{ij},\ldots,\mathcal{P}_{\nu d_s})$, $\mathbf{G} = (\mathcal{G}_{11},\ldots,\mathcal{G}_{ij},\ldots,\mathcal{G}_{\nu d_s})$, $\mathbf{K} = (\mathcal{K}_1,\ldots,\mathcal{K}_j,\ldots,\mathcal{K}_{d_s})$ and $\mathbf{X} = (\mathcal{X}_{11},\ldots,\mathcal{X}_{ij},\ldots,\mathcal{X}_{\nu d_s})$, define two convex sets by a set of LMIs as

$$\mathcal{C}^s_{(\mathbf{P},\mathbf{G},\mathbf{K},\mathbf{X})} \triangleq \{(\mathbf{P},\mathbf{G},\mathbf{K},\mathbf{X}) : \text{LMIs}(11), \mathcal{P}_{ij} > 0, \mathcal{X}_{ij} > 0,\}$$

and

$$\mathcal{C}^{\mathcal{H}_\infty}_{(\mathbf{P},\mathbf{G},\mathbf{K},\mathbf{X})} \triangleq \{(\mathbf{P},\mathbf{G},\mathbf{K},\mathbf{X}) : \text{LMIs}(17), \mathcal{P}_{ij} > 0, \mathcal{X}_{ij} > 0,\}$$

It can be seen from Proposition 4 (resp. Proposition 2) that the $\mathcal{H}_\infty$ control problem (resp. stochastic stabilization) of the system (4) is solved iff there exist $\mathbf{P} = (\mathcal{P}_{11},\ldots,\mathcal{P}_{ij},\ldots,\mathcal{P}_{\nu d_s})$, $\mathbf{G} = (\mathcal{G}_{11},\ldots,\mathcal{G}_{ij},\ldots,\mathcal{G}_{\nu d_s})$, $\mathbf{K} = (\mathcal{K}_1,\ldots,\mathcal{K}_j,\ldots,\mathcal{K}_{d_s})$ and $\mathbf{X} = (\mathcal{X}_{11},\ldots,\mathcal{X}_{ij},\ldots,\mathcal{X}_{\nu d_s})$ such that

$$(\mathbf{P},\mathbf{G},\mathbf{K},\mathbf{X}) \in \mathcal{C}^{\mathcal{H}_\infty}_{(\mathbf{P},\mathbf{G},\mathbf{K},\mathbf{X})}, \mathcal{P}_{ij}\mathcal{X}_{ij} = \mathbb{I}, \forall i \in \sqsupset, j \in S \tag{21}$$

(resp.

$$(\mathbf{P},\mathbf{G},\mathbf{K},\mathbf{X}) \in \mathcal{C}^{s}_{(\mathbf{P},\mathbf{G},\mathbf{K},\mathbf{X})}, \mathcal{P}_{ij}\mathcal{X}_{ij} = \mathbb{I}, \forall i \in \beth, j \in S) \tag{22}$$

is feasible.

The CCL algorithm is based on the fact that for any matrices $\mathcal{X} > 0$ and $\mathcal{P} > 0$ ($\mathcal{X}, \mathcal{P} \in \mathbb{R}^{n\times n}$), if the LMI

$$\begin{bmatrix} \mathcal{X} & \mathbb{I} \\ \star & \mathcal{P} \end{bmatrix} \geq 0 \tag{23}$$

is feasible, then $\mathrm{tr}(\mathcal{P}\mathcal{X}) \geq n$, and $\mathrm{tr}(\mathcal{P}\mathcal{X}) = n$ if and only if $\mathcal{P}\mathcal{X} = \mathbb{I}$. Hence a feasible solution of (21) (resp. (22)) can be obtained from the solution of the following nonconvex optimization problem

$$\min_{(\mathbf{P},\mathbf{G},\mathbf{K},\mathbf{X})\in\mathcal{C}^{\mathcal{H}_\infty}_{(\mathbf{P},\mathbf{G},\mathbf{K},\mathbf{X})}} \left\{ \mathrm{tr}(\mathbb{X}\mathbb{P}) : \begin{bmatrix} \mathcal{X}_{ij} & \mathbb{I} \\ \mathbb{I} & \mathcal{P}_{ij} \end{bmatrix} \geq 0 \right\} \tag{24}$$

(resp.

$$\min_{(\mathbf{P},\mathbf{G},\mathbf{K},\mathbf{X})\in\mathcal{C}^{s}_{(\mathbf{P},\mathbf{G},\mathbf{K},\mathbf{X})}} \left\{ \mathrm{tr}(\mathbb{X}\mathbb{P}) : \begin{bmatrix} \mathcal{X}_{ij} & \mathbb{I} \\ \mathbb{I} & \mathcal{P}_{ij} \end{bmatrix} \geq 0 \right\}) \tag{25}$$

where

$$\mathbb{X} = \mathrm{diag}\{\mathcal{X}_{11}, \ldots, \mathcal{X}_{ij}, \ldots, \mathcal{X}_{\nu d_s}\}$$
$$\mathbb{P} = \mathrm{diag}\{\mathcal{P}_{11}, \ldots, \mathcal{P}_{ij}, \ldots, \mathcal{P}_{\nu d_s}\}$$

We may see that if the optimal solution of (24) (resp. (25)) satisfies

$$\mathrm{tr}(\mathbb{X}\mathbb{P}) = \nu \times (d_s + 1)^2 \times n \tag{26}$$

then (21) (resp. (22)) is feasible. Hence, the $\mathcal{H}_\infty$ control problem (resp. stochastic stabilization) of the system (4) is now changed to a problem of finding a global solution of the minimization problem (24) (resp. (25)). This is however, still a difficult issue since the objective function is nonconvexe. The CCL algorithm can find the global solutions of problems like (24) (resp. (25)) most of the time (de Oliveira and Geromel, 1997).

CCL Algorithm: For a given $\gamma_\infty > 0$

i) **Feasibility.** $h = 0$: start from a point $(\mathbf{P}_0, \mathbf{G}_0, \mathbf{K}_0, \mathbf{X}_0) \in \mathcal{C}^{\mathcal{H}_\infty}_{(\mathbf{P},\mathbf{G},\mathbf{K},\mathbf{X})}$;

ii) set $\mathbf{V}_h = \mathbb{P}_h$ and $\mathbf{W}_h = \mathbb{X}_h$. Define the linear function

$$f_h(\mathbf{P},\mathbf{X}) = \mathrm{tr}(\mathbf{V}_h\mathbb{X} + \mathbf{W}_h\mathbb{P}) \tag{27}$$

iii) find $(\mathbb{P}_{h+1}, \mathbb{X}_{h+1})$ solving the following convex programming

$$\min_{(\mathbf{P},\mathbf{G},\mathbf{K},\mathbf{X})\in\mathcal{C}^{\mathcal{H}_\infty}_{(\mathbf{P},\mathbf{G},\mathbf{K},\mathbf{X})}} \left\{ f_h(\mathbf{P},\mathbf{X}) : \begin{bmatrix} \mathcal{X}_{ij} & \mathbb{I} \\ \mathbb{I} & \mathcal{P}_{ij} \end{bmatrix} \geq 0 \right\} \tag{28}$$

iv) if f_h converges, then exit. Otherwise, set $h = h + 1$ and go to step ii).

The first step of the algorithm and every step ii) are simple LMI problems. There are many algorithms for these problems, especially, interior-point methods.

5.2 *Numerical example*

In this section, the proposed static output feedback $\mathcal{H}_\infty$ control of the NCS subject to random failures is illustrated using a VTOL helicopter model (Jiang and Chowdhury, 2005). The sampling time is $T_s = 0.01s$, and the random sensor delay exists in $r_s \in \{0, 1\}$, and its transition probability matrix is given by

$$[p_{ij}] = \begin{bmatrix} 0.9 & 0.1 \\ 0.9 & 0.1 \end{bmatrix}$$

Consider the nominal system with

$$A = \begin{bmatrix} 0.9996 & 0.00027 & 0.0001646 & -0.004557 \\ 0.0004794 & 0.99 & -0.0001761 & -0.04001 \\ 0.0009995 & 0.005004 & 0.9931 & 0.02527 \\ 5.002e-006 & 2.509e-005 & 0.009965 & 1 \end{bmatrix},$$

$$B_u = \begin{bmatrix} 0.004423 & 0.001754 \\ 0.05087 & -0.07554 \\ -0.05488 & 0.04455 \\ -0.0002749 & 0.0002233 \end{bmatrix}, \; B_w = \begin{bmatrix} 0.1 & 0 \\ 0 & 0 \\ 0 & 0 \\ 0 & 0.1 \end{bmatrix};$$

$$C_y = \begin{bmatrix} 1 & 0 & 0 & 0 \\ 0 & 1 & 0 & 0 \end{bmatrix}; C_z = \begin{bmatrix} 0 & 1 & 0 & 0 \end{bmatrix}; D_z = \begin{bmatrix} 1 & 0 \end{bmatrix}.$$

The state vector $x_k \in \mathbb{R}^4$ is composed by the following:

x_1: longitudinal velocity;
x_2: vertical velocity;
x_3: rate of pitch;
x_4: pitch angle.

and the components of command vector are:

u_1: general cyclic command;
u_2: longitudinal cyclic command.

For illustration purposes, we will consider the following faulty modes:

i) **Mode 2**: A total loss of the actuator 2;
ii) **Mode 3**: A total loss of the actuator 2 and a 50% power loss on the first actuator.

From above, we have that $S = \{1, 2, 3\}$, where the **mode 1** represents the nominal case. The failure process is assumed to have Markovian transition characteristics.

The actuator failure transition probability matrix is assumed to be:

$$[\alpha_{ij}] = \begin{bmatrix} 0.90 & 0.05 & 0.05 \\ 0 & 0.95 & 0.05 \\ 0 & 0 & 1 \end{bmatrix}$$

For the above NCS, and using the CCL algorithm with $\gamma^2_\infty = 10$, we obtain the following controllers:

$$\mathcal{K}_1 = \begin{bmatrix} 0.0006 & -1.5287 \\ -0.1081 & 4.6208 \end{bmatrix}, \; \mathcal{K}_2 = \begin{bmatrix} -0.0045 & -1.0311 \\ 0.0200 & -0.9393 \end{bmatrix}.$$

The state trajectories of the closed loop system resulting from the discretized model and the obtained controller are shown in Figure 2. These trajectories represent a single sample path simulation corresponding to a realization of the failure process

η_k and the random delay process r_{sk}. Figure 3 represents the evolution of the controlled outputs z_k. It can be seen that the closed-loop system is stochastically stable and that the disturbance attenuation is achieved.

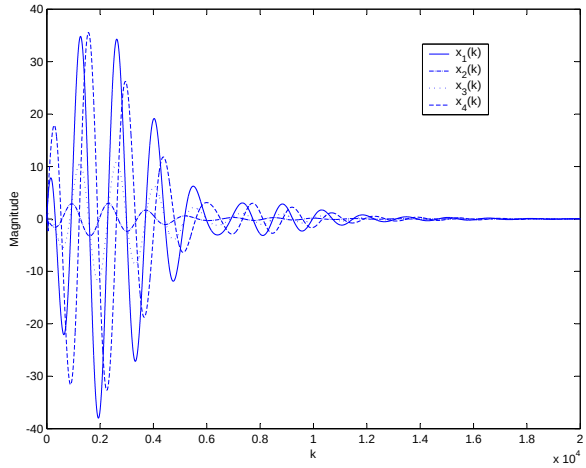

Figure 2. States of the closed loop system: single sample path simulation

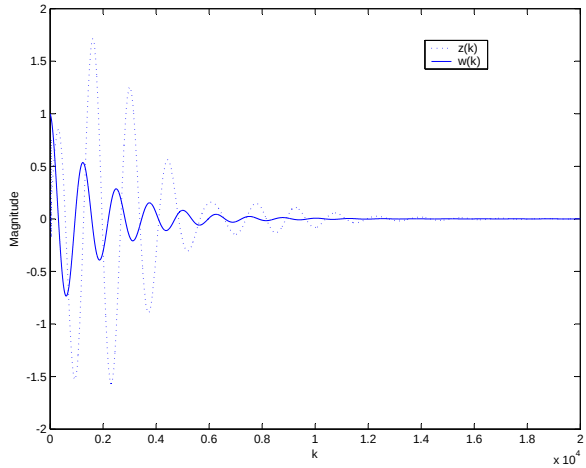

Figure 3. Evolution of the controlled output: single sample path simulation

6. CONCLUSION

In this paper, static output feedback stochastic stabilization and disturbance attenuation issues for a class of discrete-time Networked control systems (NCSs) subject to random failures and random delays was addressed under the discrete-time Markovian Jump Linear Systems framework. Results are formulated as matrix inequalities, one of which is nonlinear. The numerical resolution of the obtained results was done using a cone complementary algorithm. The effectiveness of the developed method was illustrated on a classical example from literature.

ACKNOWLEDGMENTS

This work is in part supported by European Union Project NeCST under grant No. EU-IST-2004-004303.

7. REFERENCES

Aberkane, S., D. Sauter and J.C. Ponsart (2005). $\mathcal{H}_\infty$ stochastic stabilization of active fault tolerant control systems: Convex approach. *44th IEEE Conference on Decision and Control and European Control Conference ECC 2005, Seville, Spain.*

Aberkane, S., J.C. Ponsart and D. Sauter (2006*a*). Multi-objectif output feedback control of a class of stochastic hybrid systems with state dependent noise. *Submitted.*

Aberkane, S., J.C. Ponsart, M. Rodrigues and D. Sauter (2006*b*). Ellipsoidal output-feedback sets for multi-objective control of a class of stochastic hybrid systems with state-dependent noise. *Submitted.*

Boukas, E. K. (1999). Exponential stabilizability of stochastic systems with markovian jumping parameters. *Automatica* **35**, 1437–1441.

Boukas, E. K. (2005). Stabilization of stochastic nonlinear hybrid systems. *Int. J. Innovative Computing, Information and Controll* **1**, 131–141.

Boukas, E. K. (2006). Static output feedback control for stochastic hybrid systems: Lmi approach. *Automatica.*

Costa, O. L. V., J. B. R. do Val and J. C. Geromel (1999). Continuous-time state-feedback H_2-control of Markovian jump linear systems via convex analysis. *Automatica* **35**(2), 259–268.

Costa, O. L. V., M. D. Fragoso and R. P. Marques (2005). *Discrete-Time Markov Jump Linear Systems.* Springer.

de Farias, D. P., J. C. Geromel, J. B. R. do Val and O. L. V. Costa (2000). Output feedback control of Markov jump linear systems in continuous-time. *IEEE Transaction on automatic control* **45**(5), 944–949.

de Oliveira, M. C. and J. C. Geromel (1997). Numerical comparison of output feedback design methods. *in Proceedings of the American Control Conference, Albuquerque.*

de Oliveira, M. C., J. Bernussou and J. C. Geromel (1999). A new discrete-time robus stability condition. *System and Control Letters* **37**, 261–265.

de Souza, C. E. and M. D. Fragoso (1993). $\mathcal{H}_\infty$ control for linear systems with markovian jumping parameters. *Control Theory and Advanced Technology* **9**(2), 457–466.

Dragan, V. and T. Morozan (2002). Stability and robust stabilization to linear stochastic systems described by differential equations with

markov jumping and multiplicative white noise. *Stochastic Analysis and Applications* **20**, 33–92.

Dragan, V., T. Morozan and A. Stoica (2004). $\mathcal{H}_2$ optimal control for linear stochastic systems. *Automatic* **40**, 1103–1113.

Ghaoui, L. El, F. Oustry and M. AitRami (1997). A cone complementary linearization algorithm for static output-feedback and related problems. *IEEE Transaction on automatic control* **42**(8), 1171–1176.

Ji, Y. and H. J. Chizeck (1990). Controllability, stabilizability, and continuous-time Markovian jump linear quadratic control. *IEEE Transaction on automatic control* **35**, 777–788.

Ji, Y. and H. J. Chizeck (1992). Jump linear quadratic Gaussian control in continuous time. *IEEE Transaction on automatic control* **37**(12), 1884–1892.

Jiang, B. and F. N. Chowdhury (2005). Fault estimation and accomodation for linear mimo discrete-time systems. *IEEE Transactions on Control Systems Technology* **13**, 493–499.

Krtolica, R., U. Ozguner, H. Chan, H. Goktas, J. Winkelman and M. Liubakka (1992). Stability of linear feedback systems with random communication delays. *International Journal of Control* **37**, 1884–1892.

Lin, H., G. Zhai and P. Antsaklis (2003). Robust stability and disturbance attenuation analysis of a class of networked control systems. *Proceedings of the* 42nd *IEEE Conference on Decision & Control* pp. 1182–1187.

Mahmoud, M., J. Jiang and Y. Zhang (2003). *Active Fault Tolerant Control Systems: Stochastic Analysis and Synthesis*. Springer.

Nilsson, J., B. Bernhardson and B. Wittenmark (1998). Stochastic analysis and control of real-time systems with random time delays. *Automatica* **34**(1), 57–64.

Shi, P. and E. K. Boukas (1997). H_∞-control for Markovian jumping lunear systems with parametric uncertainty. *Journal of optimization theory and applications* **95**(1), 75–99.

Shi, P., E. K. Boukas, S. K. Nguang and X. Guo (2003). Robust disturbance attenuation for discrete-time active fault tolerant control systems with uncertainties. *Optimal control applications and methods* **24**, 85–101.

Srichander, R. and B. K. Walker (1993). Stochastic stability analysis for continuous-time fault tolerant control systems. *International journal of control* **57**(2), 433–452.

Syrmos, V. L., C. T. Abdallah, P. Dorato and K. Grigoriadis (1997). Static output feedback: A survey. *Automatica* **33**(2), 125–137.

Walsh, C. C., H. Ye and L. G. Bushnell (2002). Stability analysis of networked control systems. *IEEE Transaction on Control Systems Technology* **10**(3), 438–446.

Xiao, L., A. Hassibi and J. P. How (2000). Control with random communication delays via discrete-time jump linear system approach. *Proceedings of the* 2000 *American Control Conference* pp. 2199–2204.

Xie, G. and L. Wang (2004). Stabilization of networked control systems with time-varying network-induced delay. *Proceedings of the* 43rd *IEEE Conference on Decision & Control* pp. 3551–3556.

Yu, M., L. Wang, T. Chu and G. Xie (2004). Stabilization of networked control systems with data packet dropout and network delays via switching system approach. *Proceedings of the* 43rd *IEEE Conference on Decision & Control* pp. 3539–3544.

Zhang, L., B. Huang and J. Lam (2003). $\mathcal{H}_\infty$ model reduction of markovian jump linear systems. *Systems and Control Letters* **50**, 103–118.

Zhang, L., Y. Shi, T. Chen and B. Huang (2005). A new method for stabilization of networked control systems with random delays. *IEEE Transaction on Control Systems Technology* **50**(8), 1177–1181.

Zhang, W., M. S. Branicky and S. M. Phillips (2001). Stability of networked control systems. *IEEE Control System Magazine* **21**(2), 84–99.

Zhang, Y. and J. Jiang (2003). Bibliographical review on reconfigurable fault-tolerant control systems. *IFAC SAFEPROCESS* pp. 265–276.