HAL
open science

Adaptive Linear Precoded DMT as an Efficient Resource Allocation Scheme for Power-Line Communications

Matthieu Crussière, Jean-Yves Baudais, Jean-François Hélard

To cite this version:

Matthieu Crussière, Jean-Yves Baudais, Jean-François Hélard. Adaptive Linear Precoded DMT as an Efficient Resource Allocation Scheme for Power-Line Communications. 2006, pp.5. hal-00084070

HAL Id: hal-00084070

https://hal.science/hal-00084070v1

Submitted on 5 Jul 2006

HAL is a multi-disciplinary open access archive for the deposit and dissemination of scientific research documents, whether they are published or not. The documents may come from teaching and research institutions in France or abroad, or from public or private research centers.

L'archive ouverte pluridisciplinaire **HAL**, est destinée au dépôt et à la diffusion de documents scientifiques de niveau recherche, publiés ou non, émanant des établissements d'enseignement et de recherche français ou étrangers, des laboratoires publics ou privés.

Adaptive Linear Precoded DMT as an Efficient Resource Allocation Scheme for Power-Line Communications

Matthieu Crussière, *Member, IEEE*, Jean-Yves Baudais, *Member, IEEE*, and Jean-François Hélard, *Senior Member, IEEE*

Electronics and Telecommunications Institute of Rennes (IETR) — UMR CNRS 6164
INSA — 20, Avenue des Buttes de Coësmes, CS 14215, 35043 Rennes Cedex, France
{matthieu.crussiere;jean-yves.baudais;jean-francois.helard}@insa-rennes.fr

***Abstract*— In this paper, we propose to apply adaptive loading principles to linear precoded digital multitone (LP-DMT). This new approach can especially be exploited in the powerline context, since it requires the knowledge of the channel at the transmitter. We first show that maximal waveform capacity is achieved when orthogonal matrices are used to linearly precode the multitone signal. A practical loading algorithm based on tone clustering is then developed to handle the configuration of the system. This algorithm assigns tones, size of precoding matrices, bits and energies in order to maximize the total throughput of the system. The optimization procedure is led under power spectral density (DSP) limitations and finite order modulations constraint. Through simulations over power line channels, it is shown that the new adaptive LP-DMT system takes advantage of the carrier merging effect offered by the precoding function and then outperforms the non-precoded DMT system.**

I. Introduction

Digital multi-tone (DMT) modulation, also known as orthogonal frequency division multiplexing, is a flexible and efficient solution to transmit information over wirelines [1]. By its remarkable robustness against frequency dispersive channels, DMT is in particular largely proposed for communications over the power grid, namely in the Homeplug standards. The main principle of DMT is to divide the bandwidth into multiple tones associated with subchannels that are intersymbol interference-free and independent additive white Gaussian noise. In a general approach, each tone can be assigned a given energy and be loaded with a given modulation, such as quadrature amplitude modulations (QAM). In order to ensure reliable communications, the loading pair constellation/energy must be driven by the signal-to-noise ratio (SNR) achieved per tone.

Contrary to wireless channels, wireline channels essentially offer quasi-static impulse responses, which implies that the channel state can be known at the transmitter side. Under this assumption, adaptive tone loading principles can advantageously be applied to DMT in the PLC context resulting in significative improvements in terms of system throughput or robustness [1]. Many discrete algorithms for allocating power and bits have been developed and are based on the well-known *waterfilling* approach. The first proposed [2] reaches the optimal solution using a greedy algorithm but leads to intensive computational complexity when the number of bits to be transmitted per DMT symbol is large. Many suboptimal algorithms with less computational complexity have since been developed (see, for example, [3] and references inside for an extensive overview). All these algorithms compute the bit loading tone per tone.

However, for long lines or deep fades, the tone SNR can drop under a certain threshold resulting in unload situations. Moreover, finite order constellations like QAM, combined with PSD limitations produce a quantification loss that implies a global achievable rate reduction. To circumvent these problems, fractionnal bits techniques exploiting trellis coded modulations with variable rates can be carried out, but lead to an important increase of complexity.

The purpose of this paper is to present a new method based on linear precoding (LP) principles and which achieves rate improvements by merging tones. The merging process consists in applying precoding matrices or equivalently spreading sequences to various clusters of tones. If judiciously done, each resulting cluster holds an equivalent SNR such that the total supported throughput is greater than the sum of the individual throughputs supported by each tone taken separately. In the proposed scheme, the LP function is then useful to reduce the constellation quantification loss and to use more available tones.

This paper is organized as follows. Section II presents the linear precoded multitone system model. Section III aims at finding the precoding sequences that should be applied to the DMT system in order to maximize the waveform capacity. From the stated result, section IV gives the optimal solution to the throughput maximization problem of the LP-DMT system within a given cluster. Section V gives the practical loading algorithm extended to the whole system, i.e. considering multiple clusters. The performance of the proposed scheme is given in section VI and compared to the performance obtained with the non-precoded DMT system. Finally, section VII concludes the paper.

Notations: In the following, upper (resp. lower) boldface symbols are used for matrices (resp. column vector), lower symbols represent scalar values. Besides, $(.)^T$ and $(.)^H$ denote transpose and Hermitian operators respectively, and $\boldsymbol{I}_N$ stands for the $N \times N$ identity matrix.

II. Adaptive LP-DMT system model

The studied system is based on the combination of DMT with linear precoding. Hereafter, we will use the terminology LP-DMT, in accordance with the classical LP-OFDM terminology [4]. In a general approach, the N-dimensionnal generated symbol vector $\boldsymbol{s}$ can be written as

$$\boldsymbol{s} = \boldsymbol{F}^H \, \boldsymbol{\mathcal{W}} \, \boldsymbol{x} \, . \tag{1}$$

Vector $\boldsymbol{x} = [x_1, \cdots, x_K]^T$ is the result of the serial to parallel conversion of the input data stream containing the K QAM-mapped symbols to transmit. $\boldsymbol{\mathcal{W}}$ stands for the $N \times K$ precoding matrix applied to $\boldsymbol{x}$ which precodes K symbols over N tones. The precoded symbol vector is finally multiplied by the $N \times N$ unitary Fourier matrix $\boldsymbol{F}$ that realizes the multitone modulation. N represents the number of tones used in the system. Note that for $\boldsymbol{\mathcal{W}} = \boldsymbol{I}_N$, the system amounts to the classical non-precoded DMT system.

Depending on the structure of the precoding matrix, it is in fact possible to precode the symbol stream following different strategies. In this paper, we focus on a particular instance of this broad category of LP-DMT signals where the precoding function is applied to different blocks or clusters of tones independently. The block model of the proposed LP-DMT system is depicted in Fig. 1 and the resulting signal is then

$$\boldsymbol{s} = \boldsymbol{F}^H \underbrace{\boldsymbol{Z} \cdot \begin{bmatrix} \boldsymbol{C}_1 & & 0 \\ & \ddots & \\ 0 & & \boldsymbol{C}_B \end{bmatrix}}_{\boldsymbol{\mathcal{W}} = \boldsymbol{Z}\boldsymbol{\mathcal{C}}} \cdot \begin{bmatrix} \boldsymbol{x}_1 \\ \vdots \\ \boldsymbol{x}_B \end{bmatrix} , \tag{2}$$

with B the number of clusters to consider. Matrices $\boldsymbol{C}_b = \{c_{l,k}\}_{1 \le l \le L_b,\ 1 \le k \le K_b}$ are the individual precoding matrices containing the K_b precoding sequences of length L_b to apply to each cluster $b = [1;B]$. Note that L_b is also equivalent to the size of the bth cluster, i.e. to the number of gathered tones in that cluster. From (1), we can write $\sum_b L_b = N$, and $\sum_b K_b = K$. $\boldsymbol{x}_b = [x_{b,1}, \cdots, x_{b,K_b}]^T$ are K_b-dimensionnal vectors of QAM symbols to be transmitted within the different clusters. We use M-QAM constellations of orders $m \in [1;15]$ like in digital subscriber line standards. Within each cluster, note that each QAM symbol $x_{b,k}$ is associated to a certain code sequence and assigned a certain energy $e_{b,k}$. Each QAM symbol can also be of various orders $m_{b,k} \in [1;15]$. Finally, $\boldsymbol{Z}$ is a permutation matrix that basically realizes an interleaving of the coded QAM symbols in the frequency domain. Consequently, one has to keep in mind that clusters are not necessarily made of adjacent tones.

The LP-DMT system can be viewed as a multiple-block MC-CDMA system (multicarrier code division multiple access) also referred to as SS-MC-MA (spread spectrum multicarrier multiple access) in the wireless context.

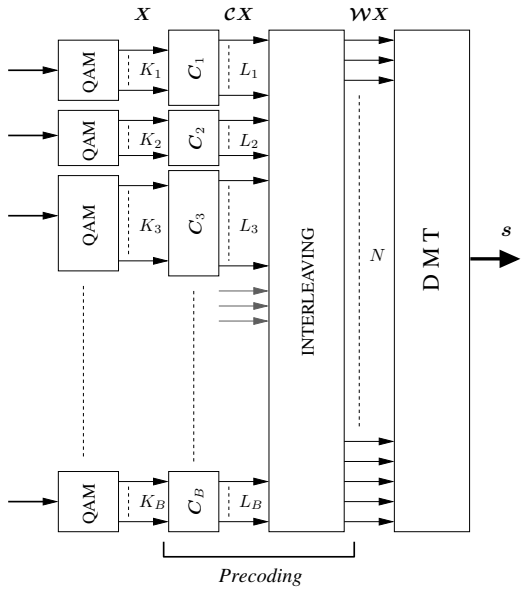

Fig. 1. Proposed LP-DMT transmitter

After classical cyclic prefix extension, the generated data stream is sent across the PLC channel. Assuming perfect synchronization and cyclic prefix removal at the receiver, the channel can be modeled by one single complex coefficient per tone [5]. After multitone demodulation the received signal is then

$$\boldsymbol{y} = \boldsymbol{H}\boldsymbol{\mathcal{W}}\boldsymbol{x} + \boldsymbol{n} \, , \tag{3}$$

where $\boldsymbol{H} = \mathrm{diag}\left([h_1, \cdots, h_N]\right)$ is the $N \times N$ diagonal complex matrix bearing on its diagonal the frequency domain channel gains associated to each tone $n \in [1;N]$. Vector $\boldsymbol{n}$ represents the additive white Gaussian noise such that $\mathrm{E}\left[\boldsymbol{n}\boldsymbol{n}^H\right] = \sigma_n^2 \boldsymbol{I}_N$. The channel effects are finally compensated for using a simple zero-forcing (ZF) equalizer before desinterleaving and despreading operations. Denoting $\boldsymbol{G} = \boldsymbol{H}^{-1}$ the diagonal equalization matrix, the received vector of data symbol $\boldsymbol{d}$ then writes

$$\boldsymbol{d} = \boldsymbol{\mathcal{W}}^{-1}\boldsymbol{G}\boldsymbol{y} \, . \tag{4}$$

III. Allocation problem formulation

A. Resource allocation principles for the proposed system

Resource allocation consists in judiciously adapting the free parameters of one system in order to maximize a certain objective function. From the above stated model, these parameters are the modulation orders $m_{b,k}$, the code sequence lengths L_b, the energies $e_{b,k}$ allocated to each sequence and the number of code sequences K_b within each cluster. Moreover, the clustering function can also be carried out in an adaptive manner. The general handling of all of these degrees of freedom is developed in the sequel. We are interested in maximizing the total throughput of the system under PSD limitations simply due to classical power mask specifications. Hereafter, perfect channel knowledge at both the transmitter and the receiver sides is assumed.

B. Optimal precoding sequences

Before deriving the throughput maximization problem formulation, let us see what kind of precoding sequences should be used in the system. Therefore, we propose to compute the mutual information of the LP-DMT waveform. Assuming information vectors $\boldsymbol{x}$ and $\boldsymbol{y}$ defined earlier as gaussian vectors, we have

$$I(\boldsymbol{x}|\boldsymbol{H},\boldsymbol{y}|\boldsymbol{H}) = \frac{1}{2}\log\det\Big(\underbrace{\boldsymbol{I}_N + \frac{1}{\sigma^2}\boldsymbol{H}\boldsymbol{\mathcal{W}}\boldsymbol{R}_{\boldsymbol{x}}\boldsymbol{\mathcal{W}}^H\boldsymbol{H}^H}_{\boldsymbol{A}}\Big) , \tag{5}$$

where $\boldsymbol{R}_{\boldsymbol{x}} = \mathrm{E}\left[\boldsymbol{x}\boldsymbol{x}^H\right]$ represents the data symbol covariance matrix of size $K \times K$. $\boldsymbol{R}_{\boldsymbol{x}}$ is a diagonal matrix with diagonal element e_u. Hence, using Hadamard inequality, it comes

$$\begin{aligned} |\det(\boldsymbol{A})| &= \left|\left(\delta_{n,m} + \frac{1}{\sigma_n^2}\sum_{u=1}^{K} h_n h_m^H w_{n,u} w_{m,u} e_u\right)_{1\le n,m\le N}\right| \\ &\le \prod_{n=1}^{N} ||\boldsymbol{a}_n||_2 , \end{aligned} \tag{6}$$

with $\boldsymbol{A} = [\boldsymbol{a}_1|\cdots|\boldsymbol{a}_N]$. This determinant is maximized if and only if vectors $\boldsymbol{a}_n$ are mutually orthogonal, i.e. $\forall n \neq m$ $\boldsymbol{a}_n^H\boldsymbol{a}_m = 0$. For all $n \neq m$,

$$\begin{aligned} \boldsymbol{a}_n^H\boldsymbol{a}_m &= \frac{2\Re(h_n h_m^H)}{\sigma_n^2}\sum_{u=1}^{K} w_{n,u}w_{m,u}e_u + \frac{h_n h_m^H}{\sigma_n^2} \\ &\times \sum_{i=1}^{N}\Big(\sum_{u=1}^{K} w_{i,u}w_{n,u}e_u \cdot \sum_{v=1}^{K} w_{i,v}w_{m,v}e_v\Big)|h_i|^2 . \end{aligned} \tag{7}$$

A sufficient condition to have $\boldsymbol{a}_n^H\boldsymbol{a}_m = 0$ is to use orthogonal precoding sequences. Exploiting the structure of matrix $\boldsymbol{\mathcal{C}}$ given in (2) and the fact that matrix $\boldsymbol{Z}$ is unitary as a permutation matrix, this sufficient condition amounts to choosing Hadamard matrices to construct individual precoding matrices $\boldsymbol{C}_b,\ b \in [1;B]$. Note however that there exist some other sequences, not necessarily orthogonal, that also lead to maximal mutual information.

C. Maximization problem

Applying the above stated result to the system model, the received symbol assigned to the kth code of the bth cluster can from (4) be straightforwardly expressed

$$d_{b,k} = x_{b,k} + \sum_{l=1}^{L_b} c_{l,k}\frac{n_{b,l}}{h_{b,l}} , \tag{8}$$

with $n_{b,l}$ and $h_{b,l}$ the noise sample and the channel gain associated to the lth tone of the bth cluster. At this point, many remarks can be put in:

1) Due to ZF equalization, orthogonality between the precoding sequences is restored at the receiver. Hence there exists intercode interference as evident from (8).
2) Owing to the form of the precoding matrix, each cluster exploits its own precoding sequences. This implies that no intercluster interference is to consider.

Consequently, the total throughput of the system is the sum of the individual rates related to each precoding sequence and each tone cluster. Hence, the total throughput of the proposed LP-DMT system simply writes

$$\begin{aligned} R_{\text{LP-DMT}} &= \sum_{b=1}^{B} R_b = \sum_{b=1}^{B}\sum_{k=1}^{K_b} R_{b,k} \\ &= \sum_{b=1}^{B}\sum_{k=1}^{K_b} I\left(x_{b,k}|h_{b,l}, d_{b,k}|h_{b,l}\right) , \end{aligned} \tag{9}$$

with R_b the throughput achieved within the bth cluster and $R_{b,k}$ the rate associated to the kth sequence of that cluster. Mutual information in (9) can simply be calculated using (8) and (5). Introducing classical SNR gap Γ which takes into account QAM modulation performances [1], reliable rate for the presented system is

$$R_{\text{LP-DMT}} = \sum_{b=1}^{B}\sum_{k=1}^{K_b}\log_2\left(1 + \frac{1}{\Gamma}\frac{L_b^2}{\sum_{l=1}^{L_b}\frac{1}{|h_{b,l}|^2}}\frac{e_{b,k}}{\sigma_n^2}\right) . \tag{10}$$

Denoting $\mathcal{S}_b,\ b \in [1;B]$ the tone sets resulting from the clustering operation, it is then possible to state the throughput maximization problem as

$$(P): \qquad \max_{\mathcal{S}_b,\, K_b,\, e_{b,k}} R_{\text{LP-DMT}} \tag{11}$$

$$w.r.t. \quad \begin{cases} (\text{C1})\ \mathcal{S}_b \bigcap \mathcal{S}_{b'} = \emptyset\ \forall b \neq b' , \\ (\text{C2})\ \sum_{k=1}^{K_b} e_{b,k} \le E,\ \forall b , \\ (\text{C3})\ K_b \le L_b,\ \forall b . \end{cases}$$

Constraint (C1) says that clusters have to be mutually exclusive, which is imposed by the precoding matrix structure (see (2)). Constraint (C2) is the mathematical writing of the PSD limitation, with E the maximal energy transmission level. Constraint (C3) is the classical sequence number limitation due to the use of orthogonal sequences.

One can verify that for $L_b = 1,\ \forall b$, B equals N and the system becomes equivalent to a classical non-precoded DMT system. Without any constraint about the modulation orders, i.e. $m_{b,k} \in \mathbb{R}$, it well known that DMT reaches channel capacity. This upper-bound turns out to be unreachable in the case of DSP limitations and discrete modulation restriction.

IV. Optimal bits, energies and codes allocation

Let us first focus on the optimal resource allocation within a given cluster of the LP-DMT system. The optimal allotment of bits, energies and codes have to be found considering a particular set of tones $\mathcal{S}_b$.

A. Rate upper-bound

Assuming $R_{b,k} \in \mathbb{R}$, the maximal throughput achieved within the bth cluster of the LP-DMT system is obtained

through classical Lagrange optimization applied to R_b. We get

$$R_b^* = L_b \ \log_2 \left(1 + \frac{1}{\Gamma} \frac{L_b}{\sum_{l=1}^{L_b} \frac{1}{|h_{b,l}|^2}} \frac{E}{\sigma_n^2} \right). \tag{12}$$

Then, the optimal loading procedure consists in achieving a uniform distribution of bits and energy between the K_b available codes in each cluster. In that case, we have $e_{b,k} = E/L_b$, and $R_{b,k} = R_b^*/L_b$. This throughput is the rate upper-bound of the LP-DMT system which remains lower than or equal to that of the DMT system obtained with $L_b = 1, \ \forall b$.

B. Discrete modulations

The above obtained optimal allocation leads to non-integer modulation orders, and R_b^* is an upper-bound that is reached if and only if $\lfloor R_b^*/L_b \rfloor = R_b^*/L_b$. In the case of finite order modulations, the following proposition gives the optimal allocation.

Proposition 1: Let denote $\mathcal{R}$ the bit allocation policy. For a given tone cluster b, the throughput of the system is maximized if and only if $\mathcal{R}$ assigns $(\lfloor R_b^*/L_b \rfloor + 1)$ bits to n_b codes and $\lfloor R_b^*/L_b \rfloor$ bits to $(L_b - n_b)$ codes, where $n_b = \lfloor L(2^{R_b^*/L_b - \lfloor R_b^*/L_b \rfloor} - 1) \rfloor$.

Proposition 1 confirms the intuitive idea that the optimal allocation is reached with a bit and energy distribution as uniform as possible. In order to keep this paper concise, the proof of Proposition 1 is not developed (see [6] for details). Proposition 1 also gives the number K_b of code sequences to use in the precoding matrix $\boldsymbol{C}_b$. The energies related to the achieved rates $R_{k,b}$ are computed from (11)

$$e_{k,b} = \frac{\Gamma}{L_b^2} \sum_{l=1}^{L_b} \frac{\sigma_n^2}{|h_{l,b}|^2} \left(2^{R_{k,b}} - 1\right) \tag{13}$$

Eventually, the allocation procedure for throughput maximization is fairly simple and requires the computation of R_b^*, n_b and of only two values of rates $R_{b,k}$ and energies $e_{b,k}$.

V. Clustering optimization

From Proposition 1, the optimal allocation is known within each cluster. The clustering strategy has now to be established. Clustering consists in forming different tone sets of various sizes. This section focuses on finding the optimal tone distribution policy and the optimal size for each cluster.

A. Tone ordering

The following proposition gives the optimal tone distribution strategy to adopt in the case of throughput maximization.

Proposition 2: The tone sets $\mathcal{S}_b$ that maximize the throughput are such that $\forall b \neq b'$, $\forall l \in [1;L_b]$, $\forall l' \in [1;L_{b'}]$, $|h_{b,l}| \geq |h_{b',l'}|$.

One checks that any tone swapping between two subsets $\mathcal{S}_b$ and $\mathcal{S}_{b'}$ given by the proposition leads to a rate loss. This is done through the derivative study of a sum of logarithm functions using (11) and (12).

A practical solution to verify the proposition is to sort the available tones in descending order of power gain. Each cluster is then formed from adjacent sorted tones. This simple strategy remains valid whatever the size L_b of each cluster may be.

B. Practical code length optimization

The last optimization concerns the choice of the different cluster size L_b. Finding these optimal code lengths amounts to a complex combinatorial optimization problem that can not be reduced to an equivalent convex problem. Thus, no analytical solution exists and optimal solution can only be obtained following exhaustive search. Because of prohibitive computations, we propose two practical approaches that can instead be followed:

1) all the clusters have the same size $L_b = L, \ \forall b$ which should be judiciously chosen;
2) each cluster has its own size which is obtained using a greedy procedure.

The choice of the fixed cluster size L will be argued in section VI. Concerning the second approach, a cost function has to be used to localy optimize the throughput. The objective is to increase LP-DMT throughput relatively to the upper-bound related to non-precoded DMT. Let us denote R_{DMT}^* this DMT rate upper-bound

$$R_{\text{DMT}}^* = \sum_{b=1}^{B} R_b^* \quad \text{with} \quad \forall b \ L_b = 1 \ . \tag{14}$$

Recall that R_b^* is given by (12), and $B = N$ with $L_b = 1$. The cost function then writes

$$\arg \min_{L_b} \left(\frac{R_{\text{DMT}}^* - \sum_{k=1}^{K_b} R_{b,k}}{R_{\text{DMT}}^*} \right) . \tag{15}$$

This cost function has just to be iteratively applied to define each cluster size. Each $R_{b,k}$ in (15) results from optimal allocation following Prop. 1. The first cluster is made of the tones with the best channel gains and the last one is made of the tones with the lowest channel gains, given that tones have been sorted first. This approach is much more expensive than the first one but should offer better results.

VI. Simulation results

The generated LP-DMT signal is composed of $N = 1880$ tones transmitted in the band $[1.6\,;20]$ MHz. The possible code lengths for Hadamard matrices are $L_b \in \{1, 2, 4n | n \in \mathbb{N}\}$. Since the smallest unknown order is 668 [7], we chose $L_c < 668$. For simulations, we use a power line channel response that have been measured in an outdoor PLC network by the french power company *Électricité de France* (EDF). The frequency response of this channel is presented Fig. 2. The transmission level is -40 dBm/Hz and the AWGN background noise level is -110 dBm/Hz. All the following results are given versus channel attenuation A expressed in dB.

The throughput of the DMT system is given Fig. 3 and expressed in kbit per DMT symbol. In the same figure, the

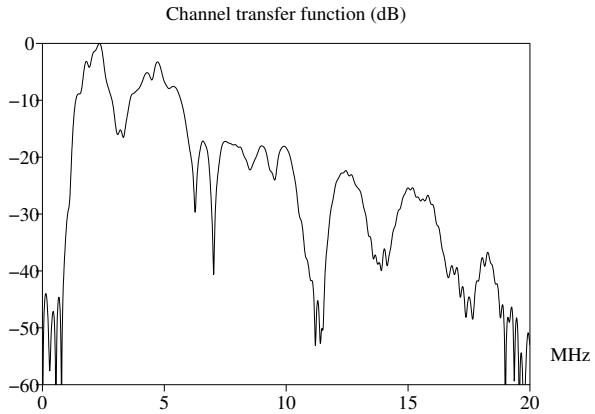

Fig. 2. PLC frequency channel response

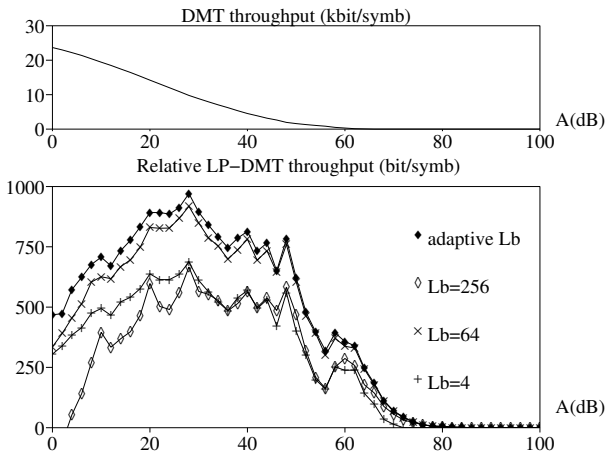

Fig. 3. Throughput of DMT and LP-DMT system vs. channel attenation

LP-DMT throughputs are given relatively to those obtained with DMT. Four precoded systems are evaluated with fixed ($\forall b,\ L_b \in \{4, 64, 256\}$) and adaptive code lengths. It clearly appears that the achieved throughputs are improved when linear precoding is used. In fact, each cluster of the LP-DMT system holds an equivalent SNR such that the total supported throughput is greater than the sum of the individual throughputs supported by each tone. The energy available on each tone is aggregated within each cluster and then mutually exploited to transmit higher rates.

When L_b is not adaptively obtained, we note that there exists an optimal cluster size. If L_b is too small (e.g. $L_b = 4$), the energy merging effect is not fully exploited, while if L_b is too large (e.g. $L_b = 256$), the noise amplification due to ZF detection reduces the rate gain. With adaptive L_b, each cluster size is chosen to realize the better tradeoff between tone merging gain and noise amplification. Consequently, the LP-DMT signal with adaptive L_b gives the best results for all channel attenuations. With $L_b = 64$, we note however that the simple fixed-length solution gives very satisfying results compared to the L_b adaptive one.

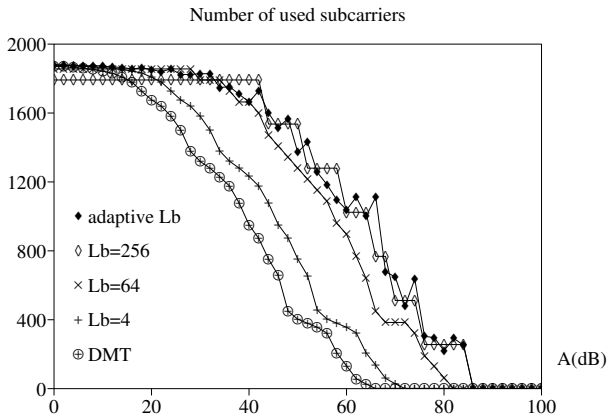

Fig. 4. Number of used tones of DMT and LP-DMT system vs. channel attenation

Fig. 4 gives the number of used tones for each precoded and non-precoded systems. We conclude that the linear precoding function allows to exploit more tones than DMT. Unloaded tones corresponds to poor channel gains. With attenuations above 70 dB for example, all the tones hold SNR lower than 0 dB, which implies that DMT is not able to transmit any bits. At the contrary, the precoded systems exploit the spread spectrum function to offer an aggregate SNR larger than 0 dB to the different clusters. LP-DMT systems can then transmit some bits where non-precoded DMT fails.

VII. Conclusion

Adaptive loading principles have been applied to LP-DMT and practical loading algorithms have been proposed to maximize the system throughput. These algorithms are based on a tone merging strategy resulting from judiciously formed clusters. Under DSP limitations and finite order modulations constraint, it has been shown that the new system takes advantage of the tone merging offered by the precoding function and is able to increase the total transmitted rate compared to classical non-precoded system. The rate gain comes from the reduction of the constellation quantification loss and the increase of the number of used tones.

References

[1] J. Cioffi, "A multicarrier primer," ANSI T1E1.4/91–157, Committee contribution, Tech. Rep., 1991.

[2] D. Hughes-Hartogs, "Ensemble modem structure for imperfect transmission media," U.S. Patent 4 679 227, July, 1987.

[3] C. Wong, R. Cheng, K. Letaief, and R. Murch, "Multiuser OFDM with adaptive subcarrier, bit, and power allocation," *IEEE Journal on Selected Area in Communications*, vol. 17, no. 10, pp. 1747–1758, Oct. 1999.

[4] Z. Wang and G. Giannakis, "Linear precoded or coded OFDM against wireless channel fades?" Mar. 2001, pp. 267–270.

[5] S. Hara and R. Prasad, "Overview of multicarrier cdma," *IEEE Communications Magazine*, vol. 35, no. 12, pp. 126–133, Dec. 1997.

[6] M. Crussière, J.-Y. Baudais, and J.-F. Hélard, "Adaptive spread spectrum multicarrier multiple access over wirelines," *to be published in IEEE Journal on Selected Area in Communications (J-SAC), special issue* powerline communications, July 2006.

[7] A. S. Hedayat, N. J. A. Sloane, and J. Stufken, *Orthogonal Arrays: Theory and Applications*. Springer-Verlag, New York, 1999, ch. 7.