HAL
open science

Orthogonal STBC MC-CDMA system with channel estimation over realistic high mobility MIMO channels

Stephan Sand, Fabrice Portier, Jean-François Hélard

To cite this version:

Stephan Sand, Fabrice Portier, Jean-François Hélard. Orthogonal STBC MC-CDMA system with channel estimation over realistic high mobility MIMO channels. 2006. hal-00082817

HAL Id: hal-00082817

https://hal.science/hal-00082817v1

Submitted on 21 Jul 2006

HAL is a multi-disciplinary open access archive for the deposit and dissemination of scientific research documents, whether they are published or not. The documents may come from teaching and research institutions in France or abroad, or from public or private research centers.

L'archive ouverte pluridisciplinaire **HAL**, est destinée au dépôt et à la diffusion de documents scientifiques de niveau recherche, publiés ou non, émanant des établissements d'enseignement et de recherche français ou étrangers, des laboratoires publics ou privés.

WIRELESS WORLD
RESEARCH FORUM

Orthogonal STBC MC-CDMA System with Channel Estimation over Realistic High Mobility MIMO Channnels

Stephan Sand[1], Fabrice Portier[2], and Jean-François Hélard[2]
[1]German Aerospace Center, Institute of Communications and Navigation, Oberpfaffenhofen, 82234 Wessling, Germany – stephan.sand@dlr.de
[2]Institute of Electronics and Telecommunications in Rennes INSA, 20 Ave. des Buttes de Coësmes, 35043 Rennes Cedex, France – fabrice.portier@insa-rennes.fr

***Abstract*— This paper considers a downlink multiple-input multiple-output (MIMO) multi-carrier code division multiple access (MC-CDMA) system with pilot aided channel estimation (PACE) and iterative channel estimation (ICE) in the receiver. Exploiting orthogonal space-time block coding (STBC), we investigate ICE schemes as a simple extension of PACE using estimated data chips as additional pilots. Due to the superposition of different users' spread data signals, zero-valued chips can occur after spreading, which can cause noise enhancement when using data estimates as reference signals in ICE. Hence, we propose MIMO channel estimation methods to overcome the above problem. Simulations results for PACE and ICE were computed for a realistic outdoor MIMO channel model and high data rates. They demonstrate that ICE can nearly double the throughput compared to PACE for high data rates.**

***Index Terms*— channel estimation, MC-CDMA, MIMO channel model, STBC**

Introduction

Orthogonal frequency division multiplexing (OFDM) [1] is a suitable technique for broadband transmission over multipath fading radio channels achieving high data rates. In addition to the coherent OFDM modulation, spreading in frequency or time direction is introduced for multi-carrier code division multiple access (MC-CDMA). MC-CDMA is a promising candidate for the downlink of future mobile communication systems and has been implemented in experimental systems by NTT DoCoMo [2] and the European IST projects MATRICE [3] and 4MORE [4]. High data rate MC-CDMA systems can additionally employ multiple-input and multiple-output (MIMO) techniques, e.g., the Alamouti space-time block code (STBC) [5].

Coherent STBC OFDM systems require channel state information (CSI) at the receiver. Thus, pilot symbols are often periodically inserted into the transmitted signal to support channel estimation (CE). First, CE is performed using the least-squares (LS) algorithm on pilots only; then we interpolate these localized estimates (LEs) on the time-frequency grid, exploiting correlations of the time- and frequency-selective radio channel. In case of pilot aided channel estimation (PACE), the interpolation is achieved by cascading two one-dimensional (1D) finite-impulse response (FIR) filters whose coefficients are based on the minimum mean square error (MMSE) criterion [1].

To further improve PACE, [6], [7], and [8] use previously decided data symbols as reference in iterative channel estimation (ICE). In [7], the authors propose an ICE algorithm for OFDM that feeds back information from the output of the channel decoder to the estimation stage to reduce decision feedback errors. Since the CE gets additional information from the estimated data symbols, ICE achieves a further reduction of the bit error rate (BER).

Previously, we proposed several MIMO

This research has been supported by the European Network of Excellence NEWCOM and the European IST-Project 4MORE.

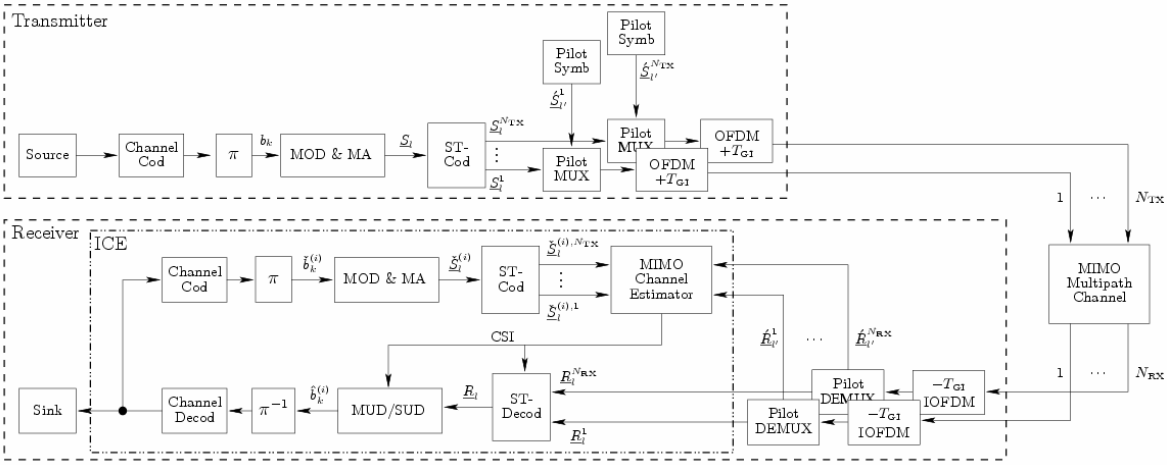

(a) MIMO MC-CDMA: transmitter and receiver with ICE

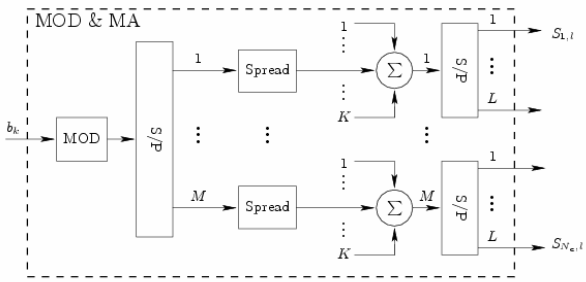

(b) Modulation and multiple access: MOD & MA

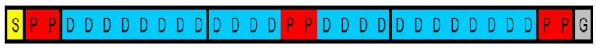

(c) Downlink frame: S = synchronization, G = Guard, P = Pilot, and D = data OFDM symbol

Fig. 1. Downlink MIMO MC-CDMA system with ICE

MC-CDMA systems and studied the effect of CE errors on these 4th Generation (4G) schemes [9]. In [8], we proposed SISO ICE methods. In this paper, we extend the idea of ICE to a MIMO MC-CDMA system with Walsh-Hadamard (WH) spreading codes, and propose modified LS (MLS) methods to solve the problem of zero-valued chips after spreading. At the transmitter, we employ orthogonal STBCs, such as the Alamouti scheme. We compare the performance of PACE and ICE for a downlink MIMO MC-CDMA system with two transmit and two receive antennas. Simulation results are obtained for a realistic outdoor MIMO channel based on the 3GPP/SCM MIMO channel model [10], [11].

System model

Fig. 1 represents the block diagram of the downlink MIMO MC-CDMA system with ICE. At the transmitter, a binary signal of a single user out of K active users is encoded by a channel coder and interleaved by a random bit interleaver. The bits b_k (Fig. 1(b)) are modulated and serial-to-parallel converted to M data symbols per user in an OFDM symbol. After spreading with a WH sequence of length L ($L \le K$), the spread signals are combined and serial-to-parallel converted to form the data symbol vector $\underline{S}_l = \left[S_{1,l},\ldots,S_{N_c,l}\right]^T$ ($l \in \mathscr{D}$). In this paper, $N_c = M \cdot L$ denotes the number of subcarriers per OFDM symbol, l the OFDM symbol number, and $\mathscr{D}$ the set of data symbol positions in a frame. Next, $\underline{S}_l$ (Fig. 1(a)) is space-time coded and each $\underline{S}_l^m$ ($l \in \mathscr{D}$, $m = 1,\ldots,N_{TX}$) is multiplexed together with pilot symbols $\dot{\underline{S}}_{l'}^m$ ($l' \in \mathscr{P}$, $m = 1,\ldots,N_{TX}$). $\mathscr{P}$ denotes the set of all pilot symbol positions in a frame. Here, N_{TX} subsequent full OFDM pilot symbols are inserted at the beginning, in the middle and at the end of each frame (Fig. 1(c)). For each transmit antenna, a unique WH spreading code is applied to the pilot symbols in time direction. If the time variation of the channel is small enough over the consecutively spread pilots, the pilot symbols for each transmit antenna can be despread at the receiver to obtain LEs of the CSI. Here, we as-

sume that the pilot and data sets are disjoint, i.e., $\mathcal{P} \cap \mathcal{D} = \varnothing$. The resulting N_{TX} frames with N_c subcarriers and N_s OFDM symbols are OFDM modulated and cyclically extended by the guard interval (GI) before they are transmitted over a time-variant MIMO multipath channel, which adds white Gaussian noise.

The received symbols are shortened by the GI and OFDM demodulated for each of the N_{RX} receive antennas. Then, the received pilot symbols $\underline{\dot{R}}_{l'}^{p}$ $(l' \in \mathcal{P},\ p = 1,\ldots,N_{RX})$ are separated from the received data symbols $\underline{R}_{l}^{p}$ $(l \in \mathcal{D})$, and fed into the CE. In the initial iteration (i = 0), the CE only uses pilot symbols to estimate the CSI. After demultiplexing and space-time decoding the received data symbols $\underline{R}_{l}^{p}$ $(l \in \mathcal{D})$, either one multi-user detector (MUD) or K single-user detector (SUD) blocks return soft-coded bits $\hat{b}_k^{(i)}$ of all users [8]. Subsequently, the bits are used to reconstruct the transmit signal $\underline{\breve{S}}_{l}^{(i),m}$ $(l \in \mathcal{D},\ m = 1,\ldots,N_{TX})$, in ICE (Fig. 1(a)).

In the ith iteration of ICE (i > 0), the CE exploits the received pilot symbols $\underline{\dot{R}}_{l'}^{p}$ $(l' \in \mathcal{P})$, the received data symbols $\underline{R}_{l}^{p}$ $(l \in \mathcal{D})$, and the reconstructed transmit signal $\underline{\breve{S}}_{l}^{(i),m}$ $(l \in \mathcal{D})$ to improve the accuracy of the CSI estimates. The newly obtained CSI estimates are fed back to the space-time decoder and the MUD/SUD block to improve the estimates of the transmitted bits. The next section describes PACE and ICE and investigates how ICE needs to be adapted for a downlink MIMO MC-CDMA system using orthogonal STBCs.

CHANNEL ESTIMATION

Pilot Aided Channel Estimation (PACE)

Since the pilot symbols for different antennas are transmitted on the same positions, we first need to compute LEs of the CSI for each pair of transmit and receive antenna. For notational convenience, we drop the subcarrier and symbol index. N_{TX} consecutive pilot symbols in time direction at each transmit antenna are then given by

$$\begin{bmatrix} \dot{S}_1^m \\ \vdots \\ \dot{S}_{N_{TX}}^m \end{bmatrix} = \underline{w}_m \cdot \dot{S}, \qquad (1)$$

where $\underline{w}_m$ is column m of the N_{TX} × N_{TX} WH spreading matrix [1] and $\dot{S}$ is a pilot symbol. Note, $\underline{w}_m^{\mathrm{T}} \underline{w}_p$ is one only for m = p and otherwise zero. The averaged LE $\breve{H}^{m,p}$ of the channel transfer function between transmit antenna m and receive antenna p of the pilot symbol block is obtained by the LS estimate; i.e., we despread the N_{TX} consecutively received pilot symbol $\dot{R}_1^p,\ldots,\dot{R}_{N_{TX}}^p$ with the WH spreading vector $\underline{w}_m$

$$\breve{H}^{m,p} = \frac{1}{\dot{S}} \underline{w}_m^{\mathrm{T}} \begin{bmatrix} \dot{R}_1^p \\ \vdots \\ \dot{R}_{N_{TX}}^p \end{bmatrix}. \qquad (2)$$

Assuming that the channel is approximately constant for the length of $\underline{w}_m$, we verify

$$\breve{H}^{m,p} = H^{m,p} + \frac{1}{\dot{S}} \underline{w}_m^{\mathrm{T}} Z^p, \qquad (3)$$

where Z^p denotes an equivalent additive white Gaussian noise component at receive antenna p.

The final estimates of the channel transfer function are obtained from the LEs $\breve{H}_{n',l'}^{m,p}$ by two-dimensional (2D) filtering:

$$\hat{H}_{n,l}^{m,p} = \sum_{\{n',l'\} \in \mathcal{T}_{n,l}} \omega_{n',l'} \breve{H}_{n',l'}^{m,p}, \qquad \forall \{n,l\} \in \mathcal{P}, \qquad (4)$$

where $\omega_{n',l'}$ is the 2D FIR filter. The subset $\mathcal{T}_{n,l} \subseteq \mathcal{P}$ is the set of LEs $\breve{H}_{n',l'}^{m,p}$ used to obtain $\hat{H}_{n,l}^{m,p}$.

The optimum solution of (4) in the MSE sense is the 2D Wiener filter [1]. Assuming the delay and Doppler power spectral densities (PSDs) to be statistically independent, the 2D filter can be replaced by two cascaded 1D filters, one for filtering in frequency and one for filtering in time direction. Since in practice the channel statistics are not perfectly known at the receiver, the CE filters are designed robust using for example a uniform Doppler PSD ranging from $-f_{D_{FIR}}$ to $f_{D_{FIR}}$. Note, the maximum Doppler frequency $f_{D,max}$ of the channel can be different from the maximum Doppler frequency $f_{D_{FIR}}$ of the CE filters.

Iterative Channel Estimation (ICE): localized estimates (LEs)

We investigate ICE in detail for a MIMO MC-CDMA system. After reconstructing the transmitted signal from the estimated information bits, the estimated data symbols and the transmitted pilot symbols form the set $\mathcal{P}_{\mathrm{ICE}} = \mathcal{P} \cup \mathcal{D}$ of reference symbols known at the receiver. The set $\mathcal{P}_{\mathrm{ICE}}$ defines the complete frame of pilot and data symbols. When employing orthogonal STBCs, we can exploit the orthogonality to compute $\breve{H}^{(i),m,p}$. In the case of the Alamouti scheme, (2) becomes for the data estimates

$$\begin{bmatrix} \breve{H}^{(i),1,p} \\ \breve{H}^{(i),2,p} \end{bmatrix} = \frac{\sqrt{2}}{\left(\mathcal{S}^{(i)}\right)^2} \begin{bmatrix} \breve{S}_1^{(i)} & \breve{S}_2^{(i)} \\ -\left(\breve{S}_2^{(i)}\right)^* & \left(\breve{S}_1^{(i)}\right)^* \end{bmatrix}^{\mathrm{H}} \cdot \begin{bmatrix} R_1^p \\ R_2^p \end{bmatrix},$$

$$\left(\mathcal{S}^{(i)}\right)^2 = \left|\breve{S}_1^{(i)}\right|^2 + \left|\breve{S}_2^{(i)}\right|^2 + 1/\gamma, \tag{5}$$

with $1/\gamma = 0$ to obtain the LS LEs. Setting γ equal to the signal-to-noise ratio (SNR) results in the biased MMSE LEs.

Note that due to the superposition of WH spread data signals, $\breve{S}_1^{(i)}$ and $\breve{S}_2^{(i)}$ can be both zero. For instance, a zero-valued chip occurs with 2% probability for a 4-QAM symbol alphabet and a WH spreading code of length 32. Consequently, if we do not want to cause small amplitude chips noise enhancement in ICE, we need to take special care when computing the LEs at the data symbol positions. Therefore, we propose two solutions to compute channel estimates $\breve{H}^{(i),m,p}$ with a compromise between performance and extra complexity.

MLS1) Our first simple solution will avoid noise enhancement in each iteration of ICE:

$$\begin{bmatrix} \breve{H}^{(i),1,p} \\ \breve{H}^{(i),2,p} \end{bmatrix} = \begin{cases} \dfrac{\sqrt{2}}{\left(\mathcal{S}^{(i)}\right)^2} \begin{bmatrix} \breve{S}_1^{(i)} & \breve{S}_2^{(i)} \\ -\left(\breve{S}_2^{(i)}\right)^* & \left(\breve{S}_1^{(i)}\right)^* \end{bmatrix}^{\mathrm{H}} \cdot \begin{bmatrix} R_1^p \\ R_2^p \end{bmatrix} & \text{if } \left(\mathcal{S}^{(i)}\right)^2 > \rho_{\mathrm{th}}, \\ \begin{bmatrix} 0 \\ 0 \end{bmatrix} & \text{if } \left(\mathcal{S}^{(i)}\right)^2 \le \rho_{\mathrm{th}}. \end{cases} \tag{6}$$

However, if the MLS1 estimation is applied directly to (4) for data estimates, the CE will be biased as the average input power of the received reference symbols has changed. To avoid this bias, we introduce a weighting factor between the computation of LEs in (5) and the subsequent filtering in (4), acting as reliability in the following.

MLS2) Our second solution respects the reliability of $\breve{H}^{(i),m,p} = \left(\mathcal{S}^{(i)}\right)^2$. (7)

Consequently, the filter coefficients in (4) when exploiting (7) will be recomputed as

$$\omega_{n',l'}^{\mathrm{R}} = \frac{1}{\sum\limits_{\{n'',l''\} \in \mathcal{T}_{n,l}} \left(\mathcal{S}_{n'',l''}^{(i)}\right)^2 \omega_{n'',l''}} \left(\mathcal{S}_{n',l'}^{(i)}\right)^2 \omega_{n',l'} \quad \forall \{n',l'\} \in \mathcal{T}_{n,l}. \tag{8}$$

Thus, we avoid noise enhancement for small amplitude values of the data estimates and the biased estimate.

Iterative Channel Estimation (ICE): Complete Algorithm

For ICE with one or more iterations ($i > 0$), the following steps have to be executed in each iteration:

1. Reconstruct the transmit signal $\underline{\breve{S}}_l^{(i),m}$ $\forall l \in \mathcal{D}$ from the estimated information bits. Note that we used hard decision decoding in the simulations.
2. Calculate the LEs $\underline{\breve{H}}_l^{(i),m,p}$ $\forall l \in \mathcal{D}$ according to (5) or (6).
3. Obtain the final estimate of the channel transfer function between transmit antenna m and receive antenna p through filtering the LEs over the set $\mathcal{P}_{\mathrm{ICE}}$ of all reference symbols, i.e.,

$$\hat{H}_{n,l}^{(i),m,p} = \sum_{\{n',l'\} \in \mathcal{T}_{n,l}} \omega_{n',l'}^{(i)} \breve{H}_{n',l'}^{(i),m,p}, \quad \mathcal{T}_{n,l} \subseteq \mathcal{P}_{\mathrm{ICE}},\ \forall \{n',l'\} \in \mathcal{D}, \tag{9}$$

where $\omega_{n',l'}^{(i)}$ is the Wiener filter coefficient obtained for iteration i. To simplify the process, we will first use a 1D filter in frequency direction over adjacent subcarriers. The coefficients are pre-computed from a robust Wiener filter. If we chose the MLS2 solution the frequency filter coefficients for the 1D filter in frequency direction are multiplied in addition with the reliability $\left(\mathcal{S}^{(i)}\right)^2$ as in (8). Next, another 1D robust Wiener filter in time direction is applied over adjacent OFDM symbols.

4. Use the newly estimated CSI $\hat{H}_{n,l}^{(i),m,p}$ from (9) in the subsequent space-time decoder and MUD/SUD block to obtain new estimates of the information bits.

SIMULATIONS

This section presents simulation results for a downlink MIMO MC-CDMA system applying WH spreading and Alamouti STBC, with two transmit and two receive antennas, and perfect CE (PCE), PACE, or ICE.

Simulation Parameters

At a carrier frequency of f_c = 5.2 GHz, the MC-CDMA systems transmits 32 OFDM symbols per frame (Fig. 1(a)) divided into 768 useful data subcarriers over a bandwidth of 46.2 MHz resulting in a subcarrier spacing of Δf = 60 kHz. The size of the fast Fourier transforms in the OFDM modulation and demodulation is 1024. Thus, the sampling duration is T_{spl} = 1/61.44 MHz = 16.276 ns. The guard interval T_{GI} is set to 256 T_{spl}. The system uses a R_c = 1/2 convolutional mother code with generator polynomials $(561, 753)_8$ punctured to a rate R_c = 3/4, 64-QAM symbols with Gray mapping, and WH spreading codes of length L = 32. Except for the single-user bound (SUB), where we use maximum-ratio combining (MRC) and 1 active user, K = 32 users transmit in parallel M = 24 data symbols per OFDM symbol that are not frequency interleaved. Six pilot symbols are inserted into the frame as in Fig. 1(c), clustering two consecutive pilot symbols and spacing the clusters 12 data symbols apart. So out of the total 32 OFDM symbols in a frame 24 symbols are dedicated to data transmission. The resulting data rate is 124.4 Mbit/s for 64-QAM, R_c = 3/4.

In the simulations the channel is based on 3GPP/SCM definition [3], [10] for a MIMO channel exploiting multipath angular characteristics. This model provides realistic PSDs and correlations based on the sum of rays approach. The model parameters are adapted to the 5.2 GHz carrier frequency and use the BRAN E average power delay profile [11], which refers to a typical outdoor urban multi-path propagation. A velocity of 180 km/h corresponds to a maximum Doppler frequency $f_{D,max}$ = 867 Hz. The two antennas at the base station are spaced 10 λ apart and the two antennas at the mobile terminal 0.5 λ apart. Resultant correlations in frequency, time and space are detailed in [12], with their effect on MIMO MC-CDMA detection.

To provide a realistic solution, we focus on a low complexity detection, i.e., Alamouti MMSE SUD [12], and show the results in the worst case of fully-loaded system with 32 users. Average power of data and pilots is the same, and we use a limited set of coefficients for filters, assuming the same values whatever the modulation, noise, and iteration i, to verify the robustness of our solutions with parameter mismatches. Since the system proposal uses full pilot OFDM symbols, frequency filtering mainly mitigates noisy estimates; thus, we generally use 3 coefficients at high SNR. For PACE, a robust Wiener filter is then applied in time direction with 3 coefficients to compute the final estimates in (4) from the 3 LEs in (2). The Doppler PSDs are assumed uniformly distributed with a maximum frequency $f_{D,max}$. To maintain a low filtering complexity in ICE, we mainly apply (9) with 3 or 5 coefficients in time direction, on consecutive localized pilot and data estimates.

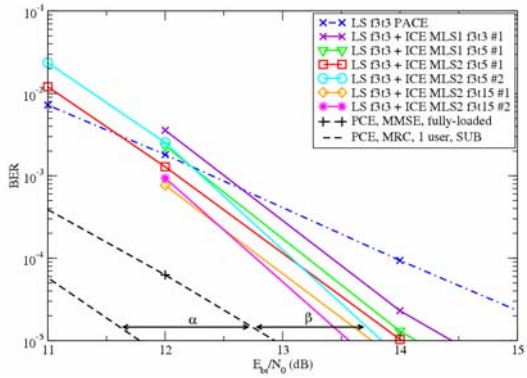

Fig. 2: Performance of 64-QAM, R_c=3/4, 180km/h.

Simulation Results

In the results, E_{bt}/N_0 denotes the total energy per bit over the average noise spectral density at each receive antenna. In the legend fXtY denotes the X and Y filtering size in frequency and time, and #i the number of iterations i.

Fig. 2 compares the performance of PCE, PACE and ICE for a fully-loaded system. Solid lines represent the BER results of ICE schemes, and show that our solution MLS2 with a filtering over 3 subcarriers and 15 time coefficients provides the best performance. The slope of the curves increases with i. When the channel is in a deep fade, the error propagation of the hard decision feedback degrades BER performance. However, at high SNR, the degradation β gets down below 1 dB for BER ≤ 10^{-5}. Our MLS2 solution with a filtering on only 3 subcarriers and 5 time coefficients presents good results. The channel estimation error (CEE) for PACE at high E_{bt}/N_0 is dominated by the interpolation error between the LEs in time direction.

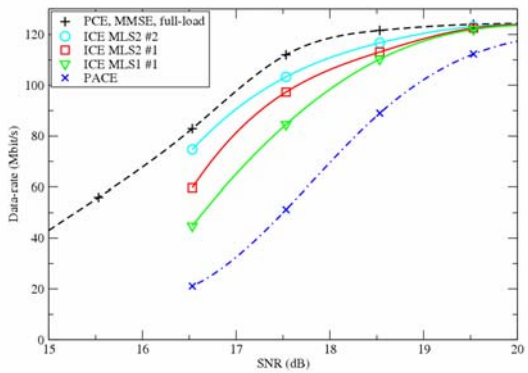

Fig. 3: Throughput for different CE and 64QAM R_c=3/4.

Thus, a good filtering in time and additional LEs using MLS reduces the interpolation error in (9) and ICE outperforms PACE at the cost of increased complexity.

As a remark, CEE, BER and FER are not behaving the same way. In the configuration of Fig. 2, while the gain from PACE to ICE is around 0.6 dB to obtain BER = 10^{-4} and is only slightly increasing with iterations, the gain is superior to 2 dB for FER and increases with *i*. Iterations allow to gather packets of errors, and remove scattered errors. Thus, we propose as better measure of performance for packetbased transmissions the throughput versus SNR in Fig. 3, computed from perfectly received frames [10]. At a given SNR, the data rate can double using ICE MLS2 compared to PACE for the high data rate and high speed scenario. For instance, at 17.5 dB, PACE can hardly provide 50 Mbit/s while ICE MLS1 provides 84 Mbit/s. MLS2 can offer 13 or 19 extra Mbit/s with 1 or 2 iterations respectively, and this difference increases with speed.

SUMMARY AND CONCLUSIONS

In this paper, we present a downlink MIMO MC-CDMA system with WH spreading codes and orthogonal STBCs using PACE and ICE at the receiver. At high speeds, high data rate scenarios become very sensitive to channel variations. In addition to a good filtering in time, high modulations require channel tracking; then, ICE is the unique solution to get close to PCE. Since the superposition of WH spread data signals can result in zero-valued chips, we propose methods to use estimates of the transmitted data as reference signals for ICE without implying noise enhancement at each iteration. Our MLS2 solution combined with robust filtering presents better throughput performance than traditional LS or MMSE LEs without causing high complexity and avoiding error propagation and noise enhancement. As a result, MLS2 shows a faster convergence than the other MLS solution. Moreover, this tradeoff preserves the use of a simple robust Wiener filter optimized for unbiased LEs, allowing pre-computed coefficients. We do not need to optimize a threshold or measure precise channel parameters like noise or PSDs. Simulation results demonstrate that ICE can nearly double the throughput compared to PACE for high data rates.

To conclude, this work is a first step towards high data rate solutions, and further optimizations can fill the gap to PCE. In particular, an adaptation of the filtering with iterations and soft decision feedback should reduce the effect of error propagation. Besides, the iterative receiver should benefit from using the soft decision feedback as a-priori information in the detector and demodulator.

REFERENCES

[1] K. Fazel and S. Kaiser, *Multi-Carrier and Spread Spectrum Systems*. John Wiley and Sons, 2003.

[2] Y. Kishiyama, et. al., "Experiments on throughput performance above 100-Mbps in forward link for VSF-OFDCDM broadband packet wireless access," in *Proc. of IEEE VTC'F03*, Oct. 2003.

[3] IST-MATRICE project: http://www.ist-matrice.org.

[4] IST-4MORE project: http://www.ist-4more.org.

[5] S. M. Alamouti, "A simple transmit diversity technique for wireless communications," *IEEE J. Select. Areas Commun.*, Oct. 1998.

[6] V. Mignone and A. Morello, "CD3-OFDM: A novel demodulation scheme for fixed and mobile receivers," *IEEE Trans. Commun.*, Sept. 1996.

[7] F. Sanzi, S. Jelting, and J. Speidel, "A comparative study of iterative channel estimators for mobile OFDM systems," *IEEE Trans. Wireless Commun.*, Sept. 2003.

[8] S. Sand, R. Raulefs, and G. Auer, "Iterative channel estimation for high mobility broadband MC-CDMA systems," in *Proc. of IEEE ICC'2005*, Seoul, Korea, May 2005.

[9] F. Portier, I. Raos, A. Silva, J.-Y. Baudais, J.-F. Hélard, A. Gameiro, and S. Zazo, "Transmission techniques for downlink multi-antenna MC-CDMA systems in a Beyond-3G context," *J. of Communications and Networks*, Jun. 2005.

[10] 3GPP2 TR 25.996, "Network spatial channel model for multiple input multiple output simulations (release 6)," Apr. 2003.

[11] ETSI, "Broadband Radio Access Networks (BRAN); HIPERLAN Type 2; Physical Layer," Dec. 2001.

[12] F. Portier, J.-Y. Baudais, and J.-F. Hélard, "Performance of STBC MC-CDMA systems over outdoor realistic MIMO channels," in *Proc. of IEEE VTC'F04*, Los Angeles, USA, Sept. 2004.