HAL open science

Rigorous generalization of Young's law for heterogeneous and rough substrates

Joël de Coninck, Salvador Miracle-Solé, Jean Ruiz

▶ **To cite this version:**

Joël de Coninck, Salvador Miracle-Solé, Jean Ruiz. Rigorous generalization of Young's law for heterogeneous and rough substrates. Journal of Statistical Physics, 2003, 111, pp.107-127. hal-00003157

HAL Id: hal-00003157

https://hal.science/hal-00003157v1

Submitted on 24 Oct 2004

HAL is a multi-disciplinary open access archive for the deposit and dissemination of scientific research documents, whether they are published or not. The documents may come from teaching and research institutions in France or abroad, or from public or private research centers.

L'archive ouverte pluridisciplinaire **HAL**, est destinée au dépôt et à la diffusion de documents scientifiques de niveau recherche, publiés ou non, émanant des établissements d'enseignement et de recherche français ou étrangers, des laboratoires publics ou privés.

Rigorous generalization of Young's law for heterogeneous and rough substrates

J. De Coninck,[1] S. Miracle–Solé,[2] and J. Ruiz[3]

Abstract: We consider a SOS type model of interfaces on a substrate which is both heterogeneous and rough. We first show that, for appropriate values of the parameters, the differential wall tension that governs wetting on such a substrate satisfies a generalized law which combines both Cassie and Wenzel laws. Then in the case of an homogeneous substrate, we show that this differential wall tension satisfies either the Wenzel's law or the Cassie's law, according to the values of the parameters.

Key words: SOS models, Wenzel's law, Cassie's law, wetting, roughness, interfaces.

1 Introduction

The wettability of surfaces plays an important role in many technological processes. Since Young's work, two centuries ago, one usually characterizes the wetting properties of a surface by measuring the associated contact angle (see Fig. 1) of a reference sessile drop, of a liquid B on the surface W (also

Preprint CPT–2002/P.4381, published in J. Stat. Phys. **111**, 107–127 (2003)

[1]Centre de Recherche en Modélisation Moléculaire, Université de Mons–Hainaut, 20 place du Parc, B-7000 Mons, Belgium.
E-mail address: `Joel.De.Coninck@galileo.umh.ac.be`

[2]Institut des Hautes Etudes Scientifiques, F-91440, Bures-sur-Yvette, France. Permanent address: Centre de Physique Théorique, CNRS, Luminy case 907, F-13288 Marseille Cedex 9, France.
E-mail address: `Salvador.Miracle-Sole@cpt.univ-mrs.fr`

[3]Centre de Recherche en Modélisation Moléculaire, Université de Mons–Hainaut, 20 place du Parc, B-7000 Mons, Belgium. Permanent address: Centre de Physique Théorique, CNRS, Luminy case 907, F-13288 Marseille Cedex 9, France.
E-mail address: `Jean.Ruiz@cpt.univ-mrs.fr`

called substrate or wall) in equilibrium inside a medium A, leading to the classical Young's equation

$$\tau_{AB} \cos\theta = \tau_{AW} - \tau_{BW} \tag{1.1}$$

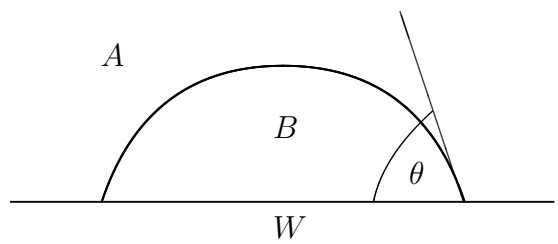

Fig. 1: Young's contact angle

where τ_{ij} refers to the interfacial tension between the two media i and j and θ is the equilibrium contact angle of the droplet on the substrate W. It is assumed here that τ_{AB} is isotropic (an irrelevant hypothesis in the present study which concerns the right hand side of equation (1.1)).

In the general case of an orientation dependent surface tension for the AB–interface, the equilibrium shape of the sessile drop is determined by the Winterbottom's construction [W]. As a consequence of this construction the contact angle θ satisfies, in dimension $d = 1$, the modified Young's equation:

$$\cos\theta\, \tau_{AB}(\mathbf{n}) - \sin\theta\, \frac{\partial}{\partial\theta} \tau_{AB}(\mathbf{n}) = \tau_{AW} - \tau_{BW} \tag{1.2}$$

where $\mathbf{n} = (-\sin\theta, \cos\theta)$. This equation as well as the validity of Winterbottom's construction has been proved from microscopic arguments, within the 1-dimensional Solid-On-Solid models in [DD] [DDR] [MR]. For a truly microscopic model, the 2-d Ising model (rather than a coarsed-grained one like the SOS) a first proof of the modified equation (1.2) was given in [AK]. For this model the validity of Winterbottom's construction was shown in [PV]. More recent proofs which hold in any dimensions are given in [BIV] [DGI] (see also references therein).

Equation (1.2) holds for flat and homogeneous surfaces. However, in practice a real surface is all except flat and homogeneous. It is therefore important to generalize this equation to take into account the real surfaces.

It is known experimentally that whenever the surface is chemically heterogeneous, say containing two species 1 and 2, a possible good equation is the Cassie's law [C] given by

$$\tau_{AW} - \tau_{BW} = c(\tau_{AW_1} - \tau_{BW_1}) + (1-c)(\tau_{AW_2} - \tau_{BW_2}) \tag{1.3}$$

where c (resp. $1-c$) denotes the surface concentration of the specie 1 (resp. 2). This leads to

$$\cos\theta_{12} = c\cos\theta_1 + (1-c)\cos\theta_2 \tag{1.4}$$

whenever the equilibrium contact angles θ_1, θ_2, and θ_{12} can be obtained.

For rough substrates, one often uses the Wenzel's law [W]

$$\cos\theta_{|r} = r\cos\theta_{|1} \tag{1.5}$$

where r refers to the roughness of the surface defined as the ratio of the area A of the surface and the area $\bar{A}$ of its projection on the horizontal plane.

In the present paper, we consider a SOS model and we extend these results obtaining a generalized equation. It reduces to Cassie's equation whenever the substrate is flat but heterogeneous and to Wenzel's equation whenever the substrate is homogeneous but rough.

Let us stress that we assume within this approach that we are dealing with equilibrium contact angles. The case of dynamics will be developed elsewhere.

The paper is organized as follows. The model is introduced in Section 2. The generalized Young's relation for rough and heterogeneous substrates is given in section 3. In section 4, we consider a particular geometry of an homogeneous wall and show that there is a transition between a Wenzel's regime and a Cassie's regime. The proofs of the results are given in the appendix.

2 The model

To describe the $A|B$ interface between liquid and air for instance, we consider a SOS type model on a d–dimensional lattice, $d = 1, 2$, defined as follows. At each site i of a finite box $\Lambda \subset \mathbb{Z}^d$, we assign an integer variable h_i which represents the height of the interface at this site. To a configuration $\mathbf{h} = \{h_i\}_{i\in\Lambda}$, we associate its graph to be denoted Γ. Its area (or length) is $|\Gamma| = |\Lambda| + \sum_{\langle i,j\rangle\subset\Lambda} |h_i - h_j|$, where the sums runs over all pairs of nearest neighbours of Λ.

We want here to study this interface on top of a substrate which is both *heterogeneous* and *rough*. The substrate is thus represented by another SOS interface W, union of two disjoint subsets W_1 and W_2, with disjoint projections $\Lambda_1 \subset \Lambda$ and $\Lambda_2 = \Lambda\backslash\Lambda_1$, and respective height configurations $\{h_i^{(1)}\}_{i\in\Lambda_1}$, and $\{h_i^{(2)}\}_{i\in\Lambda_2}$. We let $\bar{h}_i = h_i^{(1)}$ when $i \in \Lambda_1$ and $\bar{h}_i = h_i^{(2)}$ when $i \in \Lambda_2$.

This wall W as well as W_1, W_2, Λ_1, and Λ_2 are assumed to be periodic with periodicity $\mathbf{a} = (a_1, ..., a_d) \in (\mathbb{Z}^+)^d$, that is $h_i^{(1)} = h_{i+\mathbf{a}}^{(1)}$ and $h_i^{(2)} = h_{i+\mathbf{a}}^{(2)}$.

The respective roughness r_1 and r_2 read

$$r_k = \frac{|W_k|}{|\Lambda_k|} = 1 + \frac{\sum_{\langle i,j\rangle\subset\Lambda_k} |h_i^{(k)} - h_j^{(k)}|}{|\Lambda_k|}, \qquad k = 1, 2$$

The energy of the system is defined by

$$H_\Lambda(\Gamma, W) = J_{AB}|\Gamma \setminus (\Gamma \cap W)| + J_{AW_1}|\Gamma \cap W_1| + J_{AW_2}|\Gamma \cap W_2| \\ + J_{BW_1}|W_1 \setminus (\Gamma \cap W_1)| + J_{BW_2}|W_2 \setminus (\Gamma \cap W_2)| \quad (2.1)$$

Here Γ is above W, which means $h_i \geq \bar{h}_i$ for all i. and $k = 1$ or 2. The set $\Gamma \setminus (\Gamma \cap W)$ is relative to the AB microscopic interface, $\Gamma \cap W_1$ (resp. $\Gamma \cap W_2$) is relative to the contact zone between A and W_1 (resp. W_2), and $W_1 \setminus (\Gamma \cap W_1)$ (resp. $W_1 \setminus (\Gamma \cap W_2)$) is relative to the contact zone between B and W_1 (resp. W_2).

This system describes a system of droplets of a phase B inside a medium A on top of the wall W. J_{AB}, J_{AW_1}, J_{AW_2}, J_{BW_1}, and J_{BW_2} are the energies per unit area of the corresponding microscopic interfaces (see Fig. 2).

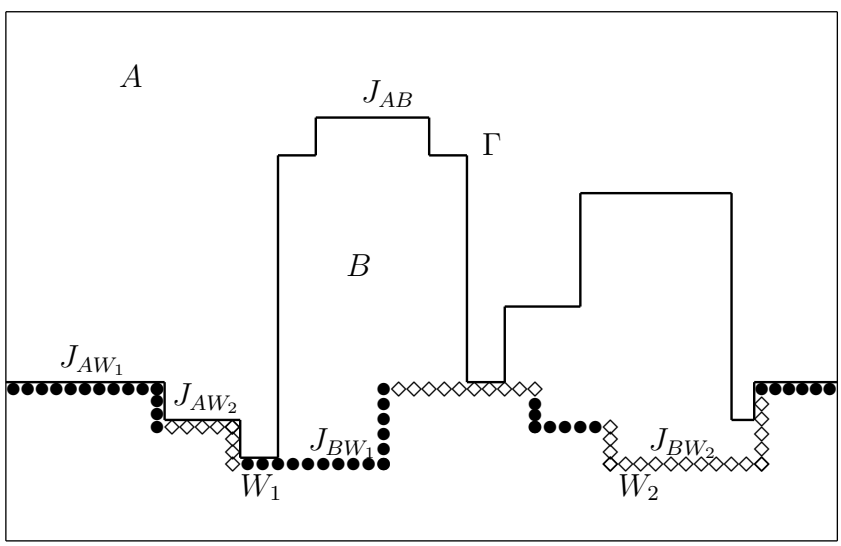

Fig. 2: A configuration of the interface Γ on the substrate $W = W_1 \cup W_2$.

Let us introduce the different free energies associated to the corresponding macroscopic interfaces. To define the free energy associated to the AB interface corresponding to a given slope $\mathbf{n}$ (a unit vector of $\mathbb{R}^{d+1}$), we introduce the Gibbs ensemble $G(\mathbf{n}, \Lambda)$ which consists of all configurations with the boundary condition

$$h_i = [\mathbf{n} \cdot i], \quad i \in \partial\Lambda$$

where $[\mathbf{n} \cdot i]$ denotes the integer part of the scalar product $\mathbf{n} \cdot i$, and the boundary $\partial\Lambda$ is the set of sites of Λ that have a nearest neighbour in $\mathbb{Z}^d \setminus \Lambda$. We will take Λ to be the parallelepipedic box $\Lambda = \{i \in \mathbb{Z}^d : |i_k| \leq N a_k, k = 1, \ldots, d\}$.

The surface tensions τ_{AB} and τ_{AW} are defined by the following thermodynamic limits

$$\tau_{AB}(\mathbf{n}) = \lim_{N\to\infty} -\frac{1}{\beta S_n(\Lambda)} \log \sum_{\Gamma \in G(\mathbf{n},\Lambda)} \exp\left[-\beta J_{AB}|\Gamma|\right] \tag{2.2}$$

where $S_n(\Lambda)$ is the area of the part of the hyperplane orthogonal to $\mathbf{n}$ passing through the origin and included in the infinite cylinder of $\mathbb{R}^{d+1}$ with basis Λ and,

$$\tau_{AW} = \lim_{N\to\infty} -\frac{1}{\beta|\Lambda|} \log \sum\nolimits^{*} \exp[-\beta H_\Lambda(\Gamma, W)] \tag{2.3}$$

where the sum $\sum^*$ runs over all configurations such that $h_i = \bar{h}_i$ for all $i \in \partial\Lambda$. Finally,

$$\tau_{BW} = \lim_{N\to\infty} \frac{J_{BW_1}|W_1| + J_{BW_2}|W_2|}{|\Lambda|} = r_1 c_1 J_{BW_1} + r_2 c_2 J_{BW_2} \tag{2.4}$$

where $c_1 = |\Lambda_1|/|\Lambda|$ and $c_2 = (1 - c_1) = |\Lambda_2|/|\Lambda|$ are the respective concentrations of W_1 and W_2.

That the limits exist follows from known arguments, see e.g. [DD, MMR]. In dimension one, the proof of (1.2) as well as the proof of the Winterbottom's construction for the model under consideration may be obtained by an appropriate extension of the theory developed in [DDR] [MR] in the case of a flat and homogeneous substrate.

3 The generalized Young's relation

Consider a drop of a phase B on top of the substrate W in a medium A. Three cases may appear: first, either the liquid B is always in contact with W or, second, there may be droplets of A between the liquid and W, or, finally, the medium A has no contact with the wall. Within our SOS model, these situations mean, first, that the ground state of the Hamiltonian of the system is given by the microscopic interface Γ that coincides with the substrate W, second, that the ground state microscopic interface Γ leaves holes between Γ and W, and, third, that the ground state microscopic interface Γ has no contact with the wall.

In this section we develop the first case and generalize to heterogeneous substrates Theorem 3.1 of [DMR], on the validity of Wenzel's law for a rough but homogeneous substrate. We obtain a combination of both, Cassie's and Wenzel's laws.

To this end, we introduce the energy difference

$$H'_\Lambda(\Gamma \mid W) = H_\Lambda(\Gamma, W) - H_\Lambda(W, W) \tag{3.1}$$

Since $H_\Lambda(W,W) = J_{AW_1}|W_1| + J_{AW_2}|W_2| = (r_1c_1J_{AW_1} + r_2c_2J_{AW_2})|\Lambda|$ the differential wall tension $\Delta\tau \equiv \tau_{AW} - \tau_{BW}$ reads

$$\Delta\tau = r_1c_1(J_{AW_1} - J_{BW_1}) + r_2c_2(J_{AW_2} - J_{BW_2}) + \lim_{N\to\infty} -\frac{1}{\beta|\Lambda|}\log Z_\Lambda \tag{3.2}$$

where

$$Z_\Lambda = \sum_\Gamma e^{-\beta H'_\Lambda(\Gamma|W)} \tag{3.3}$$

Our first step is to write Z_Λ as the partition function of a gas of elementary excitations, simply also called excitations, which can be viewed as microscopic droplets over the substrate. These excitations are defined as follows. Given Γ and W, we consider the symmetric difference

$$\Delta = (\Gamma \cup W) \setminus (\Gamma \cap W) \tag{3.4}$$

We decompose Δ into its maximal connected components δ_i, called excitations, $\Delta = \delta_1 \cup \delta_2 \cup \cdots \cup \delta_n$. Here, two components are said connected if they are connected considered as subsets of $\mathbb{R}^{d+1}$. A set $\{\delta_1, \delta_2, \ldots, \delta_n\}$ of mutually disjoint excitations is called an admissible family of excitations. Then there exists a microscopic interface (SOS configuration) Γ, such that $\Delta = \delta_1 \cup \delta_2 \cup \cdots \cup \delta_n$ satisfies (3.4), namely

$$\Gamma = (\Delta \cup W) \setminus (\Delta \cap W) \tag{3.5}$$

This correspondence between the admissible families of excitations and interface SOS configurations is one-to-one.

The energy difference H'_Λ reads in terms of families of excitations as

$$H'_\Lambda(\Gamma \mid W) = E(\delta_1) + \cdots + E(\delta_n) \tag{3.6}$$

where

$$E(\delta) = J_{AB}|\delta\setminus(\delta\cap W)| - (J_{AW_1} - J_{BW_1})|\delta\cap W_1| - (J_{AW_2} - J_{BW_2})|\delta\cap W_2| \tag{3.7}$$

Indeed from the definitions (2.1) (3.1) we have

$$H'_\Lambda = J_{AB}|\Gamma \setminus (\Gamma \cap W)| - (J_{AW_1} - J_{BW_1})|W \setminus (\Gamma \cap W_1)| \\ - (J_{AW_2} - J_{BW_2})|W \setminus (\Gamma \cap W_2)|$$

which together with $|\Gamma \setminus (\Gamma \cap W)| = |\Delta \setminus (\Delta \cap W)|$, $|W \setminus (\Gamma \cap W_1)| = |\Delta \cap W_1|$ and $|W \setminus (\Gamma \cap W_2)| = |\Delta \cap W_2|$ gives the expression (3.7) of the energy of excitations. Then

$$Z_\Lambda = \sum_{\Delta = \{\delta_1, \ldots, \delta_n\}} \prod_{i=1}^{n} e^{-\beta E(\delta_i)} \tag{3.8}$$

where the sum runs over admissible families of excitations included in the infinite cylinder Ω_Λ with basis Λ, $\Omega_\Lambda = \{(x_1, \ldots, x_{d+1}) \in \mathbb{R}^{d+1} : |x_k| \leq N a_k, k = 1, \ldots, d\}$, and the product is taken equal to 1 if $\Delta = \emptyset$.

In the concept of excitation that we are considering, the configuration $\Gamma = W$, in which the microscopic interface is following the wall, is the ground state of the system. In other words, we assume that $H'_\Lambda(\Gamma \mid W) > 0$ for all Γ and N, or equivalently, that

$$\min_\delta E(\delta) > 0 \tag{3.9}$$

In fact it is enough that this condition is satisfied for all excitations belonging to the set $\Omega(\mathbf{a}) = \{(x_1, \ldots, x_{d+1}) \in \mathbb{R}^{d+1} : 0 \leq x_k \leq a_k, k = 1, \ldots, d\}$.

We next consider arbitrary families of elementary excitations non necessarily mutually compatible and in which a given excitation can appear several times. To any such family $\{\delta_1, \ldots, \delta_n\}$ a graph $G(\delta_1, \ldots, \delta_n)$ is associated in such a way that to each excitation corresponds (in a one-to-one way) a vertex of the graph, and there is an edge joining the vertices corresponding to δ_i and δ_j whenever δ_i and δ_j are not compatible or coincide. We introduce the *clusters* C as the non-empty arbitrary families of excitations for which the associated graph $G(\delta_1, \ldots, \delta_n)$ is connected (this means that the excitations draw a connected set in $\mathbb{R}^2$). Then we get

$$\log Z_\Lambda = \sum_C \Phi^T(C) \tag{3.10}$$

where the sum runs over all clusters whose excitations belong to the infinite cylinder with basis Λ. The truncated functionals Φ^T are defined by

$$\Phi^T(\delta_1, \ldots, \delta_n) = \frac{a(\delta_1, \ldots, \delta_n)}{n!} \prod_{i=1}^{n} e^{-\beta E(\delta_i)} \tag{3.11}$$

$$a(\delta_1, \ldots, \delta_n) = \sum_{G \subset G(\delta_1, \ldots, \delta_n)} (-1)^{\ell(G)} \tag{3.12}$$

Here the sum runs over all connected subgraphs G of $G(\delta_1, \ldots, \delta_n)$, whose vertices coincide with the vertices of $G(\delta_1, \ldots, \delta_n)$, and $\ell(G)$ is the number of edges of the graph G. If the cluster C contains only one excitation then $a(\delta) = 1$.

To express condition (3.9) in terms of the coupling constants, we need a description of the substrate. Let Γ_z be the horizontal line at height z, that is $h_i = z$ for all i. For any integer z such that $\inf_i \bar{h}_i + 1 \leq z \leq \sup_i \bar{h}_i$, the difference $W \setminus \Gamma_z$ splits into components that lies either below or above Γ_z. They are called wells in the first case and we denote them by $w_k(z)$, and protrusions in the second case (see Fig. 3). We let $w_k^0(z)$ denote the projection of $w_k(z)$ on Γ_z and $\delta_k(z) = w_k^0(z) \cup w_k(z)$. We define

$$\alpha_1 = \max_{z,k} \frac{|\delta_k(z) \cap W_1|}{|\delta_k(z)|}, \quad \alpha_2 = \max_{z,k} \frac{|\delta_k(z) \cap W_2|}{|\delta_k(z)|} \tag{3.13}$$

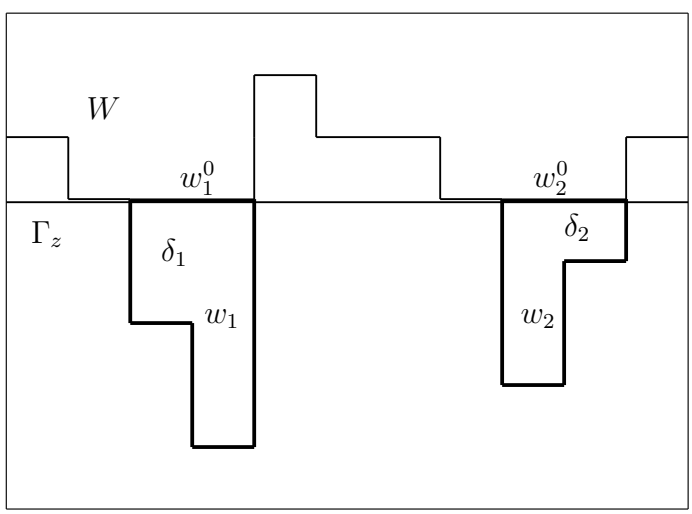

Fig. 3: The wells w_k, their projections, w_k^0 and the associated excitations $\delta_k(z)$.

Then condition (3.9) reads

$$C \equiv J_{AB} - \alpha_1(J_{AB} + J_{AW_1} - J_{BW_1}) - \alpha_2(J_{AB} + J_{AW_2} - J_{BW_2}) > 0 \tag{3.14}$$

Let $\overline{W}$ denote the infinite periodic wall whose restriction to Ω_Λ is given by the previous height $\{h_i^{(1)}\}_{i\in\Lambda_1}$, $\{h_i^{(2)}\}_{i\in\Lambda_2}$, let $W_{\mathbf{a}}$ denote its restriction to $\Omega(\mathbf{a})$, and let $\nu_1 = 3$, $\nu_2 = 12^2$.

Theorem 1 *Assume that the condition (3.14) is satisfied, then, for any* $\beta C > \log \nu_d + 0.74$*, the following series, defining the differential wall tension, is absolutely convergent*

$$\Delta\tau = r_1 c_1 (J_{AW_1} - J_{BW_1}) + r_2 c_2 (J_{AW_2} - J_{BW_2}) - \frac{1}{\beta a_1 \cdots a_d} \sum_{b \in W_{\mathbf{a}}} \sum_{C \ni b} \frac{\Phi^T(C)}{|C \cap \overline{W}|} \tag{3.15}$$

The proof of the theorem is postponed to the appendix. It establishes a generalized law for rough and heterogeneous substrates:

$$\Delta\tau = r_1 c_1 (\Delta\tau)_1^* + r_2 c_2 (\Delta\tau)_2^* + O(e^{-\beta C}) \tag{3.16}$$

where $(\Delta\tau)_1^*$ and $(\Delta\tau)_2^*$ correspond to the case of a flat wall of the species 1 and 2 respectively.

A consequence of this result is that in the case of a rough and heterogeneous wall both, the Wenzel's and the Cassie's laws, apply. These laws are satisfied up to a small temperature dependent correction (tending exponentially to zero with the temperature).

Referring to isotropic surfaces, one gets in terms of contact angles

$$\cos\theta = r_1 c_1 \cos\theta_1^{\text{flat}} + r_2 c_2 \cos\theta_2^{\text{flat}} + O(e^{-\beta C}) \tag{3.17}$$

proving from microscopic argument the validity of eq. (9.3) in [SL].

The conditions for the validity of Theorem 1 are twofold. The restriction to low temperatures is of a technical nature and stems from the conditions needed to ensure the convergence of the used low temperature expansions. The condition (3.14) on the coupling parameters ensures that the ground state of the system coincides with the wall. Let us mention the study on Cassie's law proposed in [DT] whose results do not rely on the knowledge of ground states. This condition is intimately related to the physics of the problem, and one may ask what happens whence increasing $J_{AW_1} - J_{BW_1}$ and $J_{AW_2} - J_{BW_2}$. This is the subject of the next section.

4 Transition between Cassie's and Wenzel's regime

We will restrict our analysis to the case of an homogeneous substrate. Namely, we assume $W_2 = \emptyset$, $J_{AW_1} = J_{AW}$, $J_{BW_1} = J_{BW}$, and $J_{AW_2} = J_{BW_2} = 0$. Moreover we will first consider simple geometries for the wall. We let the

periodicity be a in all directions. In dimension $d = 2$, we choose for any $i \in \{(i_1, i_2) \in \mathbb{Z}^2 : 0 \le i_1 \le a-1, 0 \le i_2 \le a-1\}$,

$$\bar{h}_i = \begin{cases} -b & \text{for} \quad 0 \le i_1 \le c-1, \quad \text{and} \quad 0 \le i_2 \le c-1 \\ 0 & \text{otherwise} \end{cases} \tag{4.1}$$

The other heights are given by the periodicity: $\bar{h}_{(i_1+na, i_2+na)} = \bar{h}_{(i_1,i_2)}$ see Fig. 4. In dimension $d = 1$, we choose $\bar{h}_i = -b$ if $0 \le i \le c-1$, $\bar{h}_i = 0$ if $c \le i \le a-1$, the periodicity giving the other heights : $\bar{h}_{i+na} = \bar{h}_i$.

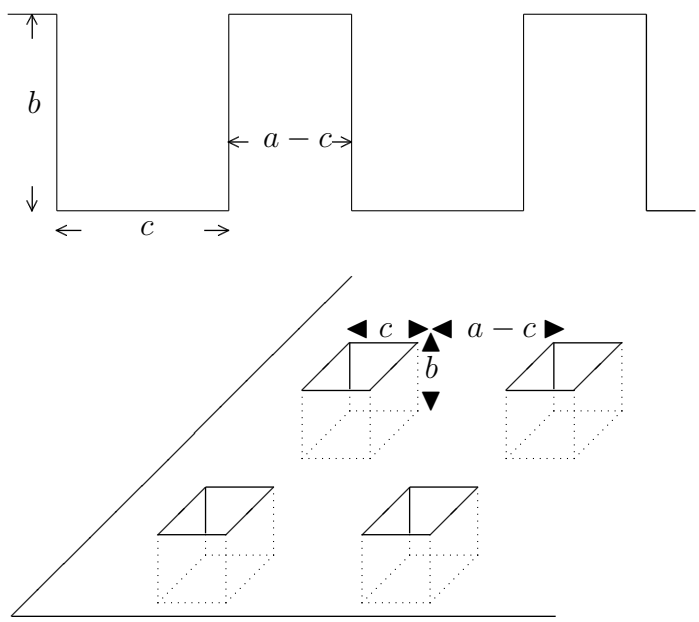

Fig. 4: The substrate surface W in dimensions 1 and 2.

4.1 Ground states

We define the specific energy per unit length as $h(\Gamma, W) = \lim_{N\to\infty} \frac{H(\Gamma,W)}{|\Lambda|}$. We use Γ_k to denote the horizontal interface at height k i.e. such that $h_i = k$ for all i. Notice that,

$$\Delta h(W) \equiv h(W,W) - rJ_{BW} = r(J_{AW} - J_{BW})\,, \tag{4.2}$$

$$\Delta h(\Gamma_0) \equiv h(\Gamma_0, W) - rJ_{BW} = c' J_{AB} + (1-c')(J_{AW} - J_{BW})\,, \tag{4.3}$$

$$\Delta h(\Gamma_k) \equiv h(\Gamma_k, W) - rJ_{BW} = J_{AB}\,, \quad 1 \le k < +\infty\,. \tag{4.4}$$

where,

$$c' = \begin{cases} (c/a)^d & \text{if} \quad b > 0 \\ 1 - (c/a)^d & \text{if} \quad b < 0 \end{cases} \tag{4.5}$$

We let

$$\rho = \begin{cases} 1 + \dfrac{2db}{c} & \text{if} \quad b > 0 \\ \\ 1 + \dfrac{2d|b|c^{d-1}}{a^d - c^d} & \text{if} \quad b < 0 \end{cases} \tag{4.6}$$

From these formula, we get the following diagram of ground states (see Fig. 5). If $J_{AW} - J_{BW} < \rho^{-1} J_{AB}$ the ground state is the wall W. If $\rho^{-1} J_{AB} < J_{AW} - J_{BW}) < J_{AB}$ the ground state is Γ_0. For $J_{AW} - J_{BW} > J_{AB}$ the Γ_k are the ground states for any finite $k \geq 1$.

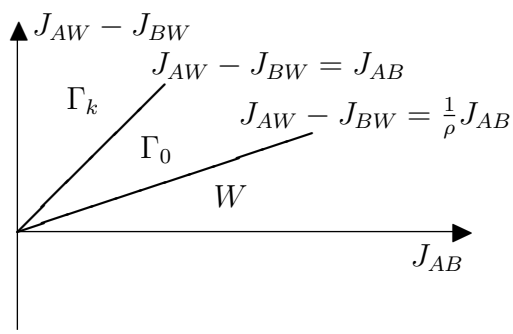

Fig. 5: The diagram of ground states.

4.2 Wenzel's regime

We will now consider the low temperature expansion of $\Delta\tau$ when the ground state is W. The analysis of Section 3 applies directly to that case. The energy of excitations which are defined as in the previous section are given by

$$E_w(\delta) = J_{AB}|\delta \setminus (\delta \cap W)| - (J_{AW} - J_{BW})|\delta \cap W| \tag{4.7}$$

By letting

$$C_w = \frac{J_{AB} - \rho(J_{AW} - J_{BW})}{1 + \rho}$$

we have

$$E_w(\delta) \geq C_w|\delta| \tag{4.8}$$

and as a corollary of Theorem 1 we get the

Corollary 2 *Assume that* $J_{AB}-\rho(J_{AW}-J_{BW})>0$*, then for* $\beta C_w>\log\nu_d+0.74$*, the following series, defining the differential wall surface tension, is absolutely convergent*

$$\Delta\tau = r(J_{AW}-J_{BW}) - \frac{1}{\beta a^d}\sum_{b\in W_{\mathbf{a}}}\sum_{C\ni b}\frac{\Phi^T(C)}{|C\cap\overline{W}|} \tag{4.9}$$

In this case Wenzel's law applies in a first approximation.

4.3 Cassie's regime

We will now consider the low temperature expansion of $\Delta\tau$ when the ground state is Γ_0.

For that we introduce the energy difference

$$H'_\Lambda(\Gamma\mid\Gamma_0) = H_\Lambda(\Gamma,W) - H_\Lambda(\Gamma_0,W) \tag{4.10}$$

We have

$$H'_\Lambda(\Gamma\mid\Gamma_0) = J_{AB}|\Gamma\setminus\Gamma_0| - [J_{AB}-(J_{AW}-J_{BW})](|\Gamma\cap W|-|\Gamma_0\cap W|) \tag{4.11}$$

and the differential wall tension reads

$$\Delta\tau = c'J_{AB} + (1-c')(J_{AW}-J_{BW}) + \lim_{N\to\infty} -\frac{1}{\beta|\Lambda|}\log Z^0_\Lambda \tag{4.12}$$

where

$$Z^0_\Lambda = \sum_\Gamma e^{-\beta H'_\Lambda(\Gamma|\Gamma_0)} \tag{4.13}$$

We now define the excitations as follows. Given Γ and Γ_0, we consider the symmetric difference

$$\Delta = (\Gamma\cup\Gamma_0)\setminus(\Gamma\cap\Gamma_0) \tag{4.14}$$

As in the previous section, we decompose Δ in maximal connected components $\Delta=\delta_1\cup\delta_2\cup\cdots\cup\delta_n$. The energy difference H'_Λ reads in terms of families of excitations as $H'_\Lambda(\Gamma\mid\Gamma_0)=E_0(\delta_1)+\cdots+E_0(\delta_n)$ where

$$E_0(\delta) = J\ell_v(\delta) + [J_{AB}-(J_{AW}-J_{BW})](|\delta\cap W_u|-|\delta\cap W_d|) \tag{4.15}$$

Here $\ell_v(\delta)$ denotes the length of the vertical cells (bonds in dimension 1, or plaquettes in dimension 2) of δ, $W_u=W\cap\Gamma_0$, and $W_d=W\setminus W_u$. Then,

$$Z^0_\Lambda = \sum_{\Delta=\{\delta_1,\ldots,\delta_n\}}\prod_{i=1}^n e^{-\beta E_0(\delta_i)} \tag{4.16}$$

and $\log Z_\Lambda = \sum_C \Phi_0^T(C)$ where the truncated functionals Φ_0^T are defined by (3.11) as before, but with E replaced by E_0.

We let

$$C_0 = \min\left\{\frac{J_{AW}-J_{BW}}{1+c/d}, \frac{J_{AB}-(J_{AW}-J_{BW})}{2(c^d+1)}, \frac{\rho(J_{AW}-J_{BW})-J_{AB}}{2\rho}\right\}$$

if $b > 0$ and

$$C_0 = \min\left\{\frac{J_{AB}-(J_{AW}-J_{BW})}{4(a^2-c^2)}, \frac{(J_{AW}-J_{BW})-J_{AB}/\rho}{2c+a^2-c^2}\right\}$$

if $b < 0$ and $d = 2$.

Theorem 3 *Assume that* $(1/\rho)J_{AB} < J_{AW} - J_{BW} < J_{AB}$. *Then, for* $\beta C_0 > \log \nu_d + 0.74$, *the following series, defining the differential wall tension, is absolutely convergent*

$$\Delta\tau = c' J_{AB} + (1-c')(J_{AW}-J_{BW}) - \frac{1}{\beta a^d}\sum_{b\in W_{\mathbf{a}}}\sum_{C\ni b}\frac{\Phi_0^T(C)}{|C\cap \overline{W}|} \tag{4.17}$$

The proof is given in the appendix.

The corollary 2 and theorem 3 give the following transition between the Wenzel's and Cassie's regime:

i) If $J_{AW} - J_{BW} < J_{AB}/\rho$, then

$$\Delta\tau = r(\Delta\tau)^* + O(e^{-\beta C_w}) \tag{4.18}$$

which corresponds the Wenzel's law

ii) If $J_{AB}/\rho < J_{AW} - J_{BW} < J_{AB}$, then

$$\Delta\tau = c'\tau_{AB} + (1-c')(\Delta\tau)^* + O(e^{-\beta C_0}) \tag{4.19}$$

which corresponds the Cassie's law

Here $(\Delta\tau)^*$ refers to the flat wall.

4.4 the intermediate regime

Let us mention that when

$$J_{AW} - J_{BW} = \frac{1}{\rho} J_{AB}$$

a degeneracy of ground states appears, their number tending to infinity in the thermodynamic limit. Indeed, with $b > 0$, any configuration following, at each pore, either the wall ∂W or the horizontal plane Γ_0, is a ground state with specific energy given by (4.2) or (4.3) (both expressions coincide in this case). This leads to the existence of a specific residual entropy at zero temperature

$$S \equiv \lim_{\beta\to\infty} \lim_{N\to\infty} \frac{1}{|\Lambda|} \log Z_\Lambda = \frac{1}{a^d} \log 2$$

This might suggest that $\Delta\tau$ behaves like $\Delta h - S/\beta$ around the point $J_{AW} - J_{BW} = \frac{1}{\rho} J_{AB}$. We are planning to examine in a next work the possibility of such kind of corrections at low temperature.

Remark 4 *The discussion of the previous subsections extends to more general geometries of the wall. One can consider for example a wall composed of different rectangular wells with sizes given by* (b_k, c_k)*. The phase diagram of ground states will then exhibit different transition lines given by the corresponding* ρ*'s. Whence increasing the parameter* $J_{AW} - J_{BW}$*, the ground states will move from the wall* W *to successive grounds states that fill different wells up to* Γ_0*.*

Acknowledgements

J.R. wishes to thank the Centre de Recherche en Modélisation Moléculaire–Université de Mons–Hainaut for the enthusiasming atmosphere and the financial support during his stay. S. M. S. wishes to thank the Institut des Hautes Études Scientifiques, Bures-sur-Yvette (France), for the kind hospitality extended to him during the completion of this work.

Appendix

Proof of Theorem 1

The first ingredient is the following lower bound on the energy:

$$E(\delta) \geq C|\delta| \tag{A.1}$$

This bound follows from definitions (3.7) (3.13) by taking into account some easy geometrical observations.

The bound (A.1) ensures the convergence of the series $\sum_{\delta \ni x} e^{-\beta E(\delta)}$ as soon as $\beta C > \log \nu_d$, since the number of polygons (or of excitations δ) of size ℓ passing to a given point is less then ν_d^ℓ .

Moreover using this bound, the proof of formula (3.15) as well as that of the absolute convergence of the series can be established following [GMM] (Chapter 4) in which the low temperature contours of the Ising model were considered in the role played here by the excitations. Indeed, the convergence of the cluster expansion holds, c.f. [D] [M], as soon as one can find a positive real-valued function $\mu(\delta)$ such that

$$e^{-\beta E(\delta)} \mu(\delta)^{-1} \exp \left\{ \sum_{\delta' \iota \, \delta} \mu(\delta') \right\} < 1 \tag{A.2}$$

where the sum runs over excitations δ' incompatible with δ: this relation is denoted by $\delta' \iota \, \delta$ and means that δ' do not intersect δ. Taking into account the above remark on the entropy of excitations, that the lengths of excitations are even with minimal value $|\delta_{\min}| = 4$, that $\sum_{\delta' \iota \delta} \mu(\delta') \leq |\delta| \sum_{\delta' \ni b} \mu(\delta')$, and choosing $\mu(\delta) = (\nu_d e^t)^{-|\delta|}$, inequality (A.2) will be satisfied whenever

$$\beta C > \log \nu_d + t + \frac{e^{-4t}}{1 - e^{-2t}}$$

The value $t_0 \simeq .61$ that minimizes the function $t + [e^{-4t}/(1 - e^{-2t})]$ provides the value 0.74 given in the theorem. The expression (4.9) then follows from (3.2) and (3.10) by letting $N \to \infty$, taking into account that $\log Z_\Lambda$ equals

$$\sum_{b \in W} \sum_{C \ni b} \frac{\Phi^T(C)}{|C \cap \overline{W}|}$$

up to a term that will disappear in the thermodynamic limit. ■

Proof of Theorem 3

The first step is to prove the following lower bound on the energy:

$$E_0(\delta) \geq C_0 |\delta| \tag{A.3}$$

Let us start with the

1–**dimensional case**

We partition δ in two disjoint subsets δ^+ and δ^- as follows. A vertical bond belongs to δ^+ (respectively δ^-) if it is above Γ_0 (respectively below Γ_0). Next, consider the vertical line $x = i + 1/2$, $i \in \mathbb{Z}$. These lines intersect δ in two points, one at height 0 and the other at positive or negative height. In the first case we let the two intersected bonds belong to δ^+ and in the second case we let them belong to δ^-. Then δ^+ as well as δ^- splits into maximal connected components: $\delta^+ = \delta_1^+ \cup \delta_2^+ \cup \cdots \cup \delta_n^+$, $\delta^- = \delta_1^- \cup \delta_2^- \cup \cdots \cup \delta_m^-$, and the energy reads

$$E_0(\delta) = \sum_{k=0}^{n} E_0(\delta_k^+) + \sum_{k=0}^{m} E_0(\delta_k^-) \tag{A.4}$$

By eq. (4.15), the energy of the components δ^+ and δ^- reads

$$\begin{aligned} E_0(\delta_k^+) &= J\ell_v(\delta_k^+) + (J-K)|\delta_k^+ \cap W_u| \\ E_0(\delta_k^-) &= J\ell_v(\delta_k^-) - (J-K)|\delta_k^- \cap W_d| \end{aligned} \tag{A.5}$$

where hereafter $J = J_{AB}$, $K = J_{AW} - J_{BW}$. We will drop below the subscript k to $\delta_k^\pm$ but still thinking of it as a component of $\delta^\pm$.

Using $\ell_h(\delta^-)$ to denote the number of horizontal bonds of δ^-, it is easy to realize that

$$E_0(\delta^-) \geq \begin{cases} K\ell_v(\delta^-) & \text{if} \quad \delta^- \cap \Gamma_{-b} = \emptyset \\ K\ell_v(\delta^-) - (J-K)\dfrac{\ell_h(\delta^-)}{2} & \text{if} \quad \delta^- \cap \Gamma_{-b} \neq \emptyset \end{cases} \tag{A.6}$$

by taking into account that $J \geq K$ and that the number of horizontal bonds of $\delta^- \cap W_d$ does not exceed $\ell_h(\delta^-)/2$.

When $\delta^- \cap \Gamma_{-b} = \emptyset$, the two obvious bounds $\ell_h(\delta^-) \leq 2c$ and $\ell_v(\delta^-) \geq 2$, leads immediately to the inequality $(c+1)\ell_v(\delta^-) \geq \ell_h(\delta^-) + \ell_v(\delta^-) = |\delta^-|$ so that

$$E_0(\delta^-) \geq \frac{K}{c+1}|\delta^-| \tag{A.7}$$

Coming to the case $\delta^- \cap \Gamma_{-b} \neq \emptyset$, we note that the excitations satisfy

$\ell_v(\delta^-) \geq 2b$. Then

$$\begin{aligned} E_0(\delta^-) &\geq K\left[\ell_v(\delta^-) + \frac{\ell_h(\delta^-)}{2}\right] - J\frac{\ell_h(\delta^-)}{2} \\ &\geq \left[\ell_v(\delta^-) + \frac{\ell_h(\delta^-)}{2}\right]\left(K - J\max\frac{\frac{\ell_h(\delta^-)}{2}}{\ell_v(\delta^-) + \frac{\ell_h(\delta^-)}{2}}\right) \\ &\geq \left[\ell_v(\delta^-) + \frac{\ell_h(\delta^-)}{2}\right]\left(K - J\max\frac{\frac{\ell_h(\delta^-)}{2}}{2b + \frac{\ell_h(\delta^-)}{2}}\right) \end{aligned}$$

The maximum is obtained whenever $\ell_h(\delta^-)$ reaches its maximum value, i.e. for $\ell_h(\delta^-) = 2c$. Thus, we get in that case

$$E_0(\delta^-) \geq (K - J/\rho)\frac{|\delta^-|}{2} \tag{A.8}$$

Let us now turn to $E_0(\delta^+)$. When $\delta^+ \cap W_u = \emptyset$, with the help of inequalities $\ell_h(\delta^+) \leq 2c$ and $\ell_v(\delta^+) \geq 2$, we argue as above for the proof of (A.7), to get

$$E_0(\delta^+) \geq \frac{J}{c+1}|\delta^+| \tag{A.9}$$

Coming to the case $\delta^+ \cap W_u \neq \emptyset$, it suffices to realize that $|\delta^+ \cap W_u| \geq \frac{1}{2(c+1)}\ell_h(\delta^+)$ to get

$$E_0(\delta^+) \geq J\ell_v(\delta^+) + \frac{J-K}{2(c+1)}\ell_h(\delta^+) \geq \frac{J-K}{2(c+1)}|\delta^+| \tag{A.10}$$

Then, the bound (A.3) follows, in dimension 1 for $b > 0$, from inequalities (A.7–A.10). The situation $b < 0$ is obviously identical inverting the role of c and $a - c$, and thus we will not deal with it. We now turn to the proof in the

2–dimensional case

As in the 1–dimensional case, we partition δ in two disjoint subsets δ^+ and δ^-. A vertical plaquette belongs to δ^+ (respectively δ^-) if it is above Γ_0 (respectively below Γ_0). Next we consider the vertical line $x = i + (1/2, 1/2)$, $i \in \mathbb{Z}^2$. These lines intersect δ in two points, one at height 0 and the other at positive or negative height. We let the two intersected plaquettes belong to δ^+ in the first case and to δ^- in the second case. Then again, the energy is given by (A.4-A.5). We split the rest of the proof of (A.3) in two part dealing first with

The case $b > 0$ Using $\ell_h^*(\delta^-) = \ell_h(\delta^- \cap \Gamma_{-b})$ to denote the number of horizontal plaquettes of $\delta^- \cap \Gamma_{-b}$, we notice that $E_0(\delta^-)$ satisfies the lower bounds

$$E_0(\delta^-) \geq \begin{cases} K\ell_v(\delta^-) & \text{if} \quad \delta^- \cap \Gamma_{-b} = \emptyset \\ K\ell_v(\delta^-) - (J-K)[\ell_v(\delta^-) + \ell_h^*(\delta^-)] & \text{if} \quad \delta^- \cap \Gamma_{-b} \neq \emptyset \end{cases} \tag{A.11}$$

When $\delta^- \cap \Gamma_{-b} = \emptyset$, the isoperimetric inequality yields $\ell_v(\delta^-) \geq 4\sqrt{\ell_h(\delta^-)/2}$. Since $\ell_h(\delta^-) \leq 2c^2$ we get $\ell_v(\delta^-) \geq (2/c)\ell_h(\delta^-)$ so that

$$E_0(\delta^-) \geq \frac{K}{1+\frac{c}{2}}|\delta^-| \tag{A.12}$$

Coming to the case $\delta^- \cap \Gamma_{-b} \neq \emptyset$, note that, by isoperimetric inequality, the excitations satisfy $\ell_v(\delta^-) \geq 4b\sqrt{\ell_h^*(\delta^-)}$. Then we have

$$\begin{aligned} E_0(\delta^-) &\geq K\big[\ell_v(\delta^-) + \ell_h^*(\delta^-)\big] - J\ell_h^*(\delta^-) \\ &\geq \big[\ell_v(\delta^-) + \ell_h^*(\delta^-)\big]\left(K - J\max\frac{\ell_h^*(\delta^-)}{\ell_v(\delta^-) + \ell_h^*(\delta^-)}\right) \\ &\geq \big[\ell_v(\delta^-) + \ell_h^*(\delta^-)\big]\left(K - J\max\frac{\ell_h^*(\delta^-)}{4b\sqrt{\ell_h^*(\delta^-)} + \ell_h^*(\delta^-)}\right) \\ &\geq \big[\ell_v(\delta^-) + \ell_h^*(\delta^-)\big]\left(K - J\max\frac{\sqrt{\ell_h^*(\delta^-)}}{4b + \sqrt{\ell_h^*(\delta^-)}}\right) \end{aligned}$$

The maximum is reached for the maximum value of $\ell_h^*(\delta^-)$, i.e. for $\ell_h^*(\delta^-) = c^2$. Thus, we get in that case

$$E_0(\delta^-) \geq (K - J/\rho)\frac{|\delta^-|}{2} \tag{A.13}$$

Let us now turn to $E_0(\delta^+)$. When $\delta^+ \cap W_u = \emptyset$, the isoperimetric inequality yields $\ell_v(\delta^-) \geq 4\sqrt{\ell_h(\delta^-)/2}$. As above for the proof of (A.12) the obvious inequality $\ell_h(\delta^-) \leq 2c^2$ leads to $\ell_v(\delta^-) \geq (2/c)\ell_h(\delta^-)$ so that

$$E_0(\delta^+) \geq \frac{J}{1+c/2}|\delta^+| \tag{A.14}$$

Coming to the case $\delta^+ \cap W_u \neq \emptyset$, we notice that $|\delta^+ \cap W_u| \geq \frac{1}{2(c^2+1)}\ell_h(\delta^+)$ so that

$$E_0(\delta^+) \geq J\ell_v(\delta^+) + \frac{J-K}{2(c^2+1)}\ell_h(\delta^+) \geq \frac{J-K}{2(c^2+1)}|\delta^+| \tag{A.15}$$

Then, the bound (A.3) follows, in dimension 2 for $b > 0$, from inequalities (A.12–A.15). We finally turn to

The case $b < 0$ As before $E_0(\delta^-)$ satisfy the lower bounds

$$E_0(\delta^-) \geq \begin{cases} K\ell_v(\delta^-) & \text{if} \quad \delta^- \cap \Gamma_{-b} = \emptyset \\ K\ell_v(\delta^-) - (J-K)[\ell_v(\delta^-) + \ell_h^*(\delta^-)] & \text{if} \quad \delta^- \cap \Gamma_{-b} \neq \emptyset \end{cases} \tag{A.16}$$

We first notice that the excitations satisfy

$$\ell_v(\delta^-) \geq \frac{4c}{2(a^2-c^2)}\ell_h(\delta^-) \tag{A.17}$$

so that when $\delta^- \cap \Gamma_{-b} = \emptyset$, one has

$$E_0(\delta^-) \geq \frac{2cK}{2c+a^2-c^2}|\delta^-| \tag{A.18}$$

Coming to the case $\delta^- \cap \Gamma_{-b} \neq \emptyset$, we notice that the excitations satisfy furthermore

$$\ell_v(\delta^-) \geq \frac{4|b|c}{(a^2-c^2)}\ell_h^*(\delta^-) \tag{A.19}$$

where $\ell_h^*(\delta^-) = \ell_h(\delta^- \cap \Gamma_{-b})$. Then we have

$$\begin{aligned} E_0(\delta^-) &\geq J\ell_v(\delta^-) - (J-K)(\ell_v(\delta^-) + \ell_h^*(\delta^-)) \\ &\geq \left[\ell_v(\delta^-) + \ell_h^*(\delta^-)\right]\left(K - J\frac{\ell_h^*(\delta^-)}{\ell_v(\delta^-) + \ell_h^*(\delta^-)}\right) \\ &\geq \left[\ell_v(\delta^-) + \ell_h^*(\delta^-)\right]\left(K - J\max\frac{\ell_h^*(\delta^-)/\ell_v(\delta^-)}{1 + \ell_h^*(\delta^-)/\ell_v(\delta^-)}\right) \end{aligned}$$

The maximum is reached for $\ell_h^*(\delta^-)/\ell_v(\delta^-) = \frac{4|b|c}{(a^2-c^2)}$, and thus

$$E_0(\delta^-) \geq (K - J/\rho)[\ell_v(\delta^-) + \ell_h^*(\delta^-)]$$

which combined with inequality (A.17) implies

$$E_0(\delta^-) \geq \frac{2c(K-J/\rho)}{2c+a^2-c^2}|\delta^-| \tag{A.20}$$

Let us turn to $E_0(\delta^+)$. When $\delta^+ \cap W_u = \emptyset$ the excitations satisfy (A.17) so that by arguing as in the proof of (A.18), we get

$$E_0(\delta^+) \geq \frac{2cJ}{2c+a^2-c^2}|\delta^+| \tag{A.21}$$

Coming finally to the case $\delta^+ \cap W_u \neq \emptyset$ we first recall that

$$E_0(\delta^+) = J\ell_v(\delta^+) + (J-K)|\delta^+ \cap W_u| \tag{A.22}$$

We will prove a lower bound on the RHS of (A.22) with the help of an auxiliary excitation $\bar{\delta}$. We first deal with simple excitations. Namely, we assume that the horizontal plaquettes of δ^+ lies on the planes at height 0 and 1, that the vertical projection of $\delta^+ \cap \Gamma_1$ on the plane Γ_0 gives $\delta^+ \cap \Gamma_0$, and finally that the vertical part of δ^+ is the set of vertical plaquettes that intersect both the boundaries $\partial(\delta^+ \cap \Gamma_0)$ and $\partial(\delta^+ \cap \Gamma_1)$. Here, the boundary $\partial(\delta^+ \cap \Gamma_0)$ consists of the set of bonds of Γ_0 that belong both to a plaquette of $\delta^+ \cap \Gamma_0$ and to a plaquette of its complement $\Gamma_0 \setminus (\delta^+ \cap \Gamma_0)$. Analogously, the boundary $\partial(\delta^+ \cap \Gamma_1)$ is the set of bonds of Γ_1 that belong both to a plaquette of $\delta^+ \cap \Gamma_1$ and to a plaquette of $\Gamma_1 \setminus (\delta^+ \cap \Gamma_1)$. We now construct the auxiliary excitation $\bar{\delta}$ as follows. The horizontal part of $\bar{\delta}$ consists to the set obtained by adding to the horizontal part of δ^+ all the horizontal plaquettes $p \in \Gamma_0$ at distance less than $a^2 - c^2$ of any point $x \in \delta^+ \cap \Gamma_0$, and all the horizontal plaquettes $p \in \Gamma_1$ at distance less than $a^2 - c^2$ of any point $x \in \delta^+ \cap \Gamma_1$, i.e.

$$\bar{\delta} \cap \Gamma_0 = \big\{(\delta^+ \cap \Gamma_0) \cup (p \in \Gamma_0) : \mathrm{dist}(p,x) \leq a^2 - c^2, x \in \delta^+ \cap \Gamma_0\big\}$$
$$\bar{\delta} \cap \Gamma_1 = \big\{(\delta^+ \cap \Gamma_1) \cup (p \in \Gamma_1) : \mathrm{dist}(p,x) \leq a^2 - c^2, x \in \delta^+ \cap \Gamma_1\big\}$$

The vertical part of $\bar{\delta}$ is the set of vertical plaquettes that intersect both $\partial(\bar{\delta} \cap \Gamma_0)$ and $\partial(\bar{\delta} \cap \Gamma_1)$. Then we have

$$\ell_h(\bar{\delta} \cap W_u) \geq \frac{1}{a^2 - c^2}\ell_h(\bar{\delta})$$

On the other hand it is clear that

$$\ell_v\big((\bar{\delta} \setminus \delta^+) \cap W_u\big) \leq 2\ell_v(\delta^+)$$

Since $\ell_v(\bar{\delta} \cap W_u) = \ell_v(\delta^+ \cap W_u) + \ell_v((\bar{\delta} \setminus \delta^+) \cap W_u)$, and obviously $\ell_h(\bar{\delta}) \geq \ell_h(\delta^+)$, the two previous inequalities imply

$$2\ell_v(\delta^+) + \ell_v(\delta^+ \cap W_u) \geq \frac{1}{a^2 - c^2}\ell_h(\delta^+)$$

It is also clear that this inequality holds true for any δ^+ since the geometry considered above is the less favorable one. From this inequality, we deduce by (A.22):

$$E_0(\delta^+) \geq \frac{J-K}{4(a^2 - c^2)}|\delta^+| \tag{A.23}$$

Then, the bound (A.3) follows, in dimension 2 when $b < 0$, from inequalities (A.20)and (A.23).

From this bound, we get the absolute convergence of the cluster expansion and formula 4.17 as in the proof of Theorem 1. ■

References

[AK] D.B. Abraham and L.F. Ko, *Exact derivation of the modified Young equation for partial wetting*, Phys. Rev. Lett. **63**, 275–279 (1989).

[BDK] C. Borgs, J. De Coninck, and R. Kotecký, *An equilibrium lattice model of wetting on rough substrates*, J. Stat. Phys. **94**, 299–320 (1999).

[BDKZ] C. Borgs, J. De Coninck, R. Kotecký, and M. Zinque, *Does the roughness of the substrate enhance wetting*, Phys. Rev. Lett. **74**, 2292–2294 (1995).

[BIV] T. Bodineau, D. Ioffe, and Y. Velenik, *Rigorous probabilistic analysis of equilibrium crystal shapes*, Preprint (2000); *Winterbottom construction for finite range ferromagnetic models: an* $\mathbb{L}_1$ *approach*, Preprint (2001).

[C] A. B. D. Cassie, Discuss. Faraday Soc. **57**, 5041 (1952).

[D] R. L. Dobrushin, *Estimates of semi–invariants for the Ising model at low temperatures*, Amer. Math. Soc. Transl. **177**, 59–81 (1996).

[DD] J. De Coninck and F. Dunlop, *Partial to complete wetting: A microscopic derivation of the Young relation*, J. Stat. Phys. **47**, 827–849 (1987).

[DDR] J. De Coninck, F. Dunlop, and V. Rivasseau, *On the microscopic validity of the Wulff construction and of the generalized Young equation*, Commun. Math. Phys. **121**, 401–419 (1989).

[DMR] J. De Coninck, S. Miracle–Solé, and J. Ruiz, *Is there an optimal substrate geometry for wetting*, J. Stat. Phys. **100**, 981–997 (2000).

[DT] F. Dunlop and K. Topolski, *Cassie's law and concavity of wall tension with respect to disorder*, J. Stat. Phys. **98**, 1115–1134 (2000).

[DGI] J.D. Deuschel, G. Giacomin, and D. Ioffe, *Large deviations and concentration properties for* $\nabla\phi$ interface models, Prob. Theory Related. Fields **117**, 49–111 (2000).

[GMM] G. Gallavotti, A. Martin Löf, and S. Miracle-Solé, *Some problems connected with the coexistence of phases in the Ising model*, in "Statistical mechanics and mathematical problems", Lecture Notes in Physics vol 20, pp. 162–204, Springer, Berlin (1973).

[M] S. Miracle-Solé, *On the convergence of cluster expansion*, Physica **A 279**, 244-249 (2000).

[MMR] A. Messager, S. Miracle-Solé and J. Ruiz, *Convexity properties of the surface tension and equilibrium crystals*, J. Stat. Phys. **67**, 449–470 (1992).

[MR] S. Miracle-Solé and J. Ruiz, *On the Wulff construction as a problem of equivalence of statistical ensembles*, in "On Three levels", M. Fannes *et al.* eds., Plenum Press, New York (1994).

[PV] C.-E. Pfister and Y. Velenik, *Mathematical theory of the wetting phenomenon in the 2D Ising model*, Helv. Phys. Acta **69**, 949–973 (1996).

[SL] P. S. Swain and R. Lipowsky, *Contact angles on heterogeneous surfaces: a new look at Cassie's and Wenzel's laws*, Langmuir **14**, 6772–6780 (1998).

[TUBD] K. Topolski, D. Urban, S. Brandon, and J. De Coninck, *Influence of the geometry of a rough substrate on wetting*, Phys. Rev. E **56**, 3353–3357 (1997).

[W] R. N. Wenzel, Ind. Eng. Chem. **28**, 988 (1936); J. Phys. **53**, 1466 (1949).