HAL open science

Continuum Mechanics - Solids

Paolo Vannucci

To cite this version:

Paolo Vannucci. Continuum Mechanics - Solids. Master. Université de Versailles Saint Quentin en Yvelines, France. 2017. cel-01529010v4

HAL Id: cel-01529010

https://hal.science/cel-01529010v4

Submitted on 7 Nov 2018 (v4), last revised 17 Jan 2023 (v10)

HAL is a multi-disciplinary open access archive for the deposit and dissemination of scientific research documents, whether they are published or not. The documents may come from teaching and research institutions in France or abroad, or from public or private research centers.

L'archive ouverte pluridisciplinaire **HAL**, est destinée au dépôt et à la diffusion de documents scientifiques de niveau recherche, publiés ou non, émanant des établissements d'enseignement et de recherche français ou étrangers, des laboratoires publics ou privés.

Distributed under a Creative Commons Attribution - NonCommercial - NoDerivatives 4.0 International License

Class notes of the course

Continuum Mechanics

– Solids –

Paolo Vannucci

paolo.vannucci@uvsq.fr

Année Universitaire 2015-16

Preface

This text is the support for the course of Continuum Mechanics - Solids, of the Master of Mechanics of the University Paris-Saclay - Curriculum MMM: Mathematical Methods for Mechanics, held at Versailles.

The course is an introduction, for graduate students, to the classical mechanics of continuum solids, with an emphasis on beam theories (Saint-Venant problem and rod theories).

The first part is a short, essential introduction to the continuum mechanics of bodies in the framework of the small strain assumption: the strain and stress analysis are briefly introduced, especially with regards to their use in the following of the course. Then, the fundamental elements of classical elasticity are briefly recalled, namely for the case of isotropic hyper elastic bodies.

The second part of the course concerns beams: a classical presentation of the Saint-Venant theory for beams is given, with also the approximate theories of Bredt and Jourawski for torsion and shear. The last part of the text is devoted to the classical rod theories of Euler-Bernoulli and Timoshenko.

The manuscript is accompanied by 90 exercises; some of them are rather emblematic and complete the theoretical part.

It is self evident that this course is far from being exhaustive: it just constitutes a hopefully effective introduction in the matter, that is completed in other courses of the same MMM.

Versailles, August 24, 2015

Contents

Preface **iii**

1 Strain analysis **1**
1.1 Introduction . . . 1
1.2 Deformation gradient . . . 1
1.3 Geometric changes . . . 3
1.3.1 Change in length . . . 3
1.3.2 Change in angle . . . 4
1.3.3 Change in volume . . . 4
1.3.4 Deformations . . . 5
1.4 Pure deformations and rigid body motions . . . 5
1.5 Small strain deformations . . . 6
1.6 Geometrical meaning of the ε_{ij} . . . 8
1.7 Principal strains . . . 9
1.8 Spherical and deviatoric parts of $\boldsymbol{\varepsilon}$ . . . 9
1.9 Compatibility equations . . . 10
1.10 Exercises . . . 11

2 Stress analysis **15**
2.1 Forces . . . 15
2.2 The Cauchy's theorem . . . 16
2.3 Stress components . . . 19
2.4 Balance equations . . . 20
2.5 Boundary conditions . . . 23
2.6 Principal stresses . . . 24
2.7 Work balance . . . 24
2.8 Exercises . . . 25

3 Classical elasticity **29**
3.1 Constitutive equations . . . 29
3.2 Classical elasticity . . . 30
3.3 Reduction of the number of elastic moduli . . . 32
3.4 Equations of Lamé . . . 34
3.5 Elastic energy of an isotropic body . . . 37
3.6 Bounds on the elastic constants . . . 38
3.7 The equations of Navier . . . 39
3.8 The equations of Beltrami-Michell . . . 40

3.9 Superposition of the effects . . . 42
3.10 The Principle of Virtual Displacements . . . 42
3.11 Elasticity theorems . . . 44
3.11.1 The Theorem of Clapeyron . . . 44
3.11.2 The Theorem of Betti . . . 44
3.11.3 The Theorem of Kirchhoff . . . 45
3.11.4 The Theorem of Castigliano . . . 45
3.11.5 The Theorem of Minimum Total Potential Energy . . . 46
3.11.6 The Theorem of Minimum Complementary Energy . . . 47
3.12 Exercises . . . 49

4 The Saint-Venant Problem 53
4.1 Problem definition . . . 53
4.2 The Principle of Saint-Venant . . . 54
4.3 The four fundamental cases . . . 55
4.4 The semi-inverse method . . . 56
4.5 The fundamental assumption . . . 56
4.6 Global balances . . . 57
4.7 Extension . . . 59
4.8 Bending . . . 60
4.8.1 Conjecture on the stress field . . . 60
4.8.2 The strain field . . . 62
4.8.3 Displacements . . . 62
4.8.4 The Euler-Bernoulli law . . . 64
4.8.5 Deformation of the cross section . . . 65
4.8.6 Biaxial bending . . . 67
4.8.7 Bending and extension . . . 68
4.9 Torsion . . . 69
4.9.1 The circular section . . . 69
4.9.2 Sections of any shape . . . 72
4.9.3 The Bredt's approximate solution . . . 75
4.10 Shear . . . 77
4.11 Yielding . . . 80
4.12 Exercises . . . 82

5 Rod theories 87
5.1 Introduction . . . 87
5.2 Plane rods . . . 87
5.2.1 Balance equations . . . 88
5.2.2 Compatibility equations . . . 89
5.2.3 Constitutive equations . . . 90
5.2.4 The Timoshenko's rod . . . 91
5.2.5 The Euler-Bernoulli rod . . . 92
5.2.6 Isostatic and hyperstatic rods . . . 92
5.2.7 The torsion equations . . . 94
5.3 The Mohr's theorems . . . 96
5.4 The Principle of Virtual Displacements for rods . . . 96
5.5 Hyperstatic systems of rods . . . 98

5.5.1 The Müller-Breslau equations 98
5.5.2 The dummy load method 101
5.5.3 Effects of the temperature 101
5.6 Exercises 103

Suggested texts **107**

Chapter 1

Strain analysis

1.1 Introduction

We are concerned here with *deformable bodies*, i.e. with continuum[1] bodies that can be strained: the relative positions of the *material* points are altered by some agents (forces, temperature etc.).

We will call *deformation* a change of position of the material points when this change is accompanied also by a mutual change of the relative positions. The description of the deformation (*strain analysis*) is based upon the introduction of some geometric quantities and algebraic operators, able to account for some properties of the deformation. All these points need to be specified mathematically.

1.2 Deformation gradient

We consider a solid continuum body which occupy the region Ω of the Euclidean space $\mathcal{E}$ (in short, we identify the body with Ω). Some agents strain Ω and deform it to the final configuration Ω_t. We use capital letters for denoting any quantity in Ω and small letters for Ω_t. The general situation is that sketched in Fig. 1.1.

Any point $P \in \Omega$ is transformed by the deformation into a *unique* point $p \in \Omega_t$:

$$p = f(P); \tag{1.1}$$

p is hence a function of point in Ω. Function f is said to be a *deformation* whenever it is a continuous and bijective function on Ω[2]. Bijectivity is essential to state a fundamental property of classical continuum mechanics: mass conservation.

[1] The notion of continuum body is primary here and it is left to the basic idea of a body whose fundamental property is that of occupying some space, i.e. a region $\Omega \subset \mathcal{E}$, the ordinary Euclidean space. We will denote by $\mathcal{V}$ the vector space associated with $\mathcal{E}$, called the *space of translations* $\mathbf{u}$, and by $Lin(\mathcal{V})$ the *linear space of second rank tensors over* $\mathcal{V}$, i.e. of all the linear transformations $\mathbf{L} : \mathcal{V} \to \mathcal{V}$.

[2] f is continuous in $P \in \Omega$ if, $\forall$ sequence $\{P_n \in \Omega, n \in \mathbb{N}\}$ that converges to P, the sequence $\{p_n = f(P_n), n \in \mathbb{N}\}$ converges to $f(P)$; f is continuous on Ω if it is continuous $\forall P \in \Omega$.

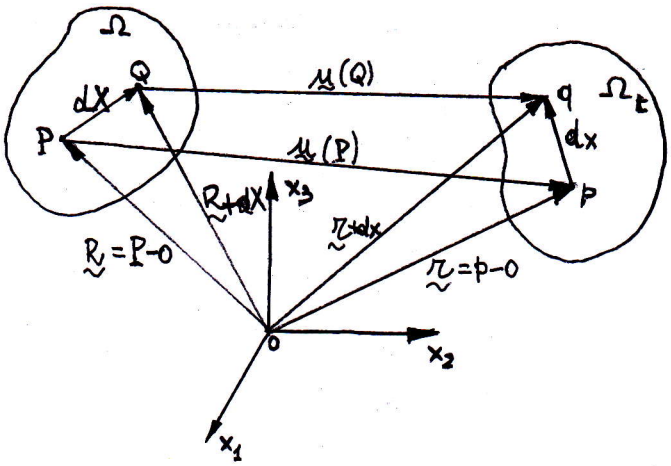

Figure 1.1: General sketch for the strain analysis

Ω is said to be the *reference configuration* and Ω_t the *actual configuration.* The vector

$$\mathbf{u}(P) = p - P = f(P) - P \tag{1.2}$$

is the *displacement vector*, a vector field on Ω; $\mathbf{R} = P - o$ and $\mathbf{r} = p - o$ are the position vectors respectively of P and p with respect to a fixed Cartesian frame.

The purpose of strain analysis is not only to study the displacement field $\mathbf{u}$, but, mainly, to analyse how matter deforms everywhere in Ω. For this, we try to study what happens in a material set close to any point $P \in \Omega$ and in particular how elementary geometric quantities defined on this set evolve during deformation.

To this purpose, let us introduce the concept of *fiber*: a fiber dX in the vicinity of $P \in \Omega$ is a vector composed by material points such that

$$dX = \alpha \mathbf{e}, \quad |\mathbf{e}| = 1, \ \alpha \to 0, \ \alpha \in \mathbb{R}^+. \tag{1.3}$$

A fiber

$$dX = Q - P \tag{1.4}$$

is hence a *small material vector* from $P \in \Omega$ to $Q \in \Omega$, with Q close to P. We are concerned with the following question: in which fiber dx is transformed by f the fiber dX? It is

$$dx = q - p = Q + \mathbf{u}(Q) - (P + \mathbf{u}(P)) = Q - P + \mathbf{u}(Q) - \mathbf{u}(P) = dX + \mathbf{u}(Q) - \mathbf{u}(P), \tag{1.5}$$

but

$$\mathbf{u}(Q) = \mathbf{u}(P) + \nabla \mathbf{u}(P)(Q - P) + o(Q - P)^2, \tag{1.6}$$

because Q is close to P. So, neglecting higher order terms, we get

$$\mathbf{u}(Q) = \mathbf{u}(P) + \nabla \mathbf{u}(P) dX \tag{1.7}$$

and finally

$$dx = [\mathbf{I} + \nabla \mathbf{u}(P)] dX. \tag{1.8}$$

$\nabla\mathbf{u}(P)$ is the *displacement gradient*; as a linear operator, $\nabla\mathbf{u}$ is a second-rank tensor[3]:

$$\nabla\mathbf{u} = u_{i,j}\ \mathbf{e}_i \otimes \mathbf{e}_j. \tag{1.9}$$

We pose

$$\mathbf{F} = \mathbf{I} + \nabla\mathbf{u}, \tag{1.10}$$

the *deformation gradient*. We thus obtain the formula

$$dx = \mathbf{F}dX \ \rightarrow\ F_{ij} = \delta_{ij} + u_{i,j} = \frac{dx_i}{dX_j}, \tag{1.11}$$

with δ_{ij} the Kronecker's symbol.

Generally speaking $\mathbf{F} \neq \mathbf{F}^\top$, so, though completely describing the deformation, $\mathbf{F}$ has not a *good algebraic structure*.

1.3 Geometric changes

We are interested in knowing how basic geometric quantities in the neighborhood of any point $P \in \Omega$ change during the deformation. This will allow to introduce other tensors that, though not able to completely describe the deformation, nonetheless have a better algebraic structure than $\mathbf{F}$.

1.3.1 Change in length

First, we investigate the changes of length of any fiber dX in P during the deformation: knowing $|dX|$, how long is $|dx|$? Putting

$$dX = |dX|\ \mathbf{e}, \quad |\mathbf{e}| = 1, \tag{1.12}$$

we have

$$|dx| = \sqrt{\mathbf{F}\ dX \cdot \mathbf{F}\ dX} = |dX|\sqrt{\mathbf{e} \cdot \mathbf{F}^\top\mathbf{F}\ \mathbf{e}}. \tag{1.13}$$

The *change in length* $\delta\ell(\mathbf{e})$ of a fiber in P parallel to $\mathbf{e}$ is defined as

$$\delta\ell(\mathbf{e}) := \frac{|dx| - |dX|}{|dX|} = \sqrt{\mathbf{e} \cdot \mathbf{F}^\top\mathbf{F}\ \mathbf{e}} - 1; \tag{1.14}$$

the *stretch* $\lambda(\mathbf{e})$ of the same fiber is

$$\lambda(\mathbf{e}) := \frac{|dx|}{|dX|} = 1 + \delta\ell(\mathbf{e}) = \sqrt{\mathbf{e} \cdot \mathbf{F}^\top\mathbf{F}\ \mathbf{e}}. \tag{1.15}$$

[3]The *dyad* $\mathbf{a} \otimes \mathbf{b}$ of two vectors $\mathbf{a}$ and $\mathbf{b}$ is the tensor such that $\forall\mathbf{v} \in \mathcal{V}, (\mathbf{a} \otimes \mathbf{b})\mathbf{v} = \mathbf{b} \cdot \mathbf{v}\ \mathbf{a}$. Given a orthonormal basis $e = \{\mathbf{e}_1, \mathbf{e}_2, \mathbf{e}_3\}$, any second-rank tensor $\mathbf{L}$ can be decomposed as a sum of nine dyads: $\mathbf{L} = L_{ij}\mathbf{e}_i \otimes \mathbf{e}_j$, where the Cartesian components are given by $L_{ij} = \mathbf{e}_i \cdot \mathbf{L}\mathbf{e}_j$.

1.3.2 Change in angle

Be Θ the angle formed by two fibers $dX_i = |dX_i|\mathbf{e}_i,\ |\mathbf{e}_i| = 1,\ i = 1, 2$, in P; we are interested in knowing the angular change from Θ to θ, the angle formed by the deformed fibers dx_1 and dx_2.

We define the *change in angle* $\delta\theta(\mathbf{e}_1, \mathbf{e}_2)$ between the directions $\mathbf{e}_1$ and $\mathbf{e}_2$ the difference

$$\delta\theta(\mathbf{e}_1, \mathbf{e}_2) := \Theta - \theta; \tag{1.16}$$

remembering that

$$\cos\Theta = \frac{dX_1 \cdot dX_2}{|dX_1||dX_2|} = \mathbf{e}_1 \cdot \mathbf{e}_2,\ \cos\theta = \frac{dx_1 \cdot dx_2}{|dx_1||dx_2|} = \frac{\mathbf{F}\ dX_1 \cdot \mathbf{F}\ dX_2}{\lambda_1|dX_1|\lambda_2|dX_2|}, \tag{1.17}$$

we finally get

$$\delta\theta(\mathbf{e}_1, \mathbf{e}_2) = \arccos(\mathbf{e}_1 \cdot \mathbf{e}_2) - \arccos(\frac{\mathbf{e}_1 \cdot \mathbf{F}^\top\mathbf{F}\ \mathbf{e}_2}{\lambda_1\lambda_2}). \tag{1.18}$$

1.3.3 Change in volume

To study the volume changes around a point $P \in \Omega$, we consider the volume of the prism determined by three non coplanar fibers $dX_i = |dX_i|\mathbf{e}_i,\ |\mathbf{e}_i| = 1,\ i = 1, 2, 3$, in P. The volume of the prism in Ω is

$$dV = dX_1 \cdot dX_2 \times dX_3, \tag{1.19}$$

while in Ω_t it is[4]

$$dv = dx_1 \cdot dx_2 \times dx_3 = \mathbf{F}dX_1 \cdot \mathbf{F}dX_2 \times \mathbf{F}dX_3 = \det\mathbf{F}\ dX_1 \cdot dX_2 \times dX_3, \tag{1.20}$$

i.e.

$$dv = \det\mathbf{F}\ dV. \tag{1.21}$$

We define *change in volume* in P the quantity

$$\delta v := \frac{dv - dV}{dV} = \det\mathbf{F} - 1. \tag{1.22}$$

To remark that because

$$\det\mathbf{F} = \frac{dv}{dV} \tag{1.23}$$

is a ratio of intrinsically positive quantities, it is necessarily

$$\det\mathbf{F} > 0. \tag{1.24}$$

We also remark that a deformation is locally *isochoric* $\iff$ $\det\mathbf{F} = 1$.

[4] It can be proved that $\forall\mathbf{u}, \mathbf{v}, \mathbf{w} \in \mathcal{V}$ and $\forall\mathbf{L} \in Lin(\mathcal{V}),\ \mathbf{Lu} \cdot \mathbf{Lv} \times \mathbf{Lw} = \det\mathbf{L}\ (\mathbf{u} \cdot \mathbf{v} \times \mathbf{w})$. Because $\mathbf{u} \cdot \mathbf{v} \times \mathbf{w}$ is the volume of the prism determined by $\mathbf{u}, \mathbf{v}$ and $\mathbf{w}$, if $\det\mathbf{L} = 0$ then $\mathbf{L}$ annihilates the volume of the deformed prism, i.e. the original prism is changed into a flat figure.

1.3.4 Deformations

We can now precise mathematically the definition of *deformation*: *a function* $f(P) : \Omega \to \mathcal{E}$ *is a deformation if it is a continuous and bijective function of* P *on* Ω *and if* $\det \mathbf{F} > 0$ *everywhere in* Ω.

The inequality is strict: $\det \mathbf{F} = 0$ is not admissible because this should mean to transform a finite volume into a flat figure, with vanishing volume. Such a fact should not preserve bijectivity and conservation of the matter.

1.4 Pure deformations and rigid body motions

A deformation can be seen as a superposition of a *pure deformation* and of a *rigid body motion*, and these two parts can be split easily.

To this end, we use a classical decomposition of any second-rank tensor, splitting $\nabla \mathbf{u}$ in its *symmetric* and *skew* parts:

$$\nabla \mathbf{u} = \boldsymbol{\varepsilon} + \boldsymbol{\omega}, \tag{1.25}$$

with

$$\boldsymbol{\varepsilon} = \frac{\nabla \mathbf{u} + \nabla^\top \mathbf{u}}{2}, \quad \boldsymbol{\omega} = \frac{\nabla \mathbf{u} - \nabla^\top \mathbf{u}}{2}, \tag{1.26}$$

being evidently

$$\boldsymbol{\varepsilon} = \boldsymbol{\varepsilon}^\top, \quad \boldsymbol{\omega} = -\boldsymbol{\omega}^\top. \tag{1.27}$$

Then,

$$\mathbf{F} = \mathbf{I} + \boldsymbol{\varepsilon} + \boldsymbol{\omega} \tag{1.28}$$

and

$$dx = (\mathbf{I} + \boldsymbol{\varepsilon} + \boldsymbol{\omega})\ dX = dX + \boldsymbol{\varepsilon}\ dX + \boldsymbol{\omega}\ dX. \tag{1.29}$$

So, any deformed fiber dx is equal to the originally undeformed one, dX, plus two modifying vectors; let us analyse them, starting with $\boldsymbol{\omega}$:

$$\boldsymbol{\omega} = -\boldsymbol{\omega}^\top \Rightarrow \exists\ \mathbf{v}_\omega \in \mathcal{V} :\ \boldsymbol{\omega}\ dX = \mathbf{v}_\omega \times dX, \tag{1.30}$$

$\mathbf{v}_\omega$ being the axial vector of $\boldsymbol{\omega}$. By the same definition of curl of a vector,

$$2\boldsymbol{\omega}\ dX = (\nabla \mathbf{u} - \nabla^\top \mathbf{u})\ dX = (\text{curl } \mathbf{u}) \times dX, \tag{1.31}$$

which gives also the relation

$$\mathbf{v}_\omega = \frac{1}{2}\text{curl } \mathbf{u}. \tag{1.32}$$

Let us now consider a particularly important case, that of *small displacements*; generally speaking, a rigid rotation is characterized by an amplitude, say φ, and by an axis of rotation, say $\mathbf{w}$, $|\mathbf{w}| = 1$. A general result, is that any rigid rotation can be represented by a tensor $\mathbf{R}$ which in terms of φ and $\mathbf{w}$ is given by

$$\mathbf{R} = \mathbf{I} + \sin\varphi \mathbf{W} + (1 - \cos\varphi)\mathbf{W}^2, \tag{1.33}$$

with $\mathbf{W} = -\mathbf{W}^\top$ the axial tensor of $\mathbf{w}$[5].

For small displacements, $\varphi \to 0$ so that

$$\mathbf{R} \simeq \mathbf{I} + \varphi \mathbf{W}; \tag{1.34}$$

so, comparing this result with eq. (1.29), we see that the term $\boldsymbol{\omega}\ dX$ represents a rigid motion in the assumption of small displacements. Hence, the term $\boldsymbol{\varepsilon}$ represents a pure deformation. For small displacement transformations, pure deformations are hence described by a symmetric tensor.

1.5 Small strain deformations

We now develop $\lambda, \delta\ell, \delta\theta$ and δv for the case of *small strain*: a deformation is said to be a *small strain deformation* if and only if

$$|u_{i,j}| \ll 1\ \forall i, j = 1, 2, 3. \tag{1.35}$$

We remark hence that the small displacement hypothesis concerns the smallness of vector $\mathbf{u}$, while the assumption of small strain that of $\nabla\mathbf{u}$. Nevertheless, whenever the above condition is satisfied, then all the components of $\boldsymbol{\omega}$ are small too, so also in this assumption $\varphi \to 0$, i.e. the small strain assumption is sufficient for interpreting the part $\boldsymbol{\omega}$ as a rigid motion.

Let us start developing $\lambda(\mathbf{e})$:

$$\begin{aligned} \lambda(\mathbf{e}) &= \sqrt{\mathbf{e} \cdot \mathbf{F}^\top \mathbf{F}\mathbf{e}} = \sqrt{\mathbf{e} \cdot (\mathbf{I} + \boldsymbol{\varepsilon} + \boldsymbol{\omega})^\top (\mathbf{I} + \boldsymbol{\varepsilon} + \boldsymbol{\omega})\mathbf{e}} \\ &= \sqrt{\mathbf{e} \cdot (\mathbf{I} + 2\boldsymbol{\varepsilon} + \boldsymbol{\varepsilon}^2 - \boldsymbol{\omega}\boldsymbol{\varepsilon} + \boldsymbol{\varepsilon}\boldsymbol{\omega} - \boldsymbol{\omega}^2)\mathbf{e}}. \end{aligned} \tag{1.36}$$

Terms like $\mathbf{e} \cdot \boldsymbol{\varepsilon}\boldsymbol{\omega}\mathbf{e}$ are of second order with respect to $2\mathbf{e} \cdot \boldsymbol{\varepsilon}\mathbf{e}$ to within the assumption of small strain:

$$2\mathbf{e} \cdot \boldsymbol{\varepsilon}\mathbf{e} = 2\varepsilon_{ij} e_i e_j = (u_{i,j} + u_{j,i}) e_i e_j, \tag{1.37}$$

while

$$\mathbf{e} \cdot \boldsymbol{\varepsilon}\boldsymbol{\omega}\mathbf{e} = \varepsilon_{ik}\omega_{kj} e_i e_j = \frac{1}{4}(u_{i,k} + u_{k,i})(u_{k,j} - u_{j,k}) e_i e_j. \tag{1.38}$$

As a consequence, for small strain deformations the terms $\boldsymbol{\varepsilon}\boldsymbol{\omega}, \boldsymbol{\omega}\boldsymbol{\varepsilon}, \boldsymbol{\varepsilon}^2$ and $\boldsymbol{\omega}^2$ can be discarded in front of $\boldsymbol{\varepsilon}$.

[5] To any $\mathbf{w} = (w_1, w_2, w_3) \in \mathcal{V}$ can be associated its *axial tensor* $\mathbf{W} = -\mathbf{W}^\top$ defined as

$$\mathbf{W} = \begin{bmatrix} 0 & -w_3 & w_2 \\ w_3 & 0 & -w_1 \\ -w_2 & w_1 & 0 \end{bmatrix},$$

such that $\mathbf{w} \times \mathbf{v} = \mathbf{W}\mathbf{v}\ \forall \mathbf{v} \in \mathcal{V}$. It is easily checked that the only eigenvector of $\mathbf{W}$ is $\mathbf{w}$, relative to the unique real eigenvalue, 0. For this reason, $\mathbf{W}$ is called the *axial tensor* of $\mathbf{w}$ and reciprocally, $\mathbf{w}$ is said to be the *axial vector* or *axis* of $\mathbf{W}$.

So, still thanks to the smallness of $\nabla\mathbf{u}$, we get:

$$\begin{aligned}\lambda(\mathbf{e}) &\simeq \sqrt{\mathbf{e}\cdot(\mathbf{I}+2\boldsymbol{\varepsilon})\mathbf{e}} = \sqrt{1+2\mathbf{e}\cdot\boldsymbol{\varepsilon}\mathbf{e}} \\ &\simeq \sqrt{1+2\mathbf{e}\cdot\boldsymbol{\varepsilon}\mathbf{e}+(\mathbf{e}\cdot\boldsymbol{\varepsilon}\mathbf{e})^2} = \sqrt{(1+\mathbf{e}\cdot\boldsymbol{\varepsilon}\mathbf{e})^2},\end{aligned} \tag{1.39}$$

and finally

$$\lambda(\mathbf{e}) = 1+\mathbf{e}\cdot\boldsymbol{\varepsilon}\mathbf{e}. \tag{1.40}$$

It follows immediately that

$$\delta\ell(\mathbf{e}) = \lambda(\mathbf{e})-1 = \mathbf{e}\cdot\boldsymbol{\varepsilon}\mathbf{e}. \tag{1.41}$$

Let us now consider the change in angle in the assumption of small strain:

$$\mathbf{e}_1\cdot\mathbf{F}^\top\mathbf{F}\mathbf{e}_2 = \mathbf{e}_1\cdot(\mathbf{I}+2\boldsymbol{\varepsilon}+\boldsymbol{\varepsilon}^2-\boldsymbol{\omega}\boldsymbol{\varepsilon}+\boldsymbol{\varepsilon}\boldsymbol{\omega}+\boldsymbol{\omega}^2)\mathbf{e}_2 \simeq \mathbf{e}_1\cdot(\mathbf{I}+2\boldsymbol{\varepsilon})\mathbf{e}_2, \tag{1.42}$$

so

$$\begin{aligned}\delta\theta(\mathbf{e}_1,\mathbf{e}_2) &= \arccos(\mathbf{e}_1\cdot\mathbf{e}_2) - \arccos\frac{\mathbf{e}_1\cdot(\mathbf{I}+2\boldsymbol{\varepsilon})\mathbf{e}_2}{\lambda_1\lambda_2} \\ &= \Theta - \arccos\frac{\mathbf{e}_1\cdot\mathbf{e}_2+2\mathbf{e}_1\cdot\boldsymbol{\varepsilon}\mathbf{e}_2}{\lambda_1\lambda_2}.\end{aligned} \tag{1.43}$$

Finally, the change in volume:

$$\delta v = \det\mathbf{F}-1 = \det(\mathbf{I}+\boldsymbol{\varepsilon}+\boldsymbol{\omega})-1; \tag{1.44}$$

we use now the following general result of tensor algebra[6]:

$$\forall\mathbf{L}\in Lin(\mathcal{V}),\quad \det(\mathbf{I}+\mathbf{L}) = 1+\mathrm{tr}\mathbf{L}+\frac{\mathrm{tr}^2\mathbf{L}-\mathrm{tr}\mathbf{L}^2}{2}+\det\mathbf{L}. \tag{1.45}$$

Applying this result to the sum $\mathbf{I}+\boldsymbol{\varepsilon}+\boldsymbol{\omega}$, gives:

$$\delta v = \mathrm{tr}(\boldsymbol{\varepsilon}+\boldsymbol{\omega})+\frac{\mathrm{tr}^2(\boldsymbol{\varepsilon}+\boldsymbol{\omega})-\mathrm{tr}(\boldsymbol{\varepsilon}+\boldsymbol{\omega})^2}{2}+\det(\boldsymbol{\varepsilon}+\boldsymbol{\omega}), \tag{1.46}$$

and in the small strain assumption, one easily recognizes that the second and third term on the right hand side are negligible compared to the first one; hence

$$\delta v \simeq \mathrm{tr}(\boldsymbol{\varepsilon}+\boldsymbol{\omega}) = \mathrm{tr}\boldsymbol{\varepsilon}+\mathrm{tr}\boldsymbol{\omega}, \tag{1.47}$$

and because $\boldsymbol{\omega} = -\boldsymbol{\omega}^\top, \mathrm{tr}\boldsymbol{\omega} = 0$, so finally

$$\delta v = \mathrm{tr}\boldsymbol{\varepsilon}. \tag{1.48}$$

We remark hence that the change in volume is a linear function of the ε_{ij} and that

$$\delta v = \mathrm{tr}\boldsymbol{\varepsilon} = \mathrm{tr}\frac{\nabla\mathbf{u}+\nabla^\top\mathbf{u}}{2} = \mathrm{tr}\nabla\mathbf{u} = \mathrm{div}\mathbf{u}, \tag{1.49}$$

[6]The proof of this result is rather long and tedious, but not difficult: it is sufficient to develop by components the terms on the left and right side of eq. (1.45) and remark, at the end, that they give the same global quantity

so a deformation is isochoric if and only if the displacement field is solenoidal.

In the end, we can notice that in the assumption of small strain, the rigid body part of the deformation, $\boldsymbol{\omega}$, does not take any part. $\boldsymbol{\varepsilon}$ is called the *infinitesimal strain tensor* or *tensor of small strains*; unlike $\mathbf{F}$, $\boldsymbol{\varepsilon} = \boldsymbol{\varepsilon}^\top$ and, though it does not completely describe the deformation, it is sufficient to give us the relevant information about it in the assumption of small strain.

In the following of this text, we will assume always *small perturbations*, i.e. both the hypotheses of small displacements and small strain. Besides the possibility of completely describing the strain by tensor $\boldsymbol{\varepsilon}$, so discarding the part due to $\boldsymbol{\omega}$, this assumption let us consider as coincident the two configurations Ω and Ω_t, the reference and the actual one, because separated by a small displacement, in the sense that $|\mathbf{u}(P)| \ll d_\Omega \ \forall P \in \Omega$, where d_Ω is a characteristic dimension of Ω. Hence, $p = f(P) \simeq P \ \forall P \in \Omega$, so p can be approximated by P; this is the reason why in the following we will no more make the distinction between them and use always lower case letters for indicating points in Ω.

The possibility of approximating the actual configuration with the reference one has extremely important consequences in mechanics. In fact, in doing so, we tacitly postulate that the forces acting on Ω do not change their point of application and that the equilibrium equations are written in the reference configuration, which is known, and not in the actual, unknown one. This is false in principale, but in doing so, we eliminate one of the principal sources of nonlinearity: the dependence of the equilibrium equations from the unknown equilibrium configuration.

Of course, this can have some dramatical consequences, as it has. In particular, if on one side, along with the assumption of a linear behavior of the material, see Chapt. 3, this gives the nice property of *linearity* to the equilibrium problem of deformable bodies, on the other side it makes disappear some important phenomena of nonlinear equilibrium, like buckling and stability.

Nonetheless, several cases of practical interest are not affected by such phenomena and they satisfy with a high degree of approximation the small perturbations assumption; that is why we will use it in the following of this text for analyzing some important problems of the linear mechanics of deformable bodies.

1.6 Geometrical meaning of the ε_{ij}

We can now examine the geometrical meaning of the components ε_{ij} of $\boldsymbol{\varepsilon}$: let $\mathbf{e}_i$ and $\mathbf{e}_j$ be two vectors of a base for $\mathcal{V}$:

$$\mathbf{e}_i \cdot \mathbf{e}_j = \delta_{ij}, \ i, j = 1, 2, 3. \tag{1.50}$$

Then (no summation over i in the following equation):

$$\begin{aligned} \delta\ell(\mathbf{e}_i) &= \mathbf{e}_i \cdot \boldsymbol{\varepsilon}\mathbf{e}_i = \mathbf{e}_i \cdot \varepsilon_{hk}(\mathbf{e}_h \otimes \mathbf{e}_k)\mathbf{e}_i \\ &= \delta_{ik}\mathbf{e}_i \cdot \varepsilon_{hk}\mathbf{e}_h = \delta_{ih}\delta_{ik}\varepsilon_{hk} = \varepsilon_{ii}. \end{aligned} \tag{1.51}$$

So, the diagonal terms ε_{ii} represent the change in length of the fibers aligned with the axis $\mathbf{e}_i$; moreover (no summation over i and j in the following equation)

$$\delta\theta(\mathbf{e}_i, \mathbf{e}_j) = \frac{\pi}{2} - \arccos \frac{2\mathbf{e}_i \cdot \boldsymbol{\varepsilon}\mathbf{e}_j}{\lambda_i \lambda_j} = \arcsin \frac{2\varepsilon_{ij}}{(1+\varepsilon_{ii})(1+\varepsilon_{jj})}, \tag{1.52}$$

and because $|\varepsilon_{ij}| \ll 1 \ \forall i, j$, then

$$\delta\theta(\mathbf{e}_i, \mathbf{e}_j) \simeq 2\varepsilon_{ij} : \tag{1.53}$$

the components of $\boldsymbol{\varepsilon}$ with distinct indices are half the shear deformation of the axes with corresponding indices.

1.7 Principal strains

An important consequence of the symmetry of $\boldsymbol{\varepsilon}$ is the existence of the *principal strains*, ensured by the spectral theorem[7]: there is a basis $v = \{\mathbf{v}_1, \mathbf{v}_2, \mathbf{v}_3\}$ composed of eigenvectors of $\mathbf{L}$, called *the principal directions of strain*, where

$$\boldsymbol{\varepsilon} = \varepsilon_i \mathbf{v}_i \otimes \mathbf{v}_i \ \rightarrow \ \boldsymbol{\varepsilon} = \begin{bmatrix} \varepsilon_1 & 0 & 0 \\ 0 & \varepsilon_2 & 0 \\ 0 & 0 & \varepsilon_3 \end{bmatrix}. \tag{1.54}$$

The terms on the diagonal are the *principal strains* and they coincide with the eigenvalues of $\boldsymbol{\varepsilon}$. Considering the results of the previous Section, it is then seen that in the basis of the principal directions the fibers aligned with the axes are simply stretched, not sheared: the principal directions of strain preserve their directions in the deformation and hence their mutual angles do not change.

We remark also that the change in volume is just the sum of the three eigenvectors of $\boldsymbol{\varepsilon}$:

$$\delta v = \varepsilon_1 + \varepsilon_2 + \varepsilon_3. \tag{1.55}$$

1.8 Spherical and deviatoric parts of $\boldsymbol{\varepsilon}$

An important decomposition of $\boldsymbol{\varepsilon}$, as of any other second-rank tensor, is into its *spherical*, $\boldsymbol{\varepsilon}_s$, and *deviatoric*, $\boldsymbol{\varepsilon}_d$, parts:

$$\boldsymbol{\varepsilon} = \boldsymbol{\varepsilon}_s + \boldsymbol{\varepsilon}_d, \tag{1.56}$$

with

$$\boldsymbol{\varepsilon}_s := \frac{1}{3}\mathrm{tr}\boldsymbol{\varepsilon}\ \mathbf{I}, \quad \boldsymbol{\varepsilon}_d := \boldsymbol{\varepsilon} - \boldsymbol{\varepsilon}_s. \tag{1.57}$$

[7]Spectral theorem: if a tensor $\mathbf{L}$ is symmetric, then it exists a basis of $\mathcal{V}$ composed by eigenvectors of $\mathbf{L}$ (for a demonstration, see the classical book of Halmos: *Finite-Dimensional Vector Spaces*, Springer 1987, p. 155). A consequence of this theorem is that $\mathbf{L}$ is diagonal in such a basis: in fact, be $v = \{\mathbf{v}_1, \mathbf{v}_2, \mathbf{v}_3\}$ a basis of eigenvectors of $\mathbf{L}$, $\mathbf{v}_i \cdot \mathbf{v}_j = \delta_{ij} \ \forall i, j$, and λ_k the eigenvalue corresponding to the eigenvector $\mathbf{v}_k$; then, $L_{ij} = \mathbf{v}_i \cdot \mathbf{L}\mathbf{v}_j = \lambda_j \mathbf{v}_i \cdot \mathbf{v}_j = \delta_{ij}\lambda_j \Rightarrow \mathbf{L} = \lambda_i \mathbf{v}_i \otimes \mathbf{v}_i$.

By the same definition, we obtain immediately that

$$\mathrm{tr}\boldsymbol{\varepsilon}_s = \frac{1}{3}\mathrm{tr}\boldsymbol{\varepsilon}\ \mathrm{tr}\mathbf{I} = \mathrm{tr}\boldsymbol{\varepsilon}, \quad \mathrm{tr}\boldsymbol{\varepsilon}_d = 0, \tag{1.58}$$

i.e. all the change in volume are concentrated in the spherical part $\boldsymbol{\varepsilon}_s$, while $\boldsymbol{\varepsilon}_d$ describes an isochoric deformation giving hence only changes of shape that preserve the volume.

This decomposition is of some importance in different problems, namely for introducing one of the most used yielding criterion for isotropic elastic materials, see Sect. 4.11.

1.9 Compatibility equations

Once a displacement field $\mathbf{u}$ known, it is always possible, differentiating it, to get the strain field $\boldsymbol{\varepsilon}$: a displacement field always defines uniquely a strain field (the field $\mathbf{u}$ is here assumed to be at least of class C^1).

The converse is not true: given a field $\boldsymbol{\varepsilon}$, it is not always possible to find a displacement field $\mathbf{u}(p)$ to which it corresponds through

$$\boldsymbol{\varepsilon} = \frac{\nabla\mathbf{u} + \nabla^\top\mathbf{u}}{2}. \tag{1.59}$$

In fact, we have 3 unknown scalar fields $u_i(p)$ and 6 equations: the problem is overdetermined. The question is hence: given the $\varepsilon_{ij}(p)$, which are the conditions that they must fulfill for being possible to find a *compatible* displacement field $\mathbf{u}(p)$, i.e. satisfying to the above equation?

To this purpose, we apply the definition of strain components and operate some differentiations; for instance:

$$\varepsilon_{11} = u_{1,1}, \quad \varepsilon_{22} = u_{2,2}, \quad 2\varepsilon_{12} = u_{1,2} + u_{2,1}, \tag{1.60}$$

that differentiated twice as

$$\varepsilon_{11,22} = u_{1,122}, \quad \varepsilon_{22,11} = u_{2,211}, \quad 2\varepsilon_{12,12} = u_{1,212} + u_{2,112} \tag{1.61}$$

and summed up give the condition

$$\varepsilon_{11,22} + \varepsilon_{22,11} = 2\varepsilon_{12,12}. \tag{1.62}$$

In a similar way, we get also

$$\begin{aligned} \varepsilon_{11,33} + \varepsilon_{33,11} &= 2\varepsilon_{13,13}, \\ \varepsilon_{22,33} + \varepsilon_{33,22} &= 2\varepsilon_{23,23}. \end{aligned} \tag{1.63}$$

Again,

$$\varepsilon_{11} = u_{1,1}, \quad 2\varepsilon_{12} = u_{1,2} + u_{2,1}, \quad 2\varepsilon_{13} = u_{1,3} + u_{3,1}, \quad 2\varepsilon_{23} = u_{2,3} + u_{3,2}, \tag{1.64}$$

differentiated twice as

$$\begin{aligned} \varepsilon_{11,23} = u_{1,123}, \quad 2\varepsilon_{12,13} = u_{1,213} + u_{2,113}, \\ 2\varepsilon_{13,12} = u_{1,312} + u_{3,112}, \quad 2\varepsilon_{23,11} = u_{2,311} + u_{3,211}, \end{aligned} \tag{1.65}$$

and summed up give

$$\varepsilon_{12,13} + \varepsilon_{13,12} = \varepsilon_{23,11} + \varepsilon_{11,23}, \tag{1.66}$$

and similarly, permutating the indices,

$$\begin{aligned} \varepsilon_{12,23} + \varepsilon_{23,12} = \varepsilon_{13,22} + \varepsilon_{22,13}, \\ \varepsilon_{13,23} + \varepsilon_{23,13} = \varepsilon_{12,33} + \varepsilon_{33,12}. \end{aligned} \tag{1.67}$$

The 6 equations (1.62), (1.63), (1.66) and (1.67) are the *Saint Venant-Beltrami compatibility equations*; they must be satisfied by any strain field $\boldsymbol{\varepsilon}$ for it is a *real strain field*, in the sense of deriving by a displacement field through eq. (1.59).

The Saint Venant-Beltrami equations can be written in a compact form:

$$\varepsilon_{ij,kl} + \varepsilon_{kl,ij} - \varepsilon_{ik,jl} - \varepsilon_{jl,ik} = 0; \tag{1.68}$$

these are 81 equations, but only the 6 Saint Venant-Beltrami equations are not identities, as it can be checked with some work but without difficulty.

1.10 Exercises

1. Study the following *simple* (i.e. such that $\nabla\mathbf{u} = \nabla^\top\mathbf{u}$) deformations:

   a) *extension* of amount α in the direction $\mathbf{e}$, $|\mathbf{e}| = 1$:

   $$\mathbf{u}(p) = \alpha\ (\mathbf{e} \otimes \mathbf{e})(p - p_0);$$

   b) *shear* of amount β with respect to the orthogonal directions $\mathbf{e}_1, \mathbf{e}_2$, $|\mathbf{e}_1| = |\mathbf{e}_2| = 1$:

   $$\mathbf{u}(p) = \beta(\mathbf{e}_1 \otimes \mathbf{e}_2 + \mathbf{e}_2 \otimes \mathbf{e}_1)(p - p_0);$$

   c) *dilatation* of amount γ:

   $$\mathbf{u}(p) = \gamma(p - p_0),$$

   with $\alpha, \beta, \gamma \in \mathbb{R}$, $|\alpha|, |\beta|, |\gamma| \ll 1$. For each case:

   i. write $\boldsymbol{\varepsilon}$;

   ii. determine δv;

   iii. determine the change of volume of a cube with the sides parallel to the axes;

   iv. determine $\delta\ell$ and λ for the sides of such a cube;

   v. determine $\delta\theta$ for each couple of sides of the same cube;

   vi. calculate the principal strains;

vii. calculate the principal directions of strain.

2. Show that it is always possible to decompose $\boldsymbol{\varepsilon}$ into a dilatation and an isochoric combination of 3 extensions plus 3 shears (such a decomposition has important applications in the theory of strength of isotropic elastic materials).

3. For the displacement field

$$\mathbf{u}(p) = \alpha(X_2 + X_3)\mathbf{e}_1 + \alpha(X_1 + X_3)\mathbf{e}_2 + \beta(X_1 + X_2)\mathbf{e}_3, \ \alpha, \beta \in \mathbb{R},$$

   i. determine the conditions on α, β for this field describe an infinitesimal strain;

   ii. find $\boldsymbol{\varepsilon}$;

   iii. find the change in length and angle of the 3 vectors of the base;

   iv. decompose the deformation into a dilatation plus 3 extensions and 3 shears.

4. The deformation described in cylindrical coordinates by

$$r = R, \ \theta = \Theta + \alpha Z, \ z = Z, \ \alpha \in \mathbb{R},$$

   is called a *torsion*;

   i. justify why it is called so, studying the displacement field of a circular cylinder of axis Z;

   ii. calculate $\mathbf{F}$ and $\nabla\mathbf{u}$;

   iii. show that the transformation is isochoric;

   iv. determine the condition to be satisfied by α for the deformation to be infinitesimal;

   v. find $\boldsymbol{\varepsilon}$;

   vi. calculate the displacement field in the case of small strain;

   vii. calculate the change in length and angle of the vectors of the cylindrical base;

   viii. calculate the displacement field $\mathbf{u}$ in Cartesian coordinates and deduce from it $\nabla\mathbf{u}$ and $\boldsymbol{\varepsilon}$.

5. For the deformation described in spherical coordinates by

$$\begin{aligned} r &= R(1 - \alpha|\phi^2 - \pi\phi|), \\ \varphi &= \phi, \qquad\qquad \alpha \in \mathbb{R}, \\ \theta &= \Theta, \end{aligned}$$

   i. represent graphically a sphere after deformation, for both the cases of $\alpha < 0$ and $\alpha > 0$;

   ii. find the displacement field $\mathbf{u}$;

   iii. calculate $\nabla\mathbf{u}$ and $\mathbf{F}$;

iv. determine the conditions on α for the transformation be really a deformation;

v. determine the conditions on α for the transformation be an infinitesimal deformation;

vi. determine $\boldsymbol{\varepsilon}$;

vii. calculate the change in length and angle for the vectors of the spherical base;

viii. calculate the change in length and angle for a point on the polar axis and on the equatorial plane;

ix. calculate the global change of volume for a sphere of radius ρ for both the cases of finite and infinitesimal strain.

6. Show that, just for any other second-rank symmetric tensor, among the eigenvalues of $\boldsymbol{\varepsilon}$ there are the highest value, the lowest one and a value which is a stationary point, with respect to the direction, of the change in length of a fiber.

7. Show that

   i.
$$|\boldsymbol{\varepsilon}|^2 + |\boldsymbol{\omega}|^2 = |\nabla \mathbf{u}|^2;$$

   ii.
$$|\boldsymbol{\varepsilon}|^2 - |\boldsymbol{\omega}|^2 = \nabla \mathbf{u} \cdot \nabla^\top \mathbf{u}.$$

8. Be $\mathbf{u}$ of class at least C^2 and assume that $\mathbf{u} = \mathbf{o}$ on $\partial\Omega$. Then, show the *Korn's inequality*:
$$\int_\Omega |\nabla \mathbf{u}|^2 d\omega \leq 2 \int_\Omega |\boldsymbol{\varepsilon}|^2 d\omega.$$

9. A *plane strain* is a situation where
$$\mathbf{u} = u_i(x_1, x_2)\mathbf{e}_i, \ i = 1, 2;$$

   i. write $\boldsymbol{\varepsilon}$ for such a case;

   ii. show that the six equations of Saint Venant-Beltrami reduce to only one and write it.

10. Consider the change in length of a fiber $\mathbf{x} = \alpha \mathbf{e}, \ |\mathbf{e}| = 1$,
$$\delta\ell = \frac{1}{\alpha^2} \mathbf{x} \cdot \boldsymbol{\varepsilon}\mathbf{x},$$
and the quadratic form
$$\mathbf{x} \cdot \boldsymbol{\varepsilon}\mathbf{x} = \pm k^2, \ k \in \mathbb{R}.$$
This defines a quadric, the *strain quadric of Cauchy*. Then,
$$\delta\ell = \pm \frac{k^2}{\alpha^2},$$

so the change in length of any fiber is inversely proportional to its square norm, i.e. to the square of the distance of the origin of the fiber from the quadric itself. Find the strain quadric for the cases of extension, shear and dilatation studied in exercise 1, and for a plane strain as defined in the previous exercise.

Chapter 2

Stress analysis

2.1 Forces

We are now concerned with *forces* as possible, though not unique, *agents of deformation*. About forces, we admit they are intuitively understood (we do not care here of their real, ultimate physical nature, of no importance for our context; it is sufficient for us to know that forces produce displacements and hence deformations) and that they are *represented by vectors*. There are different types of forces and it is important to understand that the *interior parts of a body* Ω *exchange forces between them*.

The general situation that we examine is that of a body Ω of which we consider a *material part* $\beta \subset \Omega$, with frontier $\partial\beta$ and outward unit normal $\mathbf{n}$, see Fig. 2.1. A material part is a subset of Ω composed by a set of material points, i.e., during deformation, the points remain exactly the same and their quantity is preserved.

Generally speaking, some forces act upon β and they can be of two types:

i. *volume* or *body* forces: these forces are directly applied to the material points in β for the simple reason that they exist. They are *remote* forces, result of the presence of one or more force fields: gravitational, electrostatic, magnetic etc. As such, these forces normally depend upon the position and they admit a *density*:

   - a *volume* density $\mathbf{b}=\mathbf{b}(p)$, or
   - a *mass* density $\mathbf{r}=\mathbf{r}(p) \rightarrow \mathbf{b}=\rho\ \mathbf{r}$,

   with ρ the volume mass (density of the matter). These forces are extensive quantities, so the total remote force acting upon β is

$$\mathbf{F}_\beta = \int_\beta \mathbf{b}\ dv = \int_\beta \rho\ \mathbf{r}\ dv; \tag{2.1}$$

ii. *surface* forces: these are the forces that Ω exchange with the environment, by contact through its boundary $\partial\Omega$, like pressure or thrusts exerted by some devices or other bodies, or the forces that β exchange with the rest of Ω still by contact through its frontier $\partial\beta$, called also *interior* forces; these last are the direct consequence of the same idea of continuum.

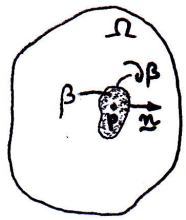

Figure 2.1: Material part.

The surface forces too admit a density, in this case of course a *surface density*, $\mathbf{t}$:

$$\mathbf{f}_\beta = \int_{\partial\beta} \mathbf{t}\ ds. \tag{2.2}$$

The density of surface forces $\mathbf{t}$ is called *traction* or *stress vector*. About $\mathbf{t}$, we admit the *Cauchy's postulate*: $\mathbf{t}$ is a function of the *actual* position and of the outward normal to $\partial\beta$:

$$\mathbf{t} = \mathbf{t}(p, \mathbf{n}). \tag{2.3}$$

The above statements deserve some remarks:

- there exist also attractive body forces that interior parts of a same body mutually exchange; such forces are neglected in the classical theory, but can be of course of an extreme importance in other fields, like astronomy and geophysics;
- the volume forces and the surface forces acting upon the boundary $\partial\Omega$ are *external* forces; they are considered to be *known*;
- the interior forces are *unknown* and to determine these last once the external forces known is the *major problem of continuum mechanics*;
- the Cauchy's postulate is a strong assumption: two different surfaces $\partial\beta_1$ and $\partial\beta_2$ sharing in p the same normal $\mathbf{n}$, share also the same traction $\mathbf{t}$; in particular, $\mathbf{t}$ does not depend upon the curvature of the surfaces in p;
- considering that through any point $p \in \partial\beta$ the matter exchanges only interior forces and not also interior couples is an implicit assumption that defines a class of materials, the so-called *classical continuum bodies à la Cauchy*; several classical materials can be well represented by this model, e.g. metallic alloys, wood, concrete etc, but not other ones, called *polar bodies*, like some polymers, for which the introduction of surface couples exchanged by interior parts of the body is necessary for a satisfactory description of its behavior; in this text, we will refer only to classical Cauchy bodies.

2.2 The Cauchy's theorem

The Cauchy's postulate does not specify in which way $\mathbf{t}$ is a function of $\mathbf{n}$. This is done by the

Theorem (Cauchy's theorem on stress)**.** *Traction* $\mathbf{t}$ *is a linear function of* $\mathbf{n}$*, i.e. it exists a second-rank tensor* $\boldsymbol{\sigma}$*, the Cauchy's stress tensor, such that*

$$\mathbf{t} = \boldsymbol{\sigma}\mathbf{n}. \tag{2.4}$$

Proof. Let us see the classical proof based on the use of the so-called *tetrahedron of Cauchy.* We consider at a point $p \in \Omega$ a tetrahedron like in Fig. 2.2, where p is the axes origin and the fourth face, whose normal is $\mathbf{n}$, is inclined with respect to the three faces passing by the axes. Be δ the distance of p from the inclined face. For δ sufficiently

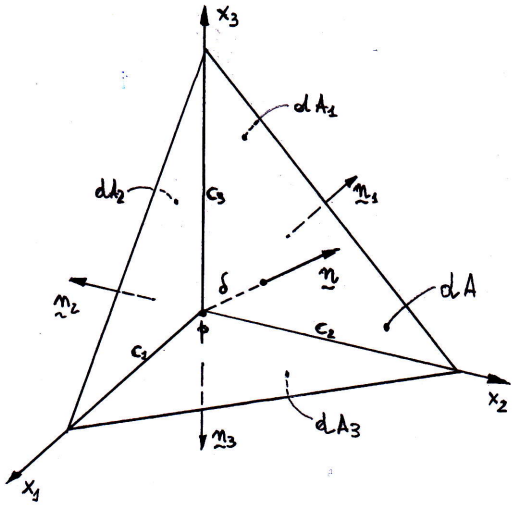

Figure 2.2: The tetrahedron of Cauchy.

small, all the tetrahedron is in Ω; be dA the area of the inclined face, with outward unit normal $\mathbf{n}$, while dA_i is the area of the face orthogonal to axis x_i, of outward unit normal $\mathbf{n}_i = -\mathbf{e}_i$. Be $\mathbf{t} = (t_1, t_2, t_3)$ the traction on the inclined surface and $\mathbf{b}$ the body force.

About the area of the surfaces of the tetrahedron, we know that[1]

$$dA_i = dA\ \mathbf{n} \cdot \mathbf{e}_i \quad \forall i = 1, 2, 3, \tag{2.5}$$

[1]The result in eq. (2.5) is known as *theorem of the cosine for the surfaces.* To prove it, we name c_i the length of the side of the tetrahedron along the axis x_i; then

$$dA_i = \frac{1}{2} c_j c_k, \ i, j, k = 1, 2, 3, \ i \neq j \neq k,$$

and

$$dA = \frac{1}{2} |(-c_1, c_2, 0) \times (-c_1, 0, c_3)| = \frac{1}{2}\sqrt{c_1^2 c_2^2 + c_2^2 c_3^2 + c_3^2 c_1^2}.$$

The normal $\mathbf{n}$ to dA is given by

$$\mathbf{n} = \frac{(-c_1, c_2, 0) \times (-c_1, 0, c_3)}{|(-c_1, c_2, 0) \times (-c_1, 0, c_3)|} = \frac{1}{\sqrt{c_1^2 c_2^2 + c_2^2 c_3^2 + c_3^2 c_1^2}} (c_2 c_3, c_1 c_3, c_1 c_2)$$

so we get

$$\mathbf{n} \cdot \mathbf{e}_i = \frac{dA_i}{dA},$$

i.e. eq. (2.5).

while the volume of the tetrahedron is

$$dV = \frac{1}{3}\delta \; dA. \tag{2.6}$$

We write now the balance of the forces acting upon the tetrahedron, using the *Euler's axiom*: when a body Ω is in equilibrium, then all of its material parts β are in equilibrium. Then, imaging the tetrahedron as a separated part of Ω, it will be in equilibrium under the action of the body forces and of the surface (contact) forces that it exchanges with the rest of Ω through its four surfaces. This gives the balance equation:

$$\mathbf{t} \; dA + \mathbf{t}_i dA_i + \mathbf{b} \; dV = \mathbf{o}, \tag{2.7}$$

and, for the above formulae for the areas and volume we get, after dividing by dA,

$$\mathbf{t} + \mathbf{t}_i \; \mathbf{n} \cdot \mathbf{e}_i + \frac{1}{3}\mathbf{b} \; \delta = \mathbf{o}. \tag{2.8}$$

Hence, when $\delta \to 0$, the point p tends to the surface dA whose normal is $\mathbf{n}$ and the body forces vanish; because $\mathbf{n}_i = -\mathbf{e}_i$, we obtain

$$\mathbf{t} = -\mathbf{t}_i \; \mathbf{n} \cdot \mathbf{e}_i = -(\mathbf{t}_i \otimes \mathbf{e}_i)\mathbf{n} = (\mathbf{t}_i \otimes \mathbf{n}_i)\mathbf{n}. \tag{2.9}$$

We put

$$\boldsymbol{\sigma} = \mathbf{t}_i \otimes \mathbf{n}_i, \tag{2.10}$$

the *Cauchy's stress tensor in p*, and finally

$$\mathbf{t} = \boldsymbol{\sigma} \; \mathbf{n}. \tag{2.11}$$

□

From eq. (2.9) we have also

$$\sigma_{ij} = \mathbf{e}_i \cdot (\mathbf{t}_k \otimes \mathbf{n}_k)\mathbf{e}_j = \mathbf{t}_k \cdot \mathbf{e}_i \; \mathbf{n}_k \cdot \mathbf{e}_j = (\mathbf{t}_k)_i(\mathbf{n}_k)_j. \tag{2.12}$$

Of course, if we take $\mathbf{n} = \mathbf{e}_i$, then $\mathbf{t} = \mathbf{t}_i$, as it must be. Just as for any other second rank tensor, given a base $e = \{\mathbf{e}_1, \mathbf{e}_2, \mathbf{e}_3\}$, we can write

$$\boldsymbol{\sigma} = \sigma_{ij} \; \mathbf{e}_i \otimes \mathbf{e}_j, \tag{2.13}$$

with

$$\sigma_{ij} = \mathbf{e}_i \cdot \boldsymbol{\sigma} \; \mathbf{e}_j. \tag{2.14}$$

It is important to remark that $\boldsymbol{\sigma}$ is a function of the place and time, not of $\mathbf{n}$:

$$\boldsymbol{\sigma} = \boldsymbol{\sigma}(p, t). \tag{2.15}$$

As already done, the dependence upon time, always existing, is left tacitly understood in the equations.

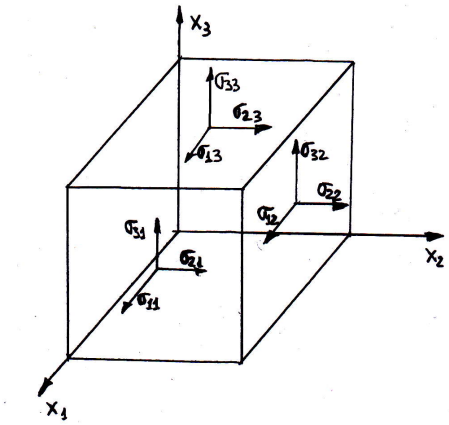

Figure 2.3: The components σ_{ij}.

2.3 Stress components

Let us apply the Cauchy's theorem to surface elements whose normal is parallel to one of the axes, $\mathbf{n} = \mathbf{e}_k$:

$$\mathbf{t}^{(k)} = \sigma_{ij}(\mathbf{e}_i \otimes \mathbf{e}_j)\mathbf{e}_k = \sigma_{ij}\ \delta_{jk}\ \mathbf{e}_i = \sigma_{ik}\ \mathbf{e}_i, \tag{2.16}$$

so

$$\mathbf{t}^{(k)} = \sigma_{ik}\ \mathbf{e}_i = (\sigma_{1k}, \sigma_{2k}, \sigma_{3k}); \tag{2.17}$$

this result shows that the k-th column of the matrix representing $\boldsymbol{\sigma}$ in the base $e = \{\mathbf{e}_1, \mathbf{e}_2, \mathbf{e}_3\}$ is composed by the Cartesian components of the traction acting upon the surface whose normal is $\mathbf{e}_k$. Graphically, the situation is depicted in Fig. 2.3. We remark the position of the indexes: the first one gives the direction of the component of the traction acting upon a surface whose normal is the axis indicated by the second index (e.g. σ_{13} is the component along x_1 of the traction acting upon a surface whose normal is $\mathbf{e}_3$).

To remark that the above nomenclature comes directly from the mere application of the equations; some authors chose to swap the indexes: in σ_{ij}, i is the direction of the normal to the surface upon which the traction acts, while j is the direction of the component σ_{ij} of the traction. This is not so important, because $\boldsymbol{\sigma} = \boldsymbol{\sigma}^\top$, as we will see below.

Looking at Fig. 2.3, it is clear why:

- the components with equal indexes σ_{ii} are called *normal stresses*: they give the component of the traction upon a surface that is normal, i.e. perpendicular, to the same surface; because in eq. (2.4) $\mathbf{n}$ is the *outward* unit normal, a normal stress σ_{ii} is positive if it is a tension, negative if a compression; normal stresses form the diagonal of the matrix representing $\boldsymbol{\sigma}$;
- the components with different indexes $\sigma_{ij}, i \neq j$ are called *shear stresses*: they give a component of the traction upon a surface orthogonal to an axis that is tangential to the same surface; they are the out-of-diagonal components of the matrix representing $\boldsymbol{\sigma}$.

More generally, for each element of surface of unit normal $\mathbf{n}$, the traction $\mathbf{t} = \boldsymbol{\sigma}\ \mathbf{n}$ can be decomposed into two mutually orthogonal vectors, see Fig. 2.4:

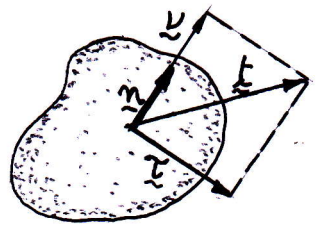

Figure 2.4: Normal, $\boldsymbol{\nu}$, and tangential, $\boldsymbol{\tau}$, stresses.

- the *normal stress* $\boldsymbol{\nu}$:

$$\boldsymbol{\nu} = (\mathbf{t} \cdot \mathbf{n})\mathbf{n} = (\mathbf{n} \otimes \mathbf{n})\mathbf{t} = (\mathbf{n} \otimes \mathbf{n})\boldsymbol{\sigma}\ \mathbf{n}; \tag{2.18}$$

- the *tangential stress* $\boldsymbol{\tau}$:

$$\boldsymbol{\tau} = \mathbf{t} - \boldsymbol{\nu} = (\mathbf{I} - \mathbf{n} \otimes \mathbf{n})\mathbf{t} = (\mathbf{I} - \mathbf{n} \otimes \mathbf{n})\boldsymbol{\sigma}\ \mathbf{n}. \tag{2.19}$$

2.4 Balance equations

We can now write the balance equations for any part β of Ω. The Euler's axioms stipulate that $\forall \beta \subset \Omega$, the force resultant and the moment resultant are null. Let us start examining first the force resultant:

$$\int_\beta \mathbf{b}\ dv + \int_{\partial\beta} \mathbf{t}\ ds = \int_\beta \rho\ \ddot{p}\ dv \quad \forall \beta \subset \Omega. \tag{2.20}$$

Applying the Cauchy's theorem we get

$$\int_\beta \mathbf{b} - \rho\ \ddot{p}\ dv + \int_{\partial\beta} \boldsymbol{\sigma}\ \mathbf{n}\ ds = \mathbf{o} \quad \forall \beta \subset \Omega, \tag{2.21}$$

and for the tensor form of the Gauss theorem

$$\int_\beta (\mathbf{b} - \rho\ \ddot{p} + \mathrm{div}\boldsymbol{\sigma})\ dv = \mathbf{o} \quad \forall \beta \subset \Omega. \tag{2.22}$$

The only possibility for this integral to be null $\forall \beta \subset \Omega$ is the integrand to be identically null:

$$\mathbf{b} + \mathrm{div}\boldsymbol{\sigma} = \rho\ \ddot{p} \quad \forall p \in \Omega. \tag{2.23}$$

These are the *Cauchy-Poisson equations of motion for classical continuum bodies.* They generalize to each point of a deformable body the second principle of dynamics of Newton. In case of equilibrium, $\ddot{p} = \mathbf{o}$ and we obtain the *equilibrium equations*

$$\mathbf{b} + \mathrm{div}\boldsymbol{\sigma} = \mathbf{o} \quad \forall p \in \Omega. \tag{2.24}$$

In terms of components, the above equations read like

$$b_i + \sigma_{ij,j} = \rho\ \ddot{p}_i, \quad i,j = 1,2,3. \tag{2.25}$$

Let us now turn the attention on the moment resultant on β:

$$\int_\beta (p-o) \times \mathbf{b}\ dv + \int_{\partial\beta} (p-o) \times \mathbf{t}\ ds = \int_\beta \rho (p-o) \times \ddot{p}\ dv \ \ \forall \beta \subset \Omega. \tag{2.26}$$

Still using the Cauchy's theorem we get

$$\int_\beta (p-o) \times (\mathbf{b} - \rho\ \ddot{p})\ dv + \int_{\partial\beta} (p-o) \times (\boldsymbol{\sigma}\mathbf{n})\ ds = \mathbf{o} \ \ \forall \beta \subset \Omega \tag{2.27}$$

and introducing, first, the axial tensor $\mathbf{W}$ of $(p-o)$

$$\int_\beta \mathbf{W}(\mathbf{b} - \rho\ \ddot{p})\ dv + \int_{\partial\beta} \mathbf{W}(\boldsymbol{\sigma}\mathbf{n})\ ds = \mathbf{o} \ \ \forall \beta \subset \Omega, \tag{2.28}$$

then the motion equation and the Gauss theorem, we obtain

$$\int_\beta \mathrm{div}(\mathbf{W}\boldsymbol{\sigma}) - \mathbf{W}\mathrm{div}\boldsymbol{\sigma}\ dv = \mathbf{o} \ \ \forall \beta \subset \Omega, \tag{2.29}$$

that, for being true $\forall \beta \subset \Omega$, gives the condition

$$\mathrm{div}(\mathbf{W}\boldsymbol{\sigma}) = \mathbf{W}\mathrm{div}\boldsymbol{\sigma} \ \ \forall p \in \Omega. \tag{2.30}$$

We now develop:

$$\begin{aligned} \mathrm{div}(\mathbf{W}\boldsymbol{\sigma}) &= (\mathbf{W}\boldsymbol{\sigma})_{ij,j}\ \mathbf{e}_i = (W_{ik}\ \sigma_{kj})_{,j}\ \mathbf{e}_i \\ &= W_{ik,j}\ \sigma_{kj}\ \mathbf{e}_i + W_{ik}\ \sigma_{kj,j}\ \mathbf{e}_i = W_{ik,j}\ \sigma_{kj}\ \mathbf{e}_i + \mathbf{W}\ \mathrm{div}\boldsymbol{\sigma}, \end{aligned} \tag{2.31}$$

and injecting this result into eq. (2.30) gives

$$W_{ik,j}\sigma_{kj} = 0\ \forall i = 1,2,3. \tag{2.32}$$

For a generic point $p = (p_1, p_2, p_3) \in \Omega$,

$$\mathbf{W} = \begin{bmatrix} 0 & -p_3 & p_2 \\ p_3 & 0 & -p_1 \\ -p_2 & p_1 & 0 \end{bmatrix}, \tag{2.33}$$

so that $W_{12,3} = -1, W_{13,2} = 1$ etc. Injecting these results into eq. (2.32) for $i = 1,2,3$ gives

$$\begin{aligned} i = 1 &\ \rightarrow\ \sigma_{23} = \sigma_{32}, \\ i = 2 &\ \rightarrow\ \sigma_{13} = \sigma_{31}, \quad \Rightarrow \quad \boldsymbol{\sigma} = \boldsymbol{\sigma}^\top. \\ i = 3 &\ \rightarrow\ \sigma_{12} = \sigma_{21}, \end{aligned} \tag{2.34}$$

So, for classical continuum bodies, the balance of the couples corresponds to the symmetry of $\boldsymbol{\sigma}$.

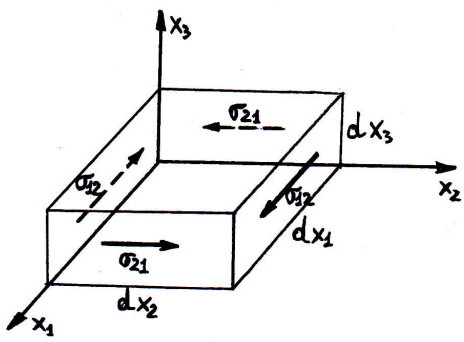

Figure 2.5: Reciprocity of the shear stresses.

There are at least two other ways to prove the *reciprocity of the shear stresses*, i.e. the symmetry of $\boldsymbol{\sigma}$, both of them more *mechanical* then the previous one. In the first one, we consider a parallelepiped with the faces parallel to the axes, like in Fig. 2.5. If, e.g., we focus on the balance of the torque around axis x_3, body forces and tractions on the horizontal faces give higher order contributions and can be discarded, so we have

$$(\sigma_{21} + \frac{\partial \sigma_{21}}{\partial x_1} dx_1) dx_1 dx_2 dx_3 = (\sigma_{12} + \frac{\partial \sigma_{12}}{\partial x_2} dx_2) dx_1 dx_2 dx_3, \tag{2.35}$$

and neglecting higher order terms we get $\sigma_{12} = \sigma_{21}$; in a similar way we obtain also $\sigma_{13} = \sigma_{31}$ and $\sigma_{23} = \sigma_{32}$.

The other method to prove the symmetry of $\boldsymbol{\sigma}$ is based upon the use of the *Principle of Virtual Displacements*: for each possible infinitesimal rigid displacement field $\mathbf{w}$, the balance equations are satisfied if and only if

$$\int_{\partial\beta} \mathbf{t} \cdot \mathbf{w} \; ds + \int_{\beta} (\mathbf{b} - \rho \, \ddot{p}) \cdot \mathbf{w} \; dv = 0. \tag{2.36}$$

In fact, using the Cauchy's and Gauss's theorems we have

$$\begin{aligned} \int_{\partial\beta} \mathbf{t} \cdot \mathbf{w} \; ds &= \int_{\partial\beta} \boldsymbol{\sigma} \; \mathbf{n} \cdot \mathbf{w} \; ds = \int_{\partial\beta} \boldsymbol{\sigma}^\top \mathbf{w} \cdot \mathbf{n} \; ds \\ &= \int_{\beta} \mathrm{div}(\boldsymbol{\sigma}^\top \mathbf{w}) dv = \int_{\beta} (\mathbf{w} \cdot \mathrm{div}\boldsymbol{\sigma} + \boldsymbol{\sigma} \cdot \nabla \mathbf{w}) dv. \end{aligned} \tag{2.37}$$

Using the equation of mouvement (2.23) for expressing $\mathrm{div}\boldsymbol{\sigma}$, we have

$$\int_{\partial\beta} \mathbf{t} \cdot \mathbf{w} \; ds + \int_{\beta} (\mathbf{b} - \rho \, \ddot{p}) \cdot \mathbf{w} \; dv = \int_{\beta} \boldsymbol{\sigma} \cdot \nabla \mathbf{w} \; dv \quad \forall \beta \subset \Omega. \tag{2.38}$$

The left-hand member is null for a body at equilibrium, for the Principle of Virtual Displacements; so, because the above equation must be satisfied $\forall \beta \subset \Omega$, we obtain the condition

$$\boldsymbol{\sigma} \cdot \nabla \mathbf{w} = 0 \quad \forall p \in \Omega, \tag{2.39}$$

to be satisfied $\forall \mathbf{w}$ rigid and infinitesimal $\Rightarrow$ $\nabla \mathbf{w} = -\nabla^\top \mathbf{w}$ [2], so that $\boldsymbol{\sigma}$ is necessarily symmetric[3].

[2]For any rigid displacement, $\boldsymbol{\varepsilon} = \mathbf{O}$, which implies $\nabla \mathbf{w} = -\nabla^\top \mathbf{w}$.

[3]This is a consequence of the following

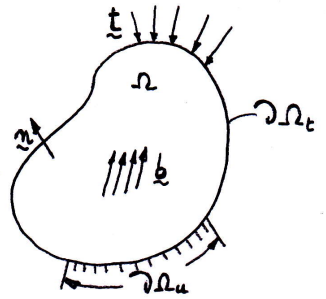

Figure 2.6: Scheme of the boundary conditions.

2.5 Boundary conditions

The balance equations (2.23) must be completed by adequate boundary conditions. To this purpose, we consider the general situation depicted in Fig. (2.6):

- the whole boundary $\partial\Omega$ is composed of two complementary parts, $\partial\Omega_u$ and $\partial\Omega_t$, such that
$$\partial\Omega = \partial\Omega_u \cup \partial\Omega_t, \quad \partial\Omega_u \cap \partial\Omega_t = \emptyset; \tag{2.40}$$

- on $\partial\Omega_u$ the displacement vector is known:
$$\mathbf{u} = \mathbf{u}_0, \tag{2.41}$$
typically $\mathbf{u}_0 = \mathbf{o}$; these are the *kinematical boundary conditions*;

- on $\partial\Omega_t$ the traction vector is known:
$$\mathbf{t} = \boldsymbol{\sigma}\ \mathbf{n} = \mathbf{t}_0; \tag{2.42}$$
these are the *natural boundary conditions.*

Theorem. *A tensor* $\mathbf{L}$ *is orthogonal to any skew tensor* $\mathbf{W} \iff \mathbf{L} = \mathbf{L}^\top$.

Proof. We prove first that if $\mathbf{L}$ is symmetric and $\mathbf{W}$ skew, then they are necessarily orthogonal:

$$\mathbf{W}\cdot\mathbf{L} = \mathrm{tr}(\mathbf{W}^\top\mathbf{L}) = -\mathrm{tr}(\mathbf{W}\mathbf{L}) = -\mathrm{tr}(\mathbf{L}\mathbf{W}) = -\mathrm{tr}(\mathbf{L}^\top\mathbf{W}) = -\mathbf{L}\cdot\mathbf{W} = -\mathbf{W}\cdot\mathbf{L} \iff \mathbf{W}\cdot\mathbf{L} = 0.$$

To complete the proof, we must prove that if $\mathbf{L}\cdot\mathbf{W} = 0\ \forall\mathbf{W}:\ \mathbf{W} = -\mathbf{W}^\top$, then $\mathbf{L} = \mathbf{L}^\top$; to this end, let us suppose that $\mathbf{L} \neq \mathbf{L}^\top$ and decompose $\mathbf{L}$ in its symmetric and skew parts:

$$\mathbf{L} = \mathbf{L}_1 + \mathbf{L}_2, \quad \mathbf{L}_1 = \frac{\mathbf{L}+\mathbf{L}^\top}{2}, \ \mathbf{L}_1 = \mathbf{L}_1^\top, \quad \mathbf{L}_2 = \frac{\mathbf{L}-\mathbf{L}^\top}{2}, \ \mathbf{L}_2 = -\mathbf{L}_2^\top.$$

So,

$$\mathbf{L}\cdot\mathbf{W} = \mathbf{L}_1\cdot\mathbf{W} + \mathbf{L}_2\cdot\mathbf{W} = 0;$$

the first term on the right-hand side is null, as we have just proved, because $\mathbf{L}_1$ is symmetric and $\mathbf{W}$ is skew; so, it must be $\mathbf{L}_2\cdot\mathbf{W} = 0\ \forall\mathbf{W} = -\mathbf{W}^\top$. Because $\mathbf{L}_2$ is skew, we can chose $\mathbf{W} = \mathbf{L}_2$; then, for the same definition of scalar product, we get $\mathbf{L}_2\cdot\mathbf{L}_2 = 0 \iff \mathbf{L}_2 = \mathbf{O}$, which proves the theorem. □

2.6 Principal stresses

The symmetry of $\boldsymbol{\sigma}$, just as for $\boldsymbol{\varepsilon}$, brings, through the spectral theorem, the existence of three real eigenvalues, say $\sigma_1 \geq \sigma_2 \geq \sigma_3$: the *principal stresses*. The eigenvectors of $\boldsymbol{\sigma}$ form a base, say $v = \{\mathbf{v}_1, \mathbf{v}_2, \mathbf{v}_3\}$, the base of the *principal directions of stress*; in the base $v, \boldsymbol{\sigma}$ is diagonal:

$$\boldsymbol{\sigma} = \sigma_i \ \mathbf{v}_i \otimes \mathbf{v}_i, \ i = 1, 2, 3, \ \rightarrow \ \boldsymbol{\sigma} = \begin{bmatrix} \sigma_1 & 0 & 0 \\ 0 & \sigma_2 & 0 \\ 0 & 0 & \sigma_3 \end{bmatrix}. \tag{2.43}$$

It is then clear, using the Cauchy's theorem, that the traction on surfaces orthogonal to the principal directions of stress v_i is composed uniquely by a normal stress: the principal directions are normal to surfaces where the shear stress is null.

The envelop, throughout Ω, of the principal directions of the stress form a family of lines called the *isostatic lines*, that have the following property: along an isostatic line, the matter is simply subjected to tension or compression, not to shear too. The isostatic lines are hence the *lines of best use of the matter*: an effective structure is a structure where the matter follows as much as possible the isostatic lines. In Nature, the selection has produced a great amount of exemples where the matter tends to be distributed along the isostatic lines, e.g. in the bones, trees etc.

For the property of maximality of the eigenvalues, see Exercise 6, Chapt. 1, σ_1 is the highest value of the normal stress, σ_3 the minimal value and σ_2 an intermediate value (a local extremal).

2.7 Work balance

Let us consider a small virtual displacement, $\delta\mathbf{u}$ of Ω; for the smallness of $\delta\mathbf{u}$ we can assume that the stress distribution is not altered by it. Then, at the equilibrium, $\forall \beta \subset \Omega$ it will be, through the Cauchy and Gauss theorems,

$$\begin{aligned} \int_{\partial\beta} \mathbf{t} \cdot \delta\mathbf{u} \ ds &= \int_{\partial\beta} \boldsymbol{\sigma} \ \mathbf{n} \cdot \delta\mathbf{u} \ ds = \int_{\partial\beta} \boldsymbol{\sigma}^\top \delta\mathbf{u} \cdot \mathbf{n} \ ds \\ &= \int_\beta \mathrm{div}(\boldsymbol{\sigma}^\top \delta\mathbf{u}) \ dv = \int_\beta (\delta\mathbf{u} \cdot \mathrm{div}\boldsymbol{\sigma} + \boldsymbol{\sigma} \cdot \nabla\delta\mathbf{u}) dv, \end{aligned} \tag{2.44}$$

and using the equilibrium equations and the symmetry of $\boldsymbol{\sigma}$ we get

$$\int_{\partial\beta} \mathbf{t} \cdot \delta\mathbf{u} \ ds = \int_\beta \left(-\mathbf{b} \cdot \delta\mathbf{u} + \boldsymbol{\sigma} \cdot \frac{\nabla\delta\mathbf{u} + \nabla^\top\delta\mathbf{u}}{2} + \boldsymbol{\sigma} \cdot \frac{\nabla\delta\mathbf{u} - \nabla^\top\delta\mathbf{u}}{2} \right) dv. \tag{2.45}$$

The last term in the integrand is null because it is the scalar product of a symmetric and a skew tensor; the terms

$$\begin{aligned} \delta V &= \int_\beta \mathbf{b} \cdot \delta\mathbf{u} \ dv, \\ \delta W &= \int_{\partial\beta} \mathbf{t} \cdot \delta\mathbf{u} \ ds, \end{aligned} \tag{2.46}$$

represent, respectively, the work done by the internal, remote, forces on β and by the surface, contact, forces on $\partial\beta$, work due to the variation $\delta\mathbf{u}$. The term

$$\delta\boldsymbol{\varepsilon} = \frac{\nabla\delta\mathbf{u} + \nabla^\top\delta\mathbf{u}}{2} \tag{2.47}$$

is the variation of strain caused by the variation $\delta\mathbf{u}$, so that the term

$$\delta U_\Omega = \int_\beta \boldsymbol{\sigma}\cdot\delta\boldsymbol{\varepsilon}\ dv \tag{2.48}$$

represents the work done by the internal actions for the deformation of Ω. Finally, we have the balance

$$\delta W + \delta V = \delta U_\Omega. \tag{2.49}$$

The volume density of δU_Ω is[4]

$$\delta U = \boldsymbol{\sigma}\cdot\delta\boldsymbol{\varepsilon} = \boldsymbol{\sigma}\cdot\nabla\delta\mathbf{u}. \tag{2.50}$$

2.8 Exercises

1. Consider the *plane stress state*

$$\boldsymbol{\sigma} = \begin{bmatrix} \sigma_{11} & \sigma_{12} & 0 \\ \sigma_{12} & \sigma_{22} & 0 \\ 0 & 0 & 0 \end{bmatrix};$$

   i. find the normal, $\boldsymbol{\nu}$, and tangential, $\boldsymbol{\tau}$, stress on a surface of normal $\mathbf{n} = (\cos\theta, \sin\theta, 0)$;

   ii. show that, in the plane $\nu - \tau$, the points representing the stress state belong to a circle (the *Mohr's circle*);

   iii. which is the physical meaning of the centre, radius and intersection with the axes of the Mohr's circle?

   iv. generalize the Mohr's circle to 3D stress states.

2. Show that $\boldsymbol{\sigma}$ is uniquely determined by the system of applied forces.

3. Assume that $\mathbf{t} = \mathbf{o}$ on $\partial\Omega$; show that $\forall p \in \partial\Omega$ the traction $\mathbf{t}$ on each plane orthogonal to $\partial\Omega$ is tangent to $\partial\Omega$.

---

[4]

$$\boldsymbol{\sigma}\cdot\boldsymbol{\varepsilon} = \boldsymbol{\sigma}\cdot\frac{\nabla\mathbf{u} + \nabla^\top\mathbf{u}}{2} = \frac{1}{2}(\boldsymbol{\sigma}\cdot\nabla\mathbf{u} + \boldsymbol{\sigma}\cdot\nabla^\top\mathbf{u}) = \frac{1}{2}(\boldsymbol{\sigma}\cdot\nabla\mathbf{u} + \boldsymbol{\sigma}^\top\cdot\nabla^\top\mathbf{u})$$

because $\boldsymbol{\sigma} = \boldsymbol{\sigma}^\top$; but, generally speaking, for any two tensors $\mathbf{A}$ and $\mathbf{B}$, $\mathbf{A}\cdot\mathbf{B} = \mathbf{A}^\top\cdot\mathbf{B}^\top$ so that

$$\boldsymbol{\sigma}\cdot\boldsymbol{\varepsilon} = \frac{1}{2}(\boldsymbol{\sigma}\cdot\nabla\mathbf{u} + \boldsymbol{\sigma}\cdot\nabla\mathbf{u}) = \boldsymbol{\sigma}\cdot\nabla\mathbf{u}.$$

4. Study the following cases of elementary stress states:

   a) *hydrostatic stress*: it is that of a fluid at rest, that can exert only a compressive normal stress;

   b) *pure extension*: $\boldsymbol{\sigma} = \sigma\ \mathbf{e} \otimes \mathbf{e}, \quad |\mathbf{e}| = 1, \quad \sigma \in \mathbb{R}$;

   c) *pure shear*: $\boldsymbol{\sigma} = \tau(\mathbf{m} \otimes \mathbf{n} + \mathbf{n} \otimes \mathbf{m}), \quad |\mathbf{m}| = |\mathbf{n}| = 1,\ \mathbf{m} \cdot \mathbf{n} = 0,\ \tau \in \mathbb{R}$.

   For each one of these cases:

   i. describe the stress state;

   ii. find analytically the principal stresses and the principal directions of the stress;

   iii. trace and study the Mohr's circle.

5. Be $\sigma_1 > \sigma_2 > \sigma_3$ the eigenvalues of $\boldsymbol{\sigma}$ (principal stresses);

   i. show that $\boldsymbol{\sigma}_1 > \mathbf{n} \cdot \boldsymbol{\sigma}\ \mathbf{n} > \sigma_3 \quad \forall \mathbf{n}, |\mathbf{n}| = 1$;

   ii. be $\mathbf{m} \cdot \mathbf{n} = 0,\ |\mathbf{m}| = 1$; then show that

   $$\max(\mathbf{m} \cdot \boldsymbol{\sigma}\ \mathbf{n}) = \frac{1}{2}(\sigma_1 - \sigma_3),$$

   and that it is attained for

   $$\mathbf{m} = \frac{1}{\sqrt{2}}(\mathbf{e}_3 - \mathbf{e}_1), \quad \mathbf{n} = \frac{1}{\sqrt{2}}(\mathbf{e}_1 + \mathbf{e}_3),$$

   with $\mathbf{e}_i$ the principal directions of the stress;

   iii. interpret all this with the Mohr's circle.

6. Consider a vector $\mathbf{x} = p - o = \ell\mathbf{n},\ |\mathbf{n}| = 1$ and the value ν of the normal stress on a surface orthogonal to $\mathbf{n}$ in o:

   $$\nu = \mathbf{n} \cdot \boldsymbol{\sigma}\ \mathbf{n} \ \rightarrow\ \nu\ell^2 = \mathbf{x} \cdot \boldsymbol{\sigma}\ \mathbf{x};$$

   the quadric

   $$\mathbf{x} \cdot \boldsymbol{\sigma}\ \mathbf{x} = \pm\frac{k^2}{\ell^2}$$

   is called the *stress quadric*.

   i. write the stress quadric in the principal base of the stress;

   ii. which is the utility of the stress quadric?

   iii. examine the cases:

   a) $\sigma_1 > \sigma_2 > \sigma_3 > 0$,

   b) $\sigma_1 > \sigma_2 > 0 > \sigma_3$,

   c) $\sigma_1 > 0 > \sigma_2 > \sigma_3$,

   considering for the three cases the two possible situations $\pm k^2/\ell^2$;

   iv. find the stress quadric for the three elementary stress states of Ex. 4.

7. Find the *principal shearing stress*, i.e. the stationary values, with respect to the direction $\mathbf{n}$, of the tangential stress τ on an element of normal $\mathbf{n}$. Express then the same result with $\boldsymbol{\sigma}$ given in the principal base of the stress and represent the results with the circles of Mohr.

8. Find τ_{oct}, the *octahedral shearing stress*, i.e. the value of the shearing stress on a surface element orthogonal to the trisectrix of the first octant of the principal stress directions frame.

9. The decomposition of $\boldsymbol{\varepsilon}$ introduced in Sect. 1.8 in spherical and deviatoric parts is, of course, possible for $\boldsymbol{\sigma}$ too. Write this decomposition and give a physical interpretation of the scalar that appears in the expression of the spherical part. Find then this decomposition for the elementary cases of stress state of Ex. 4.

10. Define the *principal invariants* of $\boldsymbol{\sigma}$, as well as of any other $2^{nd}-$rank tensor, like

$$\mathcal{I}_1 = \mathrm{tr}\boldsymbol{\sigma}, \quad \mathcal{I}_2 = \frac{1}{2}(\mathrm{tr}\boldsymbol{\sigma}^2 - \mathrm{tr}^2\boldsymbol{\sigma}), \quad \mathcal{I}_3 = \det\boldsymbol{\sigma};$$

then, show that:

i. $\mathcal{I}_2^d = \dfrac{2}{3}(\tau_1^2 + \tau_2^2 + \tau_3^2)$,

ii. $\mathcal{I}_2^d = \dfrac{3}{2}\tau_{oct}^2$,

where $\mathcal{I}_2^d$ is the second principal invariant of $\boldsymbol{\sigma}_d$, the deviatoric part of $\boldsymbol{\sigma}$, while the τ_i are the principal shearing stresses.

11. Show that $\boldsymbol{\sigma}$ and $\boldsymbol{\sigma}^d$ share the same principal directions but not necessarily the same principal values.

12. A stress state is defined by

$$\boldsymbol{\sigma} = \begin{bmatrix} \sigma_{11} & 0 & \sigma_{13} \\ 0 & \sigma_{22} & 0 \\ \sigma_{13} & 0 & \sigma_{33} \end{bmatrix}, \quad \text{with } \sigma_{33} = (1 + \frac{t}{\tau})\frac{x_1^2 + x_3^2}{\alpha^2}, \ \alpha, \tau \in \mathbb{R},$$

t being the time. Find the principal stresses and the principal directions of stress everywhere and $\forall t$. Give the Mohr's representation of the stress state for $t = 0, x_1 = x_3 = 1$.

13. Show that the vector $(\mathbf{I} - \mathbf{n} \otimes \mathbf{n})\boldsymbol{\sigma}\ \mathbf{n}$, $|\mathbf{n}| = 1$ takes its minimum norm, zero, if and only if $\mathbf{n}$ is a principal direction for $\boldsymbol{\sigma}$.

14. Be $\boldsymbol{\sigma} = \sigma_1 \mathbf{e} \otimes \mathbf{e} + \sigma_2(\mathbf{I} - \mathbf{e} \otimes \mathbf{e})$, $|\mathbf{e}| = 1$ and $\sigma \in [\sigma_1, \sigma_2]$. Show that $\forall \mathbf{n}, |\mathbf{n}| = 1$, such that $\mathbf{n} \cdot \boldsymbol{\sigma}\ \mathbf{n} = \sigma$, the norm of the vector of Ex. 13 has constant value

$$\tau = \sqrt{(\sigma - \sigma_1)(\sigma_2 - \sigma)}.$$

Chapter 3

Classical elasticity

3.1 Constitutive equations

Let us consider the most general problem of the equilibrium of deformable bodies (refer to Fig. 2.6): a deformable body Ω is

- acted upon by body forces $\mathbf{b}$ on Ω;
- subjected to tractions $\mathbf{t}_0$ on $\partial\Omega_t$;
- constraint to the displacement $\mathbf{u}_0$ on $\partial\Omega_u$.

The problem is to find:

- the deformed configuration Ω_t, i.e. the vector field of the displacement $\mathbf{u} = \mathbf{u}(p)$;
- the tensor field of infinitesimal strain $\boldsymbol{\varepsilon} = \boldsymbol{\varepsilon}(p)$;
- the tensor field of stress $\boldsymbol{\sigma} = \boldsymbol{\sigma}(p)$.

The fundamental assumption is that strain and displacement are infinitesimal, so that $\Omega_t \simeq \Omega$, so that the equilibrium equations can be written on the reference configuration Ω. The unknown of the problem are 15 scalar fields:

- the 3 components of $\mathbf{u}$: $u_i = u_i(p),\ i = 1, 2, 3$;
- the 6 distinct components of $\boldsymbol{\varepsilon}$: $\varepsilon_{ij} = \varepsilon_{ij}(p),\ i, j = 1, 2, 3,\ \varepsilon_{ij} = \varepsilon_{ji}$;
- the 6 distinct components of $\boldsymbol{\sigma}$: $\sigma_{ij} = \sigma_{ij}(p),\ i, j = 1, 2, 3,\ \sigma_{ij} = \sigma_{ji}$.

The equations at our disposal are 9:

- the 6 relations displacement-strain:

$$\boldsymbol{\varepsilon} = \frac{\nabla\mathbf{u} + \nabla^\top\mathbf{u}}{2} \ \rightarrow\ \varepsilon_{ij} = \frac{u_{i,j} + u_{j,i}}{2},\ i, j = 1, 2, 3,\ \varepsilon_{ij} = \varepsilon_{ji}; \tag{3.1}$$

- the 3 equilibrium equations:

$$\mathrm{div}\boldsymbol{\sigma} + \mathbf{b} = \mathbf{o} \ \rightarrow\ \sigma_{ij,j} + b_i = 0,\ i, j = 1, 2, 3. \tag{3.2}$$

These are the only general, i.e. valid for any solid, that can be written. There is hence a lack of 6 equations. This fact shows that the description of the equilibrium problem by uniquely geometry and mechanical balance is not sufficient: 6 other equations are needed for the problem closure.

These 6 equations must introduce what is still absent in the general equations: the behavior of the material. Such equations are called *constitutive equations*, and they give the link between $\boldsymbol{\sigma}$ and $\boldsymbol{\varepsilon}$. Generally speaking,

$$\sigma_{ij} = \sigma_{ij}(\mathbf{u}, \boldsymbol{\varepsilon}, \boldsymbol{\omega}, \boldsymbol{\varepsilon}_{,t}, \boldsymbol{\varepsilon}_{,p}, \boldsymbol{\omega}_{,t}, \boldsymbol{\omega}_{,p}). \tag{3.3}$$

Nonetheless, some requirements must be fulfilled by the constitutive equations:

- the mechanical behavior of a body must be independent from the place and orientation; as a consequence, any dependence from rigid translations and rotations must vanish $\Rightarrow \boldsymbol{\sigma}$ cannot be a function of $\mathbf{u}$ nor of $\boldsymbol{\omega}$;
- as a consequence, we are left with

$$\boldsymbol{\sigma} = \boldsymbol{\sigma}(\boldsymbol{\varepsilon}, \boldsymbol{\varepsilon}_{,t}, \boldsymbol{\varepsilon}_{,p}); \tag{3.4}$$

- materials whose constitutive equations depend only upon $\boldsymbol{\varepsilon}_{,t}$:

$$\boldsymbol{\sigma} = \boldsymbol{\sigma}(\boldsymbol{\varepsilon}_{,t}) \tag{3.5}$$

  are *viscous fluids*, like the *Newtonian fluids*:

$$\boldsymbol{\sigma} = -p\mathbf{I} + 2\mu\dot{\boldsymbol{\varepsilon}} + \lambda \mathrm{tr}\dot{\boldsymbol{\varepsilon}}\mathbf{I}, \tag{3.6}$$

  with p the pressure, μ and λ the coefficients of viscosity;
- materials whose constitutive equations depend on both $\boldsymbol{\varepsilon}$ and $\boldsymbol{\varepsilon}_{,p}$ are *polar materials*, like some polymers; for them, non-local effects are possible;
- materials whose constitutive equations are of the type

$$\boldsymbol{\sigma} = \boldsymbol{\sigma}(\boldsymbol{\varepsilon}) \tag{3.7}$$

  are *classical solids*, like metals, wood, concrete etc.; in this case, internal stresses σ_{ij} are only functions of the changes in length and in angle of fibers, described by the ε_{ij}.

3.2 Classical elasticity

A *natural state* for a solid is a state for which in the body $\boldsymbol{\varepsilon} = \mathbf{O}$ when applied forces and imposed displacements are null.

Then, *classical elasticity* is a theory concerned with

i. bodies with a natural state;

ii. infinitesimal strain;

iii. bodies for which $\boldsymbol{\sigma}$ is a linear function of $\boldsymbol{\varepsilon}$.

These assumptions give the following type of constitutive law:

$$\boldsymbol{\sigma} = \mathbb{C}\boldsymbol{\varepsilon}; \tag{3.8}$$

this is the *generalized Hooke's law* that, actually, generalizes to 3D elastic bodies the celebrated *Hooke's law*, 1660: *ut tensio sic vis*[1]. The Hooke's law concerned, at the origin, the behavior of springs (Hooke tested clock's springs), or, as he said, of *any springy body*, i.e. of any body whose behavior is similar to that of a spring: elastic bodies. The generalization of the Hooke's law to 3D elastic bodies is due to Cauchy, 1821.

$\mathbb{C}$ is the *elastic (stiffness) tensor*; it describes, by the value of its components, the behavior of the material; relating two second-rank tensors, it is a fourth-rank tensor[2]:

$$\mathbb{C} = \mathbb{C}_{ijkl}\ \mathbf{e}_i \otimes \mathbf{e}_j \otimes \mathbf{e}_k \otimes \mathbf{e}_l, \quad i, j, k, l = 1, 2, 3, \tag{3.9}$$

which gives, for the components of $\boldsymbol{\sigma}$,

$$\sigma_{ij} = \mathbb{C}_{ijkl}\ \varepsilon_{kl} \quad \forall\ i, j, k, l = 1, 2, 3. \tag{3.10}$$

A material whose constitutive equation is of this type is called a *material of Cauchy*. This law implies that for $\boldsymbol{\varepsilon} = \mathbf{O}$, i.e. in the absence of applied forces, $\boldsymbol{\sigma} = \mathbf{O}$ and, of course, the converse: for any null stress state, $\boldsymbol{\varepsilon} = \mathbf{O}$: the body takes its original undeformed configuration when it is not stressed, i.e. when it is not acted upon. This is the most peculiar characteristic of elastic bodies.

The *elastic moduli* $\mathbb{C}_{ijkl}$ are 81; their value must be determined experimentally. This is of course very cumbersome, because 81 independent experimental measures should be done. Nevertheless, we will see that in the end, for the cases interesting for us and very common in practice, only two elastic coefficients are to be determined by laboratory tests.

To this purpose, we introduce two concepts:

i. *homogeneous elastic bodies*; in this case, $\mathbb{C}$ is independent from the position: the $\mathbb{C}_{ijkl}$ are constant all over Ω;

ii. *isotropic elastic bodies*; in this case, $\mathbb{C}$ is insensitive to any rotation: the $\mathbb{C}_{ijkl}$ do not depend upon the direction.

A *homogeneous, isotropic, elastic body* is hence a body whose response is elastic, independent from the position and from the direction. Many important materials, like metal alloys, are of this type. The study of this type of materials is the domain of *classical elasticity*. The following of this text is concerned with problems of classical elasticity.

[1] Hooke discovered this law, empirically, in 1660, but he revealed it, under the form of an anagram, *ceiiinossttuu*, only in 1676 and finally under the final form only in 1678 in his book *De Potentia Restitutiva*.

[2] $\forall\ \mathbf{A}, \mathbf{B}$ and $\mathbf{L} \in Lin(\mathcal{V})$, $\mathbf{A}\otimes\mathbf{B}$ is the fourth-rank tensor defined by the operation $(\mathbf{A}\otimes\mathbf{B})\mathbf{L} := (\mathbf{B}\cdot\mathbf{L})\mathbf{A}$. Applying this rule to the dyads of a basis, we get a fundamental result: $[(\mathbf{e}_i \otimes \mathbf{e}_j) \otimes (\mathbf{e}_k \otimes \mathbf{e}_l)]\,(\mathbf{e}_p \otimes \mathbf{e}_q) = (\mathbf{e}_k \otimes \mathbf{e}_l) \cdot (\mathbf{e}_p \otimes \mathbf{e}_q)(\mathbf{e}_i \otimes \mathbf{e}_j) = \delta_{kp}\delta_{lq}(\mathbf{e}_i \otimes \mathbf{e}_j)$.

3.3 Reduction of the number of elastic moduli

Let us see now how from 81 moduli we arrive to only 2. The first reduction is due to the symmetry of $\boldsymbol{\sigma}$ and $\boldsymbol{\varepsilon}$:

$$\begin{aligned} \sigma_{ij} = \sigma_{ji} \;&\rightarrow\; \mathbb{C}_{ijkl}\,\varepsilon_{kl} = \mathbb{C}_{jikl}\,\varepsilon_{kl} \;\Rightarrow\; \mathbb{C}_{ijkl} = \mathbb{C}_{jikl}, \\ \varepsilon_{kl} = \varepsilon_{lk} \;&\rightarrow\; \mathbb{C}_{ijkl}\,\varepsilon_{kl} = \mathbb{C}_{jilk}\,\varepsilon_{lk} \;\Rightarrow\; \mathbb{C}_{ijkl} = \mathbb{C}_{jilk}. \end{aligned} \tag{3.11}$$

Hence, we have the following 45 conditions, called *minor symmetries*[3],

$$\mathbb{C}_{ijkl} = \mathbb{C}_{jikl} = \mathbb{C}_{ijlk} = \mathbb{C}_{jilk}, \tag{3.12}$$

that reduce the number of independent elastic moduli from 81 to 36.

A further reduction is obtained postulating that the material is a *material of Green* (1839). The volume density of the work of internal actions, see Sect. 2.7, is

$$\delta U = \boldsymbol{\sigma} \cdot \delta\boldsymbol{\varepsilon} = \sigma_{ij}\delta\varepsilon_{ij}. \tag{3.13}$$

To remark that this work per unit volume is stored in the body under the form of an energy (per unit volume): δU represents the variation of the elastic energy, per unit volume, produced by a small variation of the strain state. U is called the *(density of) strain energy* or *elastic potential*. Let us consider a transformation of an elastic body from a state A to a state B. Then, the body is made of a material of Green if the variation δU in passing from A to B is independent from the transformation itself, but it depends uniquely upon the initial and final states:

$$\delta U_{A\rightarrow B} = \int_A^B \delta U = U_B - U_A. \tag{3.14}$$

The consequence of this assumption is that δU must be the exact differential of the elastic energy density U, i.e.

$$dU = \boldsymbol{\sigma} \cdot d\boldsymbol{\varepsilon} = \sigma_{ij}\; d\varepsilon_{ij}, \tag{3.15}$$

which gives the *Green's formula*:

$$\sigma_{ij} = \frac{\partial U}{\partial \varepsilon_{ij}}. \tag{3.16}$$

Then, by the Hooke's law, the Green's formula and the Schwarz theorem, we get

$$\begin{aligned} \mathbb{C}_{ijkl} &= \frac{\partial \sigma_{ij}}{\partial \varepsilon_{kl}} = \frac{\partial^2 U}{\partial \varepsilon_{kl}\partial \varepsilon_{ij}}, \\ \mathbb{C}_{klij} &= \frac{\partial \sigma_{kl}}{\partial \varepsilon_{ij}} = \frac{\partial^2 U}{\partial \varepsilon_{ij}\partial \varepsilon_{kl}}, \end{aligned} \quad \Rightarrow\; \mathbb{C}_{ijkl} = \mathbb{C}_{klij}\;\forall\; i,j,k,l = 1,2,3. \tag{3.17}$$

These 15 relations are called the *major symmetries*; they reduce the number of distinct elastic moduli from 36 to 21.

[3]The word *symmetry* is used here to signify the invariance of an elastic modulus with respect to a permutation of the indexes. The same word, symmetry, is used in elasticity for indicating a transformation that preserves the elastic behavior. The reader should be aware of this somewhat ambiguous double meaning of the same word in the same context, that of elasticity.

No further reduction can be obtained in the most general case, i.e. without introducing special properties (namely, elastic symmetries) of a given elastic material.

To remark that a material of Cauchy is not necessarily a material of Green, and vice-versa. In fact, a material of Cauchy is also of Green if it admits an *elastic potential*, U; this fact has always been verified experimentally for all the elastic materials. A material of Green is also of Cauchy if $\boldsymbol{\sigma}$ is a linear function of $\boldsymbol{\varepsilon}$; this is not always the case.

The most important class of elastic materials is that of *hyperelastic materials*, i.e. of materials that are at the same time of Cauchy and of Green. In such a case, $\boldsymbol{\sigma}$ is a linear function of $\boldsymbol{\varepsilon}$, the material admits an elastic potential U and the Green's formula is valid. Then it must be

$$U = \frac{1}{2}\mathbb{C}_{ijkl}\ \varepsilon_{ij}\ \varepsilon_{kl}, \tag{3.18}$$

i.e. U is necessarily a quadratic function of the ε_{ij}. In fact, only in this way we get, through the Green's formula,

$$\sigma_{ij} = \frac{\partial U}{\partial \varepsilon_{ij}} = \frac{\partial}{\partial \varepsilon_{ij}}\left(\frac{1}{2}\mathbb{C}_{mnpq}\ \varepsilon_{mn}\ \varepsilon_{pq}\right) = \mathbb{C}_{ijpq}\ \varepsilon_{pq}\ \rightarrow\ \boldsymbol{\sigma} = \mathbb{C}\boldsymbol{\varepsilon}, \tag{3.19}$$

i.e. we satisfy at the same time to the fundamental relations of Green and Cauchy materials. In such a way, it is also

$$U = \frac{1}{2}\mathbb{C}_{ijkl}\ \varepsilon_{ij}\ \varepsilon_{kl} = \frac{1}{2}\boldsymbol{\varepsilon}\cdot\mathbb{C}\boldsymbol{\varepsilon} = \frac{1}{2}\boldsymbol{\sigma}\cdot\boldsymbol{\varepsilon}. \tag{3.20}$$

We will see further that $\mathbb{C}$ is a positive definite tensor, which implies that it is inversible, i.e.

$$\exists\mathbb{S}:\quad \boldsymbol{\varepsilon} = \mathbb{S}\boldsymbol{\sigma}\ \Rightarrow\ \mathbb{S} = \mathbb{C}^{-1}. \tag{3.21}$$

So,

$$\varepsilon_{ij} = \mathbb{S}_{ijkl}\sigma_{kl}, \tag{3.22}$$

which injected in the general expression (3.18) of U gives

$$U = \frac{1}{2}\mathbb{S}_{ijkl}\sigma_{ij}\sigma_{kl}, \tag{3.23}$$

so that, deriving with respect to σ_{ij}, we get

$$\varepsilon_{ij} = \mathbb{S}_{ijkl}\sigma_{kl} = \frac{\partial U}{\partial \sigma_{ij}}, \tag{3.24}$$

which is the dual, for the strains, of the Green's formula.

In the most general case, the behavior of hyper elastic materials depends upon 21 distinct moduli: this is the case of *completely anisotropic* or *triclinic* materials. The behavior of an anisotropic material depends upon the direction, hence the moduli $\mathbb{C}_{ijkl}$ are frame-dependent quantities.

This cannot be the case of isotropic materials, whose elastic response is insensitive to a change of frame: the elastic moduli of an isotropic material cannot be frame-dependent.

This means that for an isotropic material, U cannot depend upon the ε_{ij}, that are frame-dependent quantities, but rather on the *invariants* of $\boldsymbol{\varepsilon}$[4]. As a consequence, being U a quadratic fonction of the ε_{ij}, the general expression of U must be of the type

$$U = \frac{1}{2} c_1 I_1^2 + c_2 I_2, \tag{3.25}$$

with[5]

$$I_1 = \mathrm{tr}\boldsymbol{\varepsilon} = \varepsilon_{ii}, \quad I_2 = \frac{\mathrm{tr}^2\boldsymbol{\varepsilon} - \mathrm{tr}\boldsymbol{\varepsilon}^2}{2} = \frac{\varepsilon_{ii}\ \varepsilon_{jj} - \varepsilon_{ij}\ \varepsilon_{ji}}{2}. \tag{3.26}$$

The third order invariant of $\boldsymbol{\varepsilon}$, i.e. $\det \boldsymbol{\varepsilon}$, cannot enter in the expression of U, because it is a cubic function of the ε_{ij}, while U must be a quadratic function of the ε_{ij}. Then,

$$U = \frac{1}{2}\left[(c_1 + c_2)\varepsilon_{ii}\ \varepsilon_{jj} - c_2\ \varepsilon_{ij}\ \varepsilon_{ji}\right], \tag{3.27}$$

so that[6]

$$\begin{aligned} \sigma_{\underline{ii}} &= \frac{\partial U}{\partial \varepsilon_{\underline{ii}}} = (c_1 + c_2)\varepsilon_{ii} - c_2\ \varepsilon_{\underline{ii}}, \\ \sigma_{ij} &= \frac{\partial U}{\partial \varepsilon_{ij}} = -c_2\ \varepsilon_{ji} = -c_2\ \varepsilon_{ij}. \end{aligned} \tag{3.28}$$

For instance:

$$\begin{aligned} \sigma_{11} &= \frac{\partial U}{\partial \varepsilon_{11}} = (c_1 + c_2)(\varepsilon_{11} + \varepsilon_{22} + \varepsilon_{33}) - c_2\ \varepsilon_{11}, \\ \sigma_{12} &= \frac{\partial U}{\partial \varepsilon_{12}} = -c_2\ \varepsilon_{12} \quad \text{etc.} \end{aligned} \tag{3.29}$$

We see hence that in the case of isotropic materials, only two constants are sufficient to characterize the elastic behavior.

3.4 Equations of Lamé

Classically, we pose

$$c_1 + c_2 = \lambda, \quad -\frac{c_2}{2} = \mu \quad \Rightarrow \ c_1 = \lambda + 2\mu, \tag{3.30}$$

and we get, in compact form,

$$\sigma_{ij} = 2\mu\ \varepsilon_{ij} + \lambda\ \varepsilon_{kk}\ \delta_{ij}, \tag{3.31}$$

[4]The elastic energy U is, as any other quantity derived by a scalar product, an invariant, i.e. it is not frame-dependent. Hence, because $\mathbb{C}$ for an isotropic material is frame independent, the expression of U cannot depend upon frame-dependent quantities, the ε_{ij}, but only upon frame-independent functions of the ε_{ij}: the invariants of $\boldsymbol{\varepsilon}$.

[5]$\boldsymbol{\varepsilon}^2 = \boldsymbol{\varepsilon}\boldsymbol{\varepsilon} = \varepsilon_{ij}\mathbf{e}_i \otimes \mathbf{e}_j\ \varepsilon_{hk}\mathbf{e}_h \otimes \mathbf{e}_k = \varepsilon_{ij}\ \varepsilon_{hk}\ \mathbf{e}_j \cdot \mathbf{e}_h(\mathbf{e}_i \otimes \mathbf{e}_k) = \varepsilon_{ij}\ \varepsilon_{hk}\ \delta_{jh}(\mathbf{e}_i \otimes \mathbf{e}_k) \rightarrow \mathrm{tr}\boldsymbol{\varepsilon}^2 = \varepsilon_{ij}\ \varepsilon_{hk}\ \delta_{jh}\mathrm{tr}(\mathbf{e}_i \otimes \mathbf{e}_k) = \varepsilon_{ij}\ \varepsilon_{hk}\ \delta_{jh}\delta_{ik} = \varepsilon_{ij}\ \varepsilon_{ji}$.

[6]Following a common practice, when an index is underlined, it is not a dummy index: no summation over it.

or, in tensor form,

$$\boldsymbol{\sigma} = 2\mu\ \boldsymbol{\varepsilon} + \lambda\ \mathrm{tr}\boldsymbol{\varepsilon}\ \mathbf{I}. \tag{3.32}$$

These are the *equations of Lamé* (1852), the constitutive equations for isotropic hyperelastic materials. They provide the 6 scalar equations (there are 6 distinct components for $\boldsymbol{\sigma}$ and $\boldsymbol{\varepsilon}$) for the closure of the elastic problem. λ and μ are the *coefficients of Lamé*: they are the two moduli to be specified for determining the elastic behavior of a material.

The inverse of the equations of Lamé can be easily obtained:

$$\mathrm{tr}\boldsymbol{\sigma} = (2\mu + 3\lambda)\mathrm{tr}\boldsymbol{\varepsilon}\ \rightarrow\ \mathrm{tr}\boldsymbol{\varepsilon} = \frac{\mathrm{tr}\boldsymbol{\sigma}}{2\mu + 3\lambda}, \tag{3.33}$$

that replaced in eq. (3.32) gives, after simple passages,

$$\boldsymbol{\varepsilon} = \frac{1}{2\mu}\left(\boldsymbol{\sigma} - \frac{\lambda}{2\mu + 3\lambda}\mathrm{tr}\boldsymbol{\sigma}\ \mathbf{I}\right). \tag{3.34}$$

Coefficients c_1 and c_2 are never used in the calculations, λ and μ are preferred. The components of $\mathbb{C}$ can be expressed as functions of the Lamé's coefficients (no summation over i and j):

$$\begin{aligned} &\mathbb{C}_{iiii} = c_1 = \lambda + 2\mu, \\ &\mathbb{C}_{iijj} = c_1 + c_2 = \lambda, \\ &\mathbb{C}_{ijij} = -\frac{c_2}{2} = \mu = \frac{\mathbb{C}_{iiii} - \mathbb{C}_{iijj}}{2}, \end{aligned} \qquad i, j = 1, 2, 3, \tag{3.35}$$

the other components are null.

It is often preferred to express the Lamé's equations as functions of two other parameters, the so-called *technical or engineering constants*, having a direct physical meaning and easy to be determined experimentally by a unique traction test. We consider a bar, with a cross section of area A, whose axis coincides with the x_1-axis of a reference frame, submitted to a tensile force f at its ends. We assume that (see the next Chapter on the Saint Venant problem)

$$\sigma_{11} = \frac{f}{A} \tag{3.36}$$

and it is easy to check that the stress tensor

$$\boldsymbol{\sigma} = \sigma_{11}\ \mathbf{e}_1 \otimes \mathbf{e}_1 \tag{3.37}$$

satisfies to the equilibrium equations. So, by the Lamé's equations we get

$$\begin{aligned} \boldsymbol{\varepsilon} &= \frac{1}{2\mu}\left[\sigma_{11}\ \mathbf{e}_1 \otimes \mathbf{e}_1 - \frac{\lambda}{2\mu + 3\lambda}\sigma_{11}\ \mathbf{e}_i \otimes \mathbf{e}_i\right] \\ &= \frac{\sigma_{11}}{2\mu(2\mu + 3\lambda)}\left[2(\lambda + \mu)\mathbf{e}_1 \otimes \mathbf{e}_1 - \lambda(\mathbf{e}_2 \otimes \mathbf{e}_2 + \mathbf{e}_3 \otimes \mathbf{e}_3)\right]. \end{aligned} \tag{3.38}$$

Now, we introduce

- the *Young's modulus* E

$$E := \frac{\sigma_{11}}{\varepsilon_{11}}; \tag{3.39}$$

- the *Poisson's coefficient* ν

$$\nu := -\frac{\varepsilon_{22}}{\varepsilon_{11}} = -\frac{\varepsilon_{33}}{\varepsilon_{11}}. \tag{3.40}$$

Of course, thanks to isotropy, nothing changes if we change the labels of the axes. It is self-evident that E measures the stiffness to extension, i.e. it gives a direct measure of the stiffness of the material. ν, on its side, gives a measure of the so-called *Poisson's effect*: a tension in a direction normally produces a contraction in the transversal directions (an expansion if tension is turned into compression).

We remark that the existence of only two independent elastic parameters means that there are two distinct mechanical phenomena for stressed isotropic materials: they are the extension stiffness and the Poisson's effect.

The above formulae give us the expression of E and ν as functions of the Lamé's coefficients:

$$E = \mu\frac{2\mu + 3\lambda}{\mu + \lambda}, \quad \nu = \frac{\lambda}{2(\mu + \lambda)}; \tag{3.41}$$

the converse relations are easy to be found:

$$\lambda = \frac{\nu\ E}{(1+\nu)(1-2\nu)}, \quad \mu = \frac{E}{2(1+\nu)}, \tag{3.42}$$

while the relations of the technical constants with the Cartesian components are:

$$\begin{aligned} \mathbb{C}_{1111} &= E\frac{1-\nu}{(1+\nu)(1-2\nu)}, \\ \mathbb{C}_{1122} &= E\frac{\nu}{(1+\nu)(1-2\nu)}, \end{aligned} \quad \rightarrow \quad \begin{aligned} E &= \frac{(\mathbb{C}_{1111} - \mathbb{C}_{1122})(\mathbb{C}_{1111} + 2\mathbb{C}_{1122})}{\mathbb{C}_{1111} + \mathbb{C}_{1122}}, \\ \nu &= \frac{\mathbb{C}_{1122}}{\mathbb{C}_{1111} + \mathbb{C}_{1122}}. \end{aligned} \tag{3.43}$$

Technical constants can be used in place of λ and μ for writing the Lamé's equations; using the above equations, it is easy to find that the equations of Lamé can be written also in the following form:

$$\boldsymbol{\sigma} = \frac{E}{1+\nu}\left[\boldsymbol{\varepsilon} + \frac{\nu}{1-2\nu}\mathrm{tr}\boldsymbol{\varepsilon}\ \mathbf{I}\right], \tag{3.44}$$

$$\boldsymbol{\varepsilon} = \frac{1+\nu}{E}\boldsymbol{\sigma} - \frac{\nu}{E}\mathrm{tr}\boldsymbol{\sigma}\ \mathbf{I}. \tag{3.45}$$

Two other technical moduli are sometimes introduced, related to two other possible mechanical situations. For a pure shear stress state, e.g.

$$\boldsymbol{\sigma} = \sigma_{12}(\mathbf{e}_1 \otimes \mathbf{e}_2 + \mathbf{e}_2 \otimes \mathbf{e}_1), \tag{3.46}$$

then

$$\boldsymbol{\varepsilon} = \frac{\sigma_{12}}{2\mu}(\mathbf{e}_1 \otimes \mathbf{e}_2 + \mathbf{e}_2 \otimes \mathbf{e}_1). \tag{3.47}$$

We define *shear modulus* G the quantity

$$G := \frac{\sigma_{12}}{2\varepsilon_{12}}, \tag{3.48}$$

so that

$$G = \mu = \frac{E}{2(1+\nu)}. \tag{3.49}$$

Of course, nothing changes if the axes labels are changed. G, like E, measures a stiffness, in this case that to shearing actions.

Now, we consider a spherical stress state:

$$\boldsymbol{\sigma} = p\,\mathbf{I}, \quad p \in \mathbb{R}, \tag{3.50}$$

so that

$$\boldsymbol{\varepsilon} = \frac{p}{2\mu + 3\lambda}\mathbf{I}. \tag{3.51}$$

The change in volume is

$$\delta v = \mathrm{tr}\boldsymbol{\varepsilon} = \frac{3p}{2\mu + 3\lambda}; \tag{3.52}$$

then, we introduce the *bulk modulus* κ as

$$\kappa := \frac{p}{\delta v} = \frac{2\mu + 3\lambda}{3}. \tag{3.53}$$

κ measures the volume stiffness, i.e. the stiffness to volume changes; it is immediate to find that

$$\kappa = \frac{E}{3(1-2\nu)}. \tag{3.54}$$

To end this part, we remark that the relation (no summation over i)

$$\sigma_{ii} = E\ \varepsilon_{ii} \tag{3.55}$$

shows clearly the linear dependence of stress from strain, as prescribed by the Hooke's law. This is why classical elasticity is also called *linear elasticity*. Experimentally, this is well shown by the results of a common tension test on a steel bar: the typical diagram $\sigma - \varepsilon$ of such a test is represented in Fig. 3.1: the elastic behavior is just the initial, linear phase; the subsequent phase is plasticity, separated from the elastic range by the yielding point; the final phase, with a nonlinear dependence of σ upon ε, is the strain hardening.

3.5 Elastic energy of an isotropic body

The elastic energy is readily written for an isotropic body, introducing eq. (3.32) or (3.44) into eq. (3.18):

$$U = \frac{1}{2}(2\mu\ \mathrm{tr}\boldsymbol{\varepsilon}^2 + \lambda\ \mathrm{tr}^2\boldsymbol{\varepsilon}) \tag{3.56}$$

or equivalently

$$U = \frac{E}{2(1+\nu)}\left(\mathrm{tr}\boldsymbol{\varepsilon}^2 + \frac{\nu}{1-2\nu}\mathrm{tr}^2\boldsymbol{\varepsilon}\right). \tag{3.57}$$

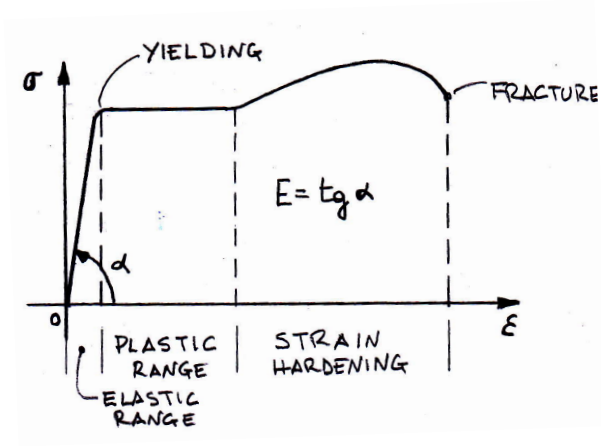

Figure 3.1: Typical $\sigma - \varepsilon$ diagram.

3.6 Bounds on the elastic constants

The elastic moduli cannot take any possible value. In fact, when a body is acted upon by forces, the elastic energy increases necessarily: it stores energy under the form of elastic energy. Physically, this means that external forces do a positive mechanical work to deform an elastic body. Hence, it must be

$$U = \frac{1}{2}\boldsymbol{\varepsilon} \cdot \mathbb{C}\ \boldsymbol{\varepsilon} > 0 \quad \forall \boldsymbol{\varepsilon} \neq \mathbf{O}. \tag{3.58}$$

Mathematically, this is equivalent to impose that $\mathbb{C}$ be a positive definite tensor. Of course, this implies that the $\mathbb{C}_{ijkl}$ must satisfy some conditions, in other words, they are bounded. However, to use this approach to find these bounds is rather cumbersome, because this needs the search of the eigenvalues of $\mathbb{C}$, i.e. the resolution of its characteristic equation. Of course, this is true for every elastic material, not only for the isotropic ones.

A mechanical approach is preferable: because it must be $U > 0\ \forall \boldsymbol{\varepsilon} \neq \mathbf{O}$, one can chose specially simple strain states. Let us see how to proceed for isotropic materials: we first consider a spherical strain state:

$$\boldsymbol{\varepsilon} = \alpha \mathbf{I}, \ \alpha \in \mathbb{R}; \tag{3.59}$$

then

$$U = \frac{1}{2}\boldsymbol{\sigma} \cdot \boldsymbol{\varepsilon} = \frac{1}{2}(2\mu\ \boldsymbol{\varepsilon} + \lambda\ \mathrm{tr}\boldsymbol{\varepsilon}\ \mathbf{I}) \cdot \boldsymbol{\varepsilon} = \frac{\alpha}{2}(2\mu\ \mathrm{tr}\boldsymbol{\varepsilon} + 3\lambda\ \mathrm{tr}\boldsymbol{\varepsilon}) = \frac{3}{2}\alpha^2(2\mu + 3\lambda); \tag{3.60}$$

this value of U is positive $\iff$

$$2\mu + 3\lambda > 0. \tag{3.61}$$

Now, we consider a shearing strain state:

$$\boldsymbol{\varepsilon} = \gamma(\mathbf{e}_i \otimes \mathbf{e}_j + \mathbf{e}_j \otimes \mathbf{e}_i), \ i \neq j, \ \gamma \in \mathbb{R}; \tag{3.62}$$

then, being $\mathrm{tr}\boldsymbol{\varepsilon} = 0$, we get

$$\begin{aligned} U &= \frac{1}{2}\boldsymbol{\sigma} \cdot \boldsymbol{\varepsilon} = \frac{1}{2}(2\mu\ \boldsymbol{\varepsilon} + \lambda\ \mathrm{tr}\boldsymbol{\varepsilon}\ \mathbf{I}) \cdot \boldsymbol{\varepsilon} = \mu\ \boldsymbol{\varepsilon} \cdot \boldsymbol{\varepsilon} \\ &= \gamma^2\mu(\mathbf{e}_i \otimes \mathbf{e}_j + \mathbf{e}_j \otimes \mathbf{e}_i) \cdot (\mathbf{e}_i \otimes \mathbf{e}_j + \mathbf{e}_j \otimes \mathbf{e}_i) = 2\gamma^2\mu, \end{aligned} \tag{3.63}$$

that can be positive $\iff$

$$\mu > 0. \tag{3.64}$$

The first case corresponds to a change of volume but not of shape, the second to a change of shape but not of volume. Eqs. (3.61) and (3.64) are the only two bounds that concern the Lamé's constants. Because of eqs. (3.49), (3.35), (3.53) and (3.54), these bounds correspond to pose

$$G > 0, \quad \kappa > 0, \tag{3.65}$$

$$\mathbb{C}_{1111} + 2\mathbb{C}_{1122} > 0, \quad \mathbb{C}_{1111} - \mathbb{C}_{1122} > 0, \tag{3.66}$$

and

$$E > 0, \quad -1 < \nu < \frac{1}{2}. \tag{3.67}$$

Rather surprisingly, the bounds on E and ν are three in place of two.

To remark that materials with $\nu < 0$ are theoretically possible: to a tension corresponds a transversal dilatation and to a compression, a contraction. It can be shown that these are the only necessary conditions for U being a positive definite quadratic form for the case of an isotropic body.

The upper bound $\nu = 1/2$ has a special interest: in fact,

$$\lim_{\nu \to \frac{1}{2}} \kappa = \lim_{\nu \to \frac{1}{2}} \frac{E}{3(1-2\nu)} = \infty; \tag{3.68}$$

So, such materials have an infinite volume stiffness, i.e. they oppose an infinite stiffness to change their volume: they are incompressible materials. In fact, for a spherical stress state we have seen that

$$\delta v = \mathrm{tr}\boldsymbol{\varepsilon} = \frac{p}{\kappa} \;\Rightarrow\; \lim_{\kappa \to \infty} \delta v = 0. \tag{3.69}$$

This is actually true for any stress state, not only for the spherical ones; to prove this, we put $\nu = 1/2$ in the inverse Lamé's equations:

$$\nu = \frac{1}{2} \;\rightarrow\; \boldsymbol{\varepsilon} = \frac{3}{2E}\boldsymbol{\sigma} - \frac{1}{2E}\mathrm{tr}\boldsymbol{\sigma}\,\mathbf{I} \;\Rightarrow\; \delta v = \mathrm{tr}\boldsymbol{\varepsilon} = 0. \tag{3.70}$$

3.7 The equations of Navier

The equilibrium equations

$$\mathrm{div}\boldsymbol{\sigma} + \mathbf{b} = \mathbf{o} \tag{3.71}$$

can be written as functions of $\mathbf{u}$, using the Lamé's equations and the expression of $\boldsymbol{\varepsilon} = \boldsymbol{\varepsilon}(\mathbf{u})$, eq. (1.26)[7]:

$$\mathrm{div}\boldsymbol{\sigma} = \mathrm{div}(2\mu\,\boldsymbol{\varepsilon} + \lambda\,\mathrm{tr}\boldsymbol{\varepsilon}\,\mathbf{I}) = 2\mu\,\mathrm{div}\boldsymbol{\varepsilon} + \lambda\,\mathrm{div}(\mathrm{tr}\boldsymbol{\varepsilon}\,\mathbf{I}) = 2\mu\,\mathrm{div}\boldsymbol{\varepsilon} + \lambda\nabla(\mathrm{tr}\boldsymbol{\varepsilon}). \tag{3.72}$$

[7]The following general result is used: $\mathrm{div}(\varphi\,\mathbf{S}) = \varphi\,\mathrm{div}\mathbf{S} + \mathbf{S}\nabla\varphi \;\; \forall\varphi \in \mathbb{R}$ and $\forall\mathbf{S} \in Lin(\mathcal{V})$.

Now, $\boldsymbol{\varepsilon}$ must be written as function of $\mathbf{u}$,

$$\boldsymbol{\varepsilon} = \frac{\nabla\mathbf{u} + \nabla^\top\mathbf{u}}{2} \tag{3.73}$$

and considering that

$$\begin{aligned} &\mathrm{div}\nabla\mathbf{v} = \Delta\mathbf{v}, \\ &\mathrm{div}(\nabla^\top\mathbf{v}) = \nabla\mathrm{div}\mathbf{v}, \end{aligned} \qquad \forall\mathbf{v} \in \mathcal{V}, \tag{3.74}$$

and that

$$\mathrm{tr}\boldsymbol{\varepsilon} = \mathrm{div}\mathbf{u} \tag{3.75}$$

we obtain

$$\mathrm{div}\boldsymbol{\sigma} = \mu\Delta\mathbf{u} + (\lambda + \mu)\nabla\mathrm{div}\mathbf{u}. \tag{3.76}$$

Finally, the equilibrium equations become

$$\mu\Delta\mathbf{u} + (\lambda + \mu)\nabla\mathrm{div}\mathbf{u} + \mathbf{b} = \mathbf{o}, \tag{3.77}$$

or by components

$$\mu\ u_{i,jj} + (\lambda + \mu)u_{k,ki} + b_i = 0, \quad i = 1, 2, 3. \tag{3.78}$$

These are the *Navier's equations*, expressing equilibrium as function of the displacement $\mathbf{u}$.

3.8 The equations of Beltrami-Michell

It is possible, and useful, to write the compatibility equations of Saint Venant-Beltrami, eq. (1.68),

$$\varepsilon_{ij,kl} + \varepsilon_{kl,ij} - \varepsilon_{ik,jl} - \varepsilon_{jl,ik} = 0 \tag{3.79}$$

in terms of stresses and forces, using the inverse Lamé's equations:

$$\varepsilon_{ij} = \frac{1+\nu}{E}\sigma_{ij} - \frac{\nu}{E}\delta_{ij}\Theta, \tag{3.80}$$

where

$$\Theta := \mathrm{tr}\boldsymbol{\sigma}. \tag{3.81}$$

Injecting eq.(3.80) into eq.(3.79) we have

$$\sigma_{ij,kl} + \sigma_{kl,ij} - \sigma_{ik,jl} - \sigma_{jl,ik} = \frac{\nu}{1+\nu}(\delta_{ij}\Theta_{,kl} + \delta_{kl}\Theta_{,ij} - \delta_{ik}\Theta_{,jl} - \delta_{jl}\Theta_{,ik}). \tag{3.82}$$

Let us pose $l = k$ in eq.(3.82); then, we get

$$\sigma_{ij,kk} + \sigma_{kk,ij} - \sigma_{ik,jk} - \sigma_{jk,ik} = \frac{\nu}{1+\nu}(\delta_{ij}\Theta_{,kk} + \delta_{kk}\Theta_{,ij} - \delta_{ik}\Theta_{,jk} - \delta_{jk}\Theta_{,ik}), \tag{3.83}$$

or, better,

$$\Delta\sigma_{ij} + \Theta_{,ij} - \sigma_{ik,jk} - \sigma_{jk,ik} = \frac{\nu}{1+\nu}(\delta_{ij}\Delta\Theta + 3\Theta_{,ij} - 2\Theta_{,ij}). \tag{3.84}$$

By the equilibrium equation we get

$$\sigma_{pq,q} + b_p = 0 \quad \rightarrow \quad \sigma_{pq,qr} = -b_{p,r}, \tag{3.85}$$

and hence

$$\Delta\sigma_{ij} + \frac{1}{1+\nu}\Theta_{,ij} - \frac{\nu}{1+\nu}\delta_{ij}\Delta\Theta = -(b_{i,j} + b_{j,i}). \tag{3.86}$$

This is a set of 9 equations, but only 6 are independent, for the symmetries of i and j, so this linear combination of the 6 original equations is equivalent to these last.

We need now to express Θ in terms of the $b_{i,j}$. To this end, we pose $k = i$ and $l = j$ in eq.(3.82) and sum up with respect to the repeated indexes, to get

$$2\sigma_{ij,ij} - \sigma_{ii,jj} - \sigma_{jj,ii} = \frac{\nu}{1+\nu}(2\delta_{ij}\Theta_{,ij} - \delta_{ii}\Theta_{,jj} - \delta_{jj}\Theta_{,ii}); \tag{3.87}$$

because

$$\sigma_{ii} = \sigma_{jj} = \Theta, \quad \delta_{ij}\Theta_{,ij} = \Theta_{,ii} = \Delta\Theta, \quad \delta_{ii}\Theta_{,jj} = \delta_{jj}\Theta_{,ii} = 3\Delta\Theta, \tag{3.88}$$

we obtain

$$\sigma_{ij,ij} = \frac{1-\nu}{1+\nu}\Delta\Theta. \tag{3.89}$$

But

$$\sigma_{ij,ij} = -b_{j,j} = -\mathrm{div}\mathbf{b}, \tag{3.90}$$

so

$$\Delta\Theta = -\frac{1+\nu}{1-\nu}\mathrm{div}\mathbf{b}, \tag{3.91}$$

and finally we get

$$\Delta\sigma_{ij} + \frac{1}{1+\nu}\Theta_{,ij} = -\frac{\nu}{1-\nu}\delta_{ij}\mathrm{div}\mathbf{b} - (b_{i,j} + b_{j,i}). \tag{3.92}$$

These are the *Beltrami-Michell equations* (1900); they are the necessary conditions of compatibility written in terms of stresses and forces.

Let us now consider the special case of constant body forces:

$$\mathbf{b} = const. \quad \rightarrow \quad \mathrm{div}\mathbf{b} = 0, \quad b_{i,j} = b_{j,i} = 0 \quad \forall i, j, \tag{3.93}$$

so that eq.(3.92) becomes

$$\Delta\sigma_{ij} + \frac{1}{1+\nu}\Theta_{,ij} = 0, \tag{3.94}$$

known as *equations of Beltrami* (1892). For eq. (3.91) we have also

$$\Delta\Theta = 0, \tag{3.95}$$

i.e., Θ is a harmonic function; because

$$\mathrm{tr}\boldsymbol{\varepsilon} = \frac{1}{2\mu + 3\lambda}\mathrm{tr}\boldsymbol{\sigma}, \tag{3.96}$$

it is also

$$\Delta(\mathrm{tr}\boldsymbol{\varepsilon}) = 0, \tag{3.97}$$

i.e., also the trace of $\boldsymbol{\varepsilon}$ is a harmonic function. Finally, from the equations of Beltrami, we get also

$$\Delta^2 \sigma_{ij} = 0 \quad \forall i, j, \tag{3.98}$$

and because $\boldsymbol{\varepsilon}$ is a linear function of $\boldsymbol{\sigma}$,

$$\Delta^2 \varepsilon_{ij} = 0 \quad \forall i, j, \tag{3.99}$$

in other words, the components of $\boldsymbol{\sigma}$ and $\boldsymbol{\varepsilon}$ are biharmonic functions.

3.9 Superposition of the effects

In classical elasticity, all the sources of nonlinearity vanish: the relation between stress and strain, the Lamé's equations for isotropic bodies, or more generally the Hooke's law, are linear; the nonlinearity due to the effects of the displacements on the forces, that produce the displacements, does not exist, because of the assumption of small perturbations. The equilibrium equations, for instance in the form of the Navier's equations, are linear in the u_i. Hence, as for any other linear problem, if $\mathbf{f}^i,\ i = 1, ..., n$ are n systems of forces acting upon the same elastic body Ω, with the same boundary conditions on $\partial\Omega_u$ and $\{\mathbf{u}^i, \boldsymbol{\varepsilon}^i, \boldsymbol{\sigma}^i\}$ are the corresponding elastic solutions, then the solution to the new system of forces $\mathbf{f}^0$ obtained as a linear combination of the previous forces,

$$\mathbf{f}^0 = \alpha_i\ \mathbf{f}^i,\ i = 1, ..., n, \tag{3.100}$$

is the linear combination of the previous solutions with the same coefficients α_i:

$$\{\mathbf{u}^0, \boldsymbol{\varepsilon}^0, \boldsymbol{\sigma}^0\} = \alpha_i \{\mathbf{u}^i, \boldsymbol{\varepsilon}^i, \boldsymbol{\sigma}^i\}\ i = 1, ..., n. \tag{3.101}$$

This is the *Principle of Superposition of the Effects*, that has several applications in the analysis of elastic structures.

It has to be remarked, however, that this principle cannot be applied to the quantities that are not linear, which is the case of the elastic energy. Just as an example, consider the case of $n = 2$; then

$$\begin{aligned} U &= \frac{1}{2}(\alpha^1 \boldsymbol{\sigma}^1 + \alpha^2 \boldsymbol{\sigma}^2) \cdot (\alpha^1 \boldsymbol{\varepsilon}^1 + \alpha^2 \boldsymbol{\varepsilon}^2) \\ &= \frac{1}{2}[(\alpha^1)^2 \boldsymbol{\sigma}^1 \cdot \boldsymbol{\varepsilon}^1 + (\alpha^2)^2 \boldsymbol{\sigma}^2 \cdot \boldsymbol{\varepsilon}^2 + \alpha^1 \alpha^2 (\boldsymbol{\sigma}^1 \cdot \boldsymbol{\varepsilon}^2 + \boldsymbol{\sigma}^2 \cdot \boldsymbol{\varepsilon}^1)] \\ &= (\alpha^1)^2 U^1 + (\alpha^2)^2 U^2 + \alpha^1 \alpha^2 (\boldsymbol{\sigma}^1 \cdot \boldsymbol{\varepsilon}^2 + \boldsymbol{\sigma}^2 \cdot \boldsymbol{\varepsilon}^1) \neq \alpha^1 U^1 + \alpha^2 U^2. \end{aligned} \tag{3.102}$$

3.10 The Principle of Virtual Displacements

Be $\delta\mathbf{u}$ a *compatible virtual displacement field* on Ω; this means that

i. $\delta\mathbf{u}$ is an infinitesimal, regular, time independent field of displacement;

ii. it satisfies to the boundary conditions on $\partial\Omega_u : \delta\mathbf{u}|_{\partial\Omega_u} = \mathbf{o}$;

iii. it satisfies to the geometric relations with $\boldsymbol{\varepsilon}$: $\delta\mathbf{u}$ defines a virtual strain field $\delta\boldsymbol{\varepsilon}$ as

$$\delta\boldsymbol{\varepsilon} = \frac{\nabla\delta\mathbf{u} + \nabla^\top\delta\mathbf{u}}{2}. \tag{3.103}$$

We further assume that the forces are equilibrated with the stresses, i.e. that the body is in equilibrium:

$$\mathrm{div}\boldsymbol{\sigma} + \mathbf{b} = \mathbf{o}. \tag{3.104}$$

Then, the work done by the surface tractions $\mathbf{t}$ applied to Ω on $\partial\Omega_t$ for the virtual displacement $\delta\mathbf{u}$ is, for the theorem of Cauchy,

$$\int_{\partial\Omega} \mathbf{t}\cdot\delta\mathbf{u}\ ds = \int_{\partial\Omega} \boldsymbol{\sigma}\mathbf{n}\cdot\delta\mathbf{u}\ ds; \tag{3.105}$$

so, using successively the theorem of Gauss, the identity

$$\mathrm{div}(\mathbf{S}^\top\mathbf{v}) = \mathbf{S}\cdot\nabla\mathbf{v} + \mathbf{v}\cdot\mathrm{div}\mathbf{S} \quad \forall\mathbf{v}\in\mathcal{V} \text{ and } \forall\mathbf{S}\in Lin(\mathcal{V}), \tag{3.106}$$

the equilibrium equation (3.104) and the fact that, see Note 4 of Chapter 2,

$$\boldsymbol{\sigma}\cdot\boldsymbol{\varepsilon} = \boldsymbol{\sigma}\cdot\nabla\mathbf{u}, \tag{3.107}$$

we get

$$\begin{aligned}
\int_{\partial\Omega} \mathbf{t}\cdot\delta\mathbf{u}\ ds &= \int_{\partial\Omega} \boldsymbol{\sigma}\mathbf{n}\cdot\delta\mathbf{u}\ ds = \int_{\partial\Omega} \boldsymbol{\sigma}^\top\delta\mathbf{u}\cdot\mathbf{n}\ ds \\
&= \int_\Omega \mathrm{div}(\boldsymbol{\sigma}^\top\delta\mathbf{u})d\omega = \int_\Omega (\boldsymbol{\sigma}\cdot\nabla\delta\mathbf{u} + \delta\mathbf{u}\cdot\mathrm{div}\boldsymbol{\sigma})d\omega \\
&= \int_\Omega \boldsymbol{\sigma}\cdot\nabla\delta\mathbf{u}\ d\omega - \int_\Omega \mathbf{b}\cdot\delta\mathbf{u}\ d\omega \\
&= \int_\Omega \boldsymbol{\sigma}\cdot\delta\boldsymbol{\varepsilon}\ d\omega - \int_\Omega \mathbf{b}\cdot\delta\mathbf{u}\ d\omega,
\end{aligned} \tag{3.108}$$

and finally

$$\int_\Omega \boldsymbol{\sigma}\cdot\delta\boldsymbol{\varepsilon}\ d\omega = \int_\Omega \mathbf{b}\cdot\delta\mathbf{u}\ d\omega + \int_{\partial\Omega} \mathbf{t}\cdot\delta\mathbf{u}\ ds \quad \forall \text{ compatible } \delta\mathbf{u}. \tag{3.109}$$

This is the *Principle of Virtual Displacements* (PVD) for deformable bodies, not exclusively the elastic ones, because we have not introduced any constitutive law, so its validity is quite general. As the same proof of the theorem shows, it is completely equivalent to the equilibrium equations; for these reasons, this theorem is often called a principle, like we do.

The PVD states that, at the equilibrium, the virtual work of the internal forces, the left-hand side term, equals the virtual work of the external forces, the right-hand side term not only for the real displacement field, but more generally *for any compatible virtual displacement field*, i.e. for any infinitesimal displacement field that satisfies to the kinematical boundary conditions and that is linked to the virtual strain field by eq. (3.103).

The PVD is hence the principle of equilibrium and it has several and remarkable applications, like for the resolution of hyperstatic structures, see Chapter 5, or in the proof of the theorems of the next Section.

3.11 Elasticity theorems

The theorems in this Section have a great importance, as well as from the theoretical point of view and for their numerous applications.

3.11.1 The Theorem of Clapeyron

If we apply the PVD not to a generic displacement field but to the real one, that produced, at the equilibrium, by the applied forces and that is, of course, compatible, i.e. if $\delta\mathbf{u} = \mathbf{u}$ and $\delta\boldsymbol{\varepsilon} = \boldsymbol{\varepsilon}$, then we have

$$\int_\Omega \boldsymbol{\sigma} \cdot \boldsymbol{\varepsilon}\ d\omega = \int_\Omega \mathbf{b} \cdot \mathbf{u}\ d\omega + \int_{\partial\Omega} \mathbf{t} \cdot \mathbf{u}\ ds. \tag{3.110}$$

The left-hand side is twice the elastic energy stored by Ω, while the right-hand side is the actual work of external forces for the displacement field that they produce at the equilibrium. This proves the *Clapeyron's theorem (1833): at the equilibrium, the work done by the external forces for their final displacements is twice the elastic energy stored in the body during deformation.*

To remark that, unlike the PVD, this theorem is valid only for linearly elastic materials (but not necessarily isotropic nor homogeneous), because we interpret the term $\boldsymbol{\sigma} \cdot \boldsymbol{\varepsilon}$ as the double of the elastic energy, which is correct only for linear elasticity.

3.11.2 The Theorem of Betti

Let us suppose that the same body Ω is subjected first to a system of forces $\mathbf{t}^1$, $\mathbf{b}^1$ that at the equilibrium give the displacement and strain fields $\mathbf{u}^1$ and $\boldsymbol{\varepsilon}^1$. Then, Ω is submitted to another equilibrated system of forces, $\mathbf{t}^2$, $\mathbf{b}^2$, that produce the fields $\mathbf{u}^2$ and $\boldsymbol{\varepsilon}^2$. All these displacement and strain fields, being real, are also virtual and compatible. So, we are free to combine the forces of the first system with the displacements-strains of the second one and vice-versa. For the major symmetries of $\mathbb{C}$ it is

$$\mathbb{C}_{ijkl}\varepsilon^1_{ij}\varepsilon^2_{kl} = \mathbb{C}_{klij}\varepsilon^1_{ij}\varepsilon^2_{kl} = \mathbb{C}_{klij}\varepsilon^1_{kl}\varepsilon^2_{ij} = \mathbb{C}_{ijkl}\varepsilon^2_{ij}\varepsilon^1_{kl}, \tag{3.111}$$

in other words

$$\boldsymbol{\varepsilon}^1 \cdot \mathbb{C}\boldsymbol{\varepsilon}^2 = \boldsymbol{\varepsilon}^2 \cdot \mathbb{C}\boldsymbol{\varepsilon}^1, \tag{3.112}$$

so that applying the PVD we get

$$\begin{aligned} &\int_\Omega \mathbf{b}^1 \cdot \mathbf{u}^2\ d\omega + \int_{\partial\Omega} \mathbf{t}^1 \cdot \mathbf{u}^2\ ds = \int_\Omega \boldsymbol{\sigma}^1 \cdot \boldsymbol{\varepsilon}^2\ d\omega = \int_\Omega \boldsymbol{\varepsilon}^2 \cdot \mathbb{C}\boldsymbol{\varepsilon}^1\ d\omega = \\ &\int_\Omega \boldsymbol{\varepsilon}^1 \cdot \mathbb{C}\boldsymbol{\varepsilon}^2\ d\omega = \int_\Omega \boldsymbol{\sigma}^2 \cdot \boldsymbol{\varepsilon}^1\ d\omega = \int_\Omega \mathbf{b}^2 \cdot \mathbf{u}^1\ d\omega + \int_{\partial\Omega} \mathbf{t}^2 \cdot \mathbf{u}^1\ ds. \end{aligned} \tag{3.113}$$

This is the *Betti's reciprocal theorem (1879): the external work done on an elastic body by the forces of the first system for the displacements of the second one equals that done by the forces of the second system for the displacements of the first one, when both the systems are equilibrated.* This theorem has several applications, namely in the theory of the lines of influence.

3.11.3 The Theorem of Kirchhoff

A further result concerns the general solution of the elastic problem: we know that the elastic problem is described by 15 unknowns and ruled by 15 equations. But, actually, does this problem have at least one solution? And if yes, is this solution the unique possible one? We leave apart the first question, because in general too complicate (in our problems, for each case we will give a constructive response) and let us consider the question of the uniqueness of the solution.

We proceed assuming that there are two possible solutions to the same elastic problem, which means same body Ω, boundary conditions and applied forces: $\mathbf{u}^1, \boldsymbol{\varepsilon}^1, \boldsymbol{\sigma}^1$ and $\mathbf{u}^2, \boldsymbol{\varepsilon}^2, \boldsymbol{\sigma}^2$. Then, we consider the difference of the two solutions:

$$\mathbf{u} = \mathbf{u}^1 - \mathbf{u}^2, \quad \boldsymbol{\varepsilon} = \boldsymbol{\varepsilon}^1 - \boldsymbol{\varepsilon}^2, \quad \boldsymbol{\sigma} = \boldsymbol{\sigma}^1 - \boldsymbol{\sigma}^2. \tag{3.114}$$

Of course, these fields correspond to the following body forces and boundary conditions: $\mathbf{b} = \mathbf{o}$ over Ω, $\mathbf{t} = \mathbf{o}$ on $\partial\Omega_t$, $\mathbf{u} = \mathbf{o}$ on $\partial\Omega_u$. So, by the PVD,

$$\int_\Omega \mathbf{b} \cdot \mathbf{u} \, d\omega + \int_{\partial\Omega} \mathbf{t} \cdot \mathbf{u} \, ds = 0 = \int_\Omega \boldsymbol{\sigma} \cdot \boldsymbol{\varepsilon} \, d\omega = \int_\Omega \boldsymbol{\varepsilon} \cdot \mathbb{C}\boldsymbol{\varepsilon} \, d\omega. \tag{3.115}$$

Because $\mathbb{C}$ is positive definite, this can happen $\iff$ $\boldsymbol{\varepsilon} = \mathbf{O} \Rightarrow \boldsymbol{\varepsilon}^1 = \boldsymbol{\varepsilon}^2$; moreover, $\boldsymbol{\varepsilon} = \mathbf{O} \Rightarrow \boldsymbol{\sigma} = \mathbb{C}\boldsymbol{\varepsilon} = \mathbf{O}$ too, which implies $\boldsymbol{\sigma}^1 = \boldsymbol{\sigma}^2$. Finally, if $\boldsymbol{\varepsilon}^1 = \boldsymbol{\varepsilon}^2$, then $\mathbf{u}^1 = \mathbf{u}^2 + \mathbf{w}$, with $\mathbf{w}$ an infinitesimal rigid displacement, absolutely inessential.

This result is the *uniqueness theorem of Kirchhoff (1859): the elastic solution is unique.* The very importance of this theorem is that it gives a constructive way for finding a solution to an elastic problem; if a solution is found in some way, then it is *the* solution, because of the Kirchhoff's theorem.

3.11.4 The Theorem of Castigliano

Let us consider an elastic body Ω, with given constraint conditions on $\partial\Omega_u$ and acted upon by some forces; among these forces, we consider a concentrated force $\mathbf{f}_p$ applied in $p \in \Omega$. We imagine to give a small increment $\delta\mathbf{f}_p$ to $\mathbf{f}_p$. Correspondingly, the elastic energy of the body changes, for the contribution of :

- the work done by the other external forces;
- the work done by $\delta\mathbf{f}_p$.

The second contribution is negligible with respect to the first one, because it is of the order $o(\delta\mathbf{f}_p)^2$; the first contribution, for the Betti's theorem, is equal to the work done by $\delta\mathbf{f}_p$ during the application of the remaining forces.

So, if $\mathbf{u}_p$ is the displacement that p has in the direction of $\mathbf{f}_p$ when Ω is deformed by the whole system of applied forces, the increment of the elastic energy due to the increment $\delta\mathbf{f}_p$ will be

$$\delta\mathbf{f}_p \cdot \mathbf{u}_p = \delta f_p u_p, \tag{3.116}$$

and the same increment can be written as

$$\frac{\partial U}{\partial f_p}\delta f_p, \tag{3.117}$$

which implies

$$u_p = \frac{\partial U}{\partial f_p}. \tag{3.118}$$

This is the *Theorem of Castigliano (1875): the displacement of the point of application of a concentrated force in the direction of the same force is equal to the partial derivative of the elastic energy with respect to the same force.*

This theorem has also a dual form, that can be proved in a similar way:

$$f_p = \frac{\partial U}{\partial u_p}: \tag{3.119}$$

the component of a force in the direction of the displacement of its point of application is equal to the partial derivative of the elastic energy with respect to the same displacement.

The theorem of Castigliano is used for the calculation of elastic displacements and in a method for the resolution of hyperstatic structures.

3.11.5 The Theorem of Minimum Total Potential Energy

We define as *kinematically admissible* any state $\{\mathbf{u}^*, \boldsymbol{\varepsilon}^*, \boldsymbol{\sigma}^*\}$ for which

$$\boldsymbol{\varepsilon}^* = \frac{\nabla\mathbf{u}^* + \nabla^\top\mathbf{u}^*}{2},\ \mathbf{u}^* = \mathbf{u} \text{ on } \partial\Omega_u,\ \boldsymbol{\sigma}^* = \mathbb{C}\boldsymbol{\varepsilon}^*. \tag{3.120}$$

To remark that such a state is *not necessarily equilibrated*, because we do not require that $\boldsymbol{\sigma}^*$ satisfy to the equilibrium equations with the applied forces, but only that it is related to the strain field by the Hooke's law.

Then, the *total potential energy* $\mathcal{E}$ of an elastic body Ω, subjected to body forces $\mathbf{b}$ and tractions $\mathbf{t}$ on $\partial\Omega_t$ is defined on the set of kinematically admissible states as

$$\mathcal{E} = \frac{1}{2}\int_\Omega \boldsymbol{\sigma}^* \cdot \boldsymbol{\varepsilon}^*\ d\omega - \int_\Omega \mathbf{b}\cdot\mathbf{u}^*\ d\omega - \int_{\partial\Omega} \mathbf{t}\cdot\mathbf{u}^*\ ds. \tag{3.121}$$

$\mathcal{E}$ is the difference between the elastic energy of Ω and the work of the external forces.

Be now $\{\mathbf{u}', \boldsymbol{\varepsilon}', \boldsymbol{\sigma}'\}$ the *real*, hence equilibrated, solution of the equilibrium problem, and put

$$\overline{\mathbf{u}} = \mathbf{u}^* - \mathbf{u}',\ \overline{\boldsymbol{\varepsilon}} = \boldsymbol{\varepsilon}^* - \boldsymbol{\varepsilon}'. \tag{3.122}$$

So, because the starred system is compatible and $\{\mathbf{u}', \boldsymbol{\varepsilon}', \boldsymbol{\sigma}'\}$ is the solution,

$$\overline{\boldsymbol{\varepsilon}} = \frac{\nabla\overline{\mathbf{u}} + \nabla^\top\overline{\mathbf{u}}}{2}, \quad \overline{\mathbf{u}} = \mathbf{o} \text{ on } \partial\Omega_u. \tag{3.123}$$

$\mathbb{C}$ is symmetric, i.e. it has the major symmetries, which implies

$$\begin{aligned}\boldsymbol{\varepsilon}^* \cdot \mathbb{C}\boldsymbol{\varepsilon}^* &= (\boldsymbol{\varepsilon}' + \overline{\boldsymbol{\varepsilon}}) \cdot \mathbb{C}(\boldsymbol{\varepsilon}' + \overline{\boldsymbol{\varepsilon}}) = \boldsymbol{\varepsilon}' \cdot \mathbb{C}\boldsymbol{\varepsilon}' + \overline{\boldsymbol{\varepsilon}} \cdot \mathbb{C}\overline{\boldsymbol{\varepsilon}} + \boldsymbol{\varepsilon}' \cdot \mathbb{C}\overline{\boldsymbol{\varepsilon}} + \overline{\boldsymbol{\varepsilon}} \cdot \mathbb{C}\boldsymbol{\varepsilon}' \\ &= \boldsymbol{\varepsilon}' \cdot \mathbb{C}\boldsymbol{\varepsilon}' + \overline{\boldsymbol{\varepsilon}} \cdot \mathbb{C}\overline{\boldsymbol{\varepsilon}} + 2\overline{\boldsymbol{\varepsilon}} \cdot \mathbb{C}\boldsymbol{\varepsilon}'.\end{aligned} \tag{3.124}$$

So,

$$\frac{1}{2}\int_\Omega \boldsymbol{\sigma}^* \cdot \boldsymbol{\varepsilon}^* \, d\omega - \frac{1}{2}\int_\Omega \boldsymbol{\sigma}' \cdot \boldsymbol{\varepsilon}' \, d\omega = \frac{1}{2}\int_\Omega \overline{\boldsymbol{\sigma}} \cdot \overline{\boldsymbol{\varepsilon}} \, d\omega + \int_\Omega \boldsymbol{\sigma}' \cdot \overline{\boldsymbol{\varepsilon}} \, d\omega, \tag{3.125}$$

where of course $\boldsymbol{\sigma}^* = \mathbb{C}\boldsymbol{\varepsilon}^*, \overline{\boldsymbol{\sigma}} = \mathbb{C}\overline{\boldsymbol{\varepsilon}}, \boldsymbol{\sigma}' = \mathbb{C}\boldsymbol{\varepsilon}'$.

Because $\{\mathbf{u}', \boldsymbol{\varepsilon}', \boldsymbol{\sigma}'\}$ is a solution, then by the PVD and for $\overline{\mathbf{u}} = \mathbf{o}$ on $\partial\Omega_u$, we have

$$\int_\Omega \boldsymbol{\sigma}' \cdot \overline{\boldsymbol{\varepsilon}} \, d\omega = \int_\Omega \mathbf{b} \cdot \overline{\mathbf{u}} \, d\omega + \int_{\partial\Omega} \mathbf{t} \cdot \overline{\mathbf{u}} \, ds. \tag{3.126}$$

So, for the last two equations, we have

$$\mathcal{E}^* - \mathcal{E}' = \frac{1}{2}\int_\Omega \overline{\boldsymbol{\sigma}} \cdot \overline{\boldsymbol{\varepsilon}} \, d\omega = \frac{1}{2}\int_\Omega \overline{\boldsymbol{\varepsilon}} \cdot \mathbb{C}\overline{\boldsymbol{\varepsilon}} \, d\omega, \tag{3.127}$$

where $\mathcal{E}^*$ is the total potential energy of the starred, only kinematically admissible, state, while $\mathcal{E}'$ is the total potential energy corresponding to the real, also equilibrated, solution (a solution is of course kinematically admissible). Because $\mathbb{C}$ is positive definite, $\overline{\boldsymbol{\varepsilon}} \cdot \mathbb{C}\overline{\boldsymbol{\varepsilon}} \geq 0 \; \forall \overline{\boldsymbol{\varepsilon}}$, and it is null $\iff \overline{\boldsymbol{\varepsilon}} = \mathbf{O}$, i.e. when $\boldsymbol{\varepsilon}^* = \boldsymbol{\varepsilon}'$, so finally we get

$$\mathcal{E}' \leq \mathcal{E}^*, \tag{3.128}$$

with the equality that holds only when $\mathbf{u}^* = \mathbf{u}' + \mathbf{w}, \boldsymbol{\varepsilon}^* = \boldsymbol{\varepsilon}', \boldsymbol{\sigma}^* = \boldsymbol{\sigma}'$, i.e. when the starred system coincide, left apart an inessential infinitesimal rigid displacement $\mathbf{w}$, with the real solution.

This is the *Principle of Minimum Total Potential Energy: among all the possible values that the total potential energy $\mathcal{E}$ can take in correspondence of given kinematically admissible states, the minimum value is assumed for the real, hence also equilibrated, state.* This theoretical result is important also for practical purposes, because it offers a way for the search of the solution: the (unique) solution to a problem of linear elasticity is that corresponding to the kinematically admissible state that minimizes $\mathcal{E}$; then, that kinematically state, and only that one, will be also equilibrated.

3.11.6 The Theorem of Minimum Complementary Energy

We define as *statically admissible* any stress field $\boldsymbol{\sigma}^o$ that satisfies the equilibrium and boundary conditions:

$$\mathrm{div}\boldsymbol{\sigma}^o + \mathbf{b} = \mathbf{o} \;\text{ in } \Omega, \quad \boldsymbol{\sigma}^o\mathbf{n} = \mathbf{t}_0 \;\text{ on } \partial\Omega_t. \tag{3.129}$$

Then, the *complementary energy* defined on the set of statically admissible stress fields is

$$\mathcal{C} = \frac{1}{2}\int_\Omega \boldsymbol{\sigma}^o \cdot \boldsymbol{\varepsilon}^o \, d\omega - \int_{\partial\Omega_u} \boldsymbol{\sigma}^o\mathbf{n} \cdot \mathbf{u}_0 \, ds, \tag{3.130}$$

with

$$\boldsymbol{\varepsilon}^o = \mathbb{S}\boldsymbol{\sigma}^o. \tag{3.131}$$

$\mathcal{C}$ is the difference between the elastic energy of Ω and the work of the forces on the boundary uniquely.

Then,

$$\begin{aligned}\mathcal{E} + \mathcal{C} &= \frac{1}{2}\int_\Omega \boldsymbol{\sigma}\cdot\boldsymbol{\varepsilon}\ d\omega - \int_\Omega \mathbf{b}\cdot\mathbf{u}\ d\omega - \int_{\partial\Omega_t} \mathbf{t}_0\cdot\mathbf{u}\ ds \\ &+ \frac{1}{2}\int_\Omega \boldsymbol{\sigma}\cdot\boldsymbol{\varepsilon}\ d\omega - \int_{\partial\Omega_u} \mathbf{t}\cdot\mathbf{u}_0\ ds \\ &= \int_\Omega \boldsymbol{\sigma}\cdot\boldsymbol{\varepsilon}\ d\omega - \int_\Omega \mathbf{b}\cdot\mathbf{u}\ d\omega - \int_{\partial\Omega} \mathbf{t}\cdot\mathbf{u}\ ds = 0,\end{aligned} \tag{3.132}$$

for the theorem of Clapeyron. This motivates the name of *complementary* energy.

Now, be $\{\widetilde{\mathbf{u}}, \widetilde{\boldsymbol{\varepsilon}}, \widetilde{\boldsymbol{\sigma}}\}$ the real solution to the equilibrium problem for Ω, with of course $\widetilde{\boldsymbol{\sigma}} = \mathbb{C}\widetilde{\boldsymbol{\varepsilon}}$; this solution is equilibrated and kinematically admissible. Let us introduce the difference of the stress states

$$\boldsymbol{\sigma} = \boldsymbol{\sigma}^o - \widetilde{\boldsymbol{\sigma}} \ \Rightarrow\ \mathrm{div}\boldsymbol{\sigma} = \mathbf{o}\ \ \Omega,\ \boldsymbol{\sigma}\mathbf{n} = \mathbf{o} \text{ on } \partial\Omega_t. \tag{3.133}$$

Then, using the same procedure exposed in eq. (3.124), we obtain

$$\frac{1}{2}\int_\Omega \boldsymbol{\sigma}^o\cdot\boldsymbol{\varepsilon}^o\ d\omega - \frac{1}{2}\int_\Omega \widetilde{\boldsymbol{\sigma}}\cdot\widetilde{\boldsymbol{\varepsilon}}\ d\omega = \frac{1}{2}\int_\Omega \boldsymbol{\sigma}\cdot\boldsymbol{\varepsilon}\ d\omega + \int_\Omega \boldsymbol{\sigma}\cdot\widetilde{\boldsymbol{\varepsilon}}\ d\omega. \tag{3.134}$$

Because of eq. (3.133), we get[8]

$$\int_\Omega \boldsymbol{\sigma}\cdot\widetilde{\boldsymbol{\varepsilon}}\ d\omega = \int_{\partial\Omega_u} \boldsymbol{\sigma}\mathbf{n}\cdot\mathbf{u}_0\ ds = \int_{\partial\Omega_u} \boldsymbol{\sigma}^o\mathbf{n}\cdot\mathbf{u}_0\ ds - \int_{\partial\Omega_u} \widetilde{\boldsymbol{\sigma}}\mathbf{n}\cdot\mathbf{u}_0\ ds, \tag{3.135}$$

Injecting this result into eq. (3.134) gives

$$\mathcal{C}^o - \widetilde{\mathcal{C}} = \frac{1}{2}\int_\Omega \boldsymbol{\sigma}\cdot\boldsymbol{\varepsilon}\ d\omega = \frac{1}{2}\int_\Omega \boldsymbol{\sigma}\cdot\mathbb{S}\boldsymbol{\sigma}\ d\omega, \tag{3.136}$$

with

$$\mathcal{C}^o = \frac{1}{2}\int_\Omega \boldsymbol{\sigma}^o\cdot\boldsymbol{\varepsilon}^o\ d\omega - \int_{\partial\Omega_u} \boldsymbol{\sigma}^o\mathbf{n}\cdot\mathbf{u}_0\ ds \tag{3.137}$$

the complementary energy corresponding to the statically admissible stress field (to which is not asked the kinematical admissibility of the displacement and strain fields), while

$$\widetilde{\mathcal{C}} = \frac{1}{2}\int_\Omega \widetilde{\boldsymbol{\sigma}}\cdot\widetilde{\boldsymbol{\varepsilon}}\ d\omega - \int_{\partial\Omega_u} \widetilde{\boldsymbol{\sigma}}\mathbf{n}\cdot\mathbf{u}_0\ ds \tag{3.138}$$

[8]This result is readily obtained thanks to the identity

$$\int_{\partial\Omega} \mathbf{A}\mathbf{n}\cdot\mathbf{v} = \int_\Omega \mathrm{div}\mathbf{A}\cdot\mathbf{v}\ d\omega + \int_\Omega \mathbf{A}\cdot\nabla\mathbf{v}\ d\omega,$$

which derives from the Gauss theorem for tensors, and using the result of Note 4 of Chapter 2.

is the complementary energy of the real state, which is at the same time statically and kinematically admissible.

The argument now is exactly the same used for proving the principle of minimum total potential energy: because $\mathbb{S}$ is positive definite[9] then $\boldsymbol{\sigma} \cdot \mathbb{S}\boldsymbol{\sigma} > 0 \ \forall \boldsymbol{\sigma} \neq \mathbf{o}$ and it is nulle $\iff \ \boldsymbol{\sigma} = \mathbf{o} \Rightarrow \boldsymbol{\sigma}^o = \widetilde{\boldsymbol{\sigma}}$, so finally we obtain

$$\widetilde{\mathbb{C}} \leq \mathbb{C}^o, \tag{3.139}$$

which proves the *Principle of Minimum Complementary Energy: among all the possible values that the complementary energy $\mathcal{C}$ can take for given statically admissible stress fields, the minimum value is assumed for the real, hence also kinematically admissible, solution.*

3.12 Exercises

1. Show that for linear, isotropic, elastic materials, $\boldsymbol{\sigma}$ and $\boldsymbol{\varepsilon}$ are *coaxial*, i.e. they share the same eigenvectors. What does this means, mechanically speaking? Is this true also for anisotropic materials?

2. Consider the decomposition into spherical and deviatoric parts of $\boldsymbol{\varepsilon}$ and $\boldsymbol{\sigma}$:

$$\boldsymbol{\varepsilon} = \boldsymbol{\varepsilon}_s + \boldsymbol{\varepsilon}_d, \quad \boldsymbol{\sigma} = \boldsymbol{\sigma}_s + \boldsymbol{\sigma}_d;$$

   i. show that it is

$$U = U_s + U_d, \quad \text{with} \ \ U_s = \frac{1}{2}\boldsymbol{\sigma}_s \cdot \boldsymbol{\varepsilon}_s, \ U_d = \frac{1}{2}\boldsymbol{\sigma}_d \cdot \boldsymbol{\varepsilon}_d;$$

   what does this mean, mechanically?

   ii. show that, for an isotropic material,

$$\boldsymbol{\sigma}_s = \mathbb{C}\boldsymbol{\varepsilon}_s, \quad \boldsymbol{\sigma}_d = \mathbb{C}\boldsymbol{\varepsilon}_d,$$

   and interpret it mechanically;

   iii. show that U_s depends only upon κ and U_d only upon G; why, in some sense, this was to be expected?

   iv. show that bounding the value of U_d is equivalent to bound the value of τ_{oct}, see Ex. 8, Chapt. 2.

3. Express E, ν, κ and G as functions of c_1 and c_2 and vice-versa.

4. Write the equations of Lamé with κ and G as unique elastic parameters.

[9] The positive definiteness of $\mathbb{S}$ comes from the fact that $\mathbb{S} = \mathbb{C}^{-1}$ or, mechanically, repeating *verbatim* the argument used for proving that $\mathbb{C}$ is positive definite, but now starting from the expression (3.23) of U.

5. Be $\mathbf{u}$ such that curl $\mathbf{u} = \mathbf{o}$; use the Navier's equations to show that

$$\text{div}\mathbf{u} = \frac{\beta}{\lambda + 2\mu} + const. \tag{3.140}$$

6. Using the Navier's equations show that

$$\Delta\text{div}\mathbf{u} = -\frac{1}{\lambda + 2\mu}\text{div}\mathbf{b} = -\frac{(1+\nu)(1-2\nu)}{(1-\nu)E}\text{div}\mathbf{b}, \tag{3.141}$$

   which is called the *dilatation equation.*

7. An elastic cube whose constants are E and ν is compressed by uniform tractions of value q on two opposite faces, while volume forces are negligible. Determine the volume change and the variation of the length of the cube sides.

8. Do the same exercice, but this time the cube is surrounded by an infinitely rigid material on the lateral sides.

9. A square plate is submitted to a uniform tension f on the four sides, and its elastic contants are E and ν. Find the surface variation and the displacement field $\mathbf{u}$.

10. A square plate whose elastic constants are λ and μ and with the sides parallel to the axes x_1 and x_2, is submitted to some tractions on its sides and null body forces. The resulting displacement field is

$$\mathbf{u}(x_1, x_2) = \gamma\ x_2\ \mathbf{e}_1, \quad \gamma \in \mathbb{R};$$

    i. give a graphical interpretation of $\mathbf{u}$;
    ii. determine $\boldsymbol{\varepsilon}$ and $\boldsymbol{\sigma}$;
    iii. find the surface variation;
    iv. determine the tractions on the boundary;
    v. which type of deformation is this one?

11. A circular cylinder of radius R and height L is clamped at the lower base while the upper one is turned through an angle β. The body forces and tractions on the lateral surface are null.

    i. make a conjecture on the displacement field and then calculate $\boldsymbol{\varepsilon}$ and $\boldsymbol{\sigma}$;
    ii. determine the actions to be applied to the upper base; what are the actions on the clamped base?
    iii. calculate the volume variation;
    iv. determine the stress on any cross section of the cylinder;
    v. which type of deformation is this one?

12. An isotropic body subjected to a change of temperature θ changes its volume. We assume that this volume change is isotropic and proportional to θ through a coefficient α and that it adds to the mechanical deformation, due to the applied forces.

Generalize the Lamé's equations to take into account for the deformation due to θ (this is the constitutive law for linear isotropic thermo-elasticity, or *Hooke-Duhamel law*). Which is the physical meaning of α?

13. Using the Hooke-Duhamel law, find the stress in a cube, whose thermo-elastic constants are E, ν and α, when it undergo a change of temperature θ; the cube is completely immersed in an infinitely rigid medium.

14. A rectangular plate, isotropic and with constants λ and μ, is attached on a horizontal side of length b (the other side is h) and can slip along it. It is subjected only to its own weight γ, per unit of area.

    i. Determine the boundary conditions;

    ii. calculate the stress field;

    iii. determine the final surface of the plate.

15. The circle
$$X_1^2 + X_2^2 = 1$$
is subjected to the deformation defined by
$$\begin{cases} x_1 = a\ X_1 + b\ X_2 \\ x_2 = -b\ X_1 + a\ X_2 \end{cases} \qquad a, b \in \mathbb{R} - \{0\}. \tag{3.142}$$

    i. for which values of a and b the deformation can be considered as infinitesimal?

    ii. in such a case, find the final shape of the circle;

    iii. if the circle is composed by an elastic material whose constants are λ and μ, determine, in the absence of body forces, which are the tractions to be applied to the circle to obtain the given deformation.

16. A cylinder of radius R and height $\gg R$ is composed by a thermo-elastic material whose constants are $\lambda, \mu, \alpha > 0$. It is surrounded by an infinitely rigid medium, and heated to a temperature θ. Knowing that the friction coefficient for the contact cylinder-medium is ν, find the torque to be applied per unit length of the axis in order to make the cylinder turn.

17. In an ancient manuscript of Leonardo da Vinci, a figure has been recently discovered which suggests that the famous Italian genius had probably realized the mechanics of bent beams.

    Inspired by this discovery, let us try to trace the possible track from the intuition of Leonardo to modern mechanics: we consider a beam with rectangular cross-section; b is the width and h the height of the section, while the beam's length is ℓ. We chose a frame with the axis x_1 horizontal, x_2 vertical, both in the plane of the cross-section, and x_3 is the axis passing through the centre of all the sections (the beam axis). Interpreting the figure of Leonardo, we assume that the displacement field is
$$\mathbf{u} = \psi\ x_2 x_3\ \mathbf{e}_3, \quad \psi \in \mathbb{R}. \tag{3.143}$$
    The material is assumed to be isotropic of constants E and ν and the displacements and strains infinitesimal.

i. determine the strain field $\boldsymbol{\varepsilon}$;

ii. find the volume change;

iii. determine the stress field $\boldsymbol{\sigma}$;

iv. determine the *formula of Navier*, relating σ_{33} to its resultant moment on the cross section and to the geometrical data of the section.

18. Consider the case of conservative body forces: $\mathbf{b} = \nabla\varphi$, with φ the force potential. Write the Beltrami-Michell equations for such a case and show that if φ is harmonic, then $\Delta\Theta = \Delta(\mathrm{tr}\boldsymbol{\varepsilon}) = 0$ and $\Delta^2\sigma_{ij} = \Delta^2\varepsilon_{ij} = 0\ \forall_i, j$.

Chapter 4

The Saint-Venant Problem

4.1 Problem definition

One of the most important applications of the theory of elasticity is the study of elastic beams. This problem, important *per se* and for applications, is rather complicate. It can be approached by different ways; in this Chapter, we look at a beam as it is in its reality of a three-dimensional body, while in the next one we will consider a beam as an ideal one-dimensional object.

The study of the beams needs some precision: a standard problem must be considered in order to define and solve a specific case, sufficiently representative of interesting applications. This standard problem is known in the literature as the *Saint-Venant Problem* after the name of the French scientist that defined and solved it (1855).

The Problem of Saint-Venant is defined as follows:

- the body Ω object of the study, the *beam*, is a cylinder (the *Saint-Venant cylinder*) of finite length ℓ; hence, the cross section S, of any possible form, but simply connected, is constant;
- the material is linear elastic, homogeneous and isotropic;
- the cylinder is charged by tractions only at its ends; the system of applied forces is equilibrated; tractions on the lateral surface and body forces are absent;
- the dimensions of the beam are such that $\ell \gg d$, with $d = \sup\{\text{chords of } S\}$; the reason for this assumption will be clear further;
- the objective is always the same: find $\mathbf{u}, \boldsymbol{\varepsilon}, \boldsymbol{\sigma}$ everywhere in Ω.

With these assumptions, the system to be studied is of the type in Fig. 4.1; the cross section represented on the left is seen from the positive direction of x_3. We chose once and for all a standard frame $\mathcal{R} = \{o; x_1, x_2, x_3\}$ with o the centroid of one of the end sections, x_3 the axis connecting the centroids of all the sections of the beam and the two axes x_1 and x_2, that belong to the end section $x_3 = 0$, coincide with two principal axes of inertia of the section, see Fig. 4.1. To be remarked that, classically, the frame used in the Saint-Venant Problem is negatively oriented. We denote by S_0 the base at $x_3 = 0$, with

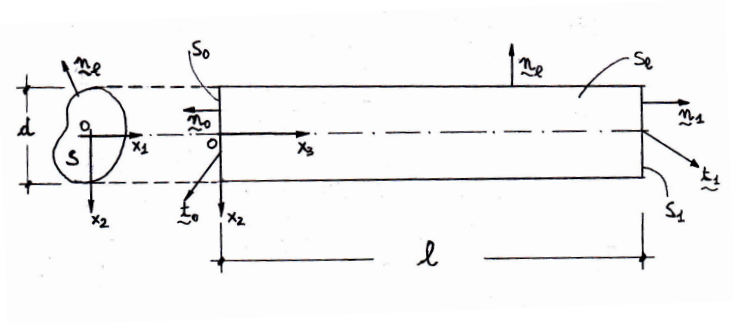

Figure 4.1: The cylinder of Saint-Venant.

S_1 that at $x_3 = \ell$ and with S_l the lateral surface; on these three surfaces, the outward unit normal is respectively $\mathbf{n}_0 = (0, 0, -1)$, $\mathbf{n}_1 = (0, 0, 1)$ and $\mathbf{n}_l = (n_1, n_2, 0)$. It is apparent then that $\partial\Omega_t = S_0 \cup S_1 \cup S_l$, $\partial\Omega_u = \emptyset$.

The forces on the two bases form an equilibrated system: $\mathbf{R} = \mathbf{o}$, $\mathbf{M}_o = \mathbf{o}$.

Then, the problem to be solved is: determine $\mathbf{u}, \boldsymbol{\varepsilon}, \boldsymbol{\sigma}$ such that:

$$
\begin{aligned}
&\text{in } \Omega && \begin{cases} \operatorname{div}\boldsymbol{\sigma} = \mathbf{o}, \\ \boldsymbol{\sigma} = 2\mu\, \boldsymbol{\varepsilon} + \lambda\, \operatorname{tr}\boldsymbol{\varepsilon}\, \mathbf{I}, \\ \boldsymbol{\varepsilon} = \dfrac{\nabla\mathbf{u} + \nabla^\top\mathbf{u}}{2}; \end{cases} \\
&\text{on } S_0 && \boldsymbol{\sigma}\, \mathbf{n}_0 = \mathbf{t}_0; \\
&\text{on } S_1 && \boldsymbol{\sigma}\, \mathbf{n}_1 = \mathbf{t}_1; \\
&\text{on } S_l && \boldsymbol{\sigma}\, \mathbf{n}_l = 0; \\
&\text{with} && \begin{cases} \displaystyle\int_{S_0} \mathbf{t}_0\, ds + \int_{S_1} \mathbf{t}_1\, ds = \mathbf{o}, \\ \displaystyle\int_{S_0} (p - o) \times \mathbf{t}_0\, ds + \int_{S_1} (p - o) \times \mathbf{t}_1\, ds = \mathbf{o}. \end{cases}
\end{aligned}
\tag{4.1}
$$

4.2 The Principle of Saint-Venant

The Saint-Venant Problem, as defined hereon, is too hard to be solved in its generality, especially for the fulfillment of the boundary conditions. Nevertheless, practically, the exact distribution of tractions on the ends of the beam is rarely known and often of a scarce importance. More meaningful, are the resultants of forces and moments, that are normally known quantities.

For this reason, Saint-Venant introduces at this point a famous postulate, known as the *Principle of Saint-Venant: if a distribution of forces acting on a portion of $\partial\Omega_t$ is replaced by a statically equivalent distribution, then the effects of the two distributions are essentially the same on the parts of Ω sufficiently far from the loaded portion of $\partial\Omega_t$.*

This is just an empirical principle that has a strong effect in view of the resolution of the Saint-Venant Problem. In fact, because $\ell \gg d$, replacing the actual distributions of $\mathbf{t}_0$

and $\mathbf{t}_1$ on S_0 and S_1 has an appreciable effect only close to the ends, while in the rest of the beam the static regime, i.e. the distribution of $\mathbf{u}, \boldsymbol{\varepsilon}, \boldsymbol{\sigma}$ is not appreciably affected by such a change.

Experimentally, it has been seen that the length where the static regime is modified if the distribution of the forces on the ends is changed is of the order of d.

The Principle of Saint-Venant constitutes one of the key points for the resolution of the Saint-Venant Problem: the solution to be found will be, near the ends, either exact, i.e. the tractions on the ends are applied in the way specified by the solution, either an approximation of the real solution, satisfying the only requirement to be statically equivalent to the real one.

Finally, because $\ell \gg d$, only a small part of the beam will be concerned with a solution different from the theoretical one, the one found applying the Principle of Saint-Venant after introducing an appropriate distribution of tractions on the ends, statically equivalent to the real ones.

To within a distance of the order of d from the ends, such a theoretical solution is not appropriate, the difference with the real one becoming too important; in such zones, the correct distribution of strain and stress should be looked for by other ways, for instance by a complete three-dimensional analysis.

4.3 The four fundamental cases

Thanks to the Saint-Venant Principle, we are concerned only with the knowledge of $\mathbf{F}$, the resultant of tractions, and $\mathbf{M}$, the resultant moment of the tractions, on the ends, both applied in correspondence of the centroid of the section.

Actually, it is only needed the knowledge of $\mathbf{F}$ and $\mathbf{M}$ on S_0, because for the equilibrium

$$\mathbf{F}_\ell = -\mathbf{F}_0, \quad \mathbf{M}_\ell = -[\mathbf{M}_0 + (C_\ell - o) \times \mathbf{F}_0], \tag{4.2}$$

where the subscript 0 indicates a quantity of the end $x_3 = 0$ while the subscript ℓ of the end $x_3 = \ell$ and C_ℓ is the centroid of this last.

$\mathbf{F}$ can be decomposed into two parts (in the following, we classically denote the components of $\mathbf{F} = (T_1, T_2, N)$):

- the axial component $\rightarrow \quad \mathbf{N} = N\ \mathbf{e}_3$;
- the shear component $\rightarrow \quad \mathbf{T} = T_1\ \mathbf{e}_1 + T_2\ \mathbf{e}_2$.

The same can be done for $\mathbf{M}$:

- the axial component (*twisting moment* or *torque*) $\rightarrow \quad \mathbf{M}^T = M_3\ \mathbf{e}_3$;
- the flexural component (*bending moment*) $\rightarrow \quad \mathbf{M} = M_1\ \mathbf{e}_1 + M_2\ \mathbf{e}_2$.

Using the principle of superposition of the effects and the Saint-Venant Principle, our problem can then be split into the following four cases, to be solved separately:

i. **extension**: on S_0, the cylinder is subjected only to $\mathbf{N}$;

ii. **bending**: on S_0, the cylinder is acted upon only by $\mathbf{M}$;

iii. **torsion**: on S_0, the cylinder is submitted only to $\mathbf{M}^T$;

iv. **shear**: on S_0, the cylinder is loaded only by $\mathbf{T}$.

In the following, we will tackle each one of these four cases separately; of course, any combination of the above cases can be analyzed summing up the effects of the elementary cases.

4.4 The semi-inverse method

Though reduced to four elementary cases, the Saint-Venant Problem remains hard to be solved, so Saint-Venant has proposed and used also a general approach, the famous *semi inverse method of solution*: for each one of the above four cases, some, plausible, assumptions are made about the distribution of $\mathbf{u}$, $\boldsymbol{\varepsilon}$ or $\boldsymbol{\sigma}$, leaving anyway enough freedom for satisfying the conditions of equilibrium and compatibility. Then, once all the equations satisfied, the uniqueness theorem of Kirchhoff guarantees that what has been conjectured is actually the only possible solution for the case in object.

4.5 The fundamental assumption

According to the semi inverse method, for each one of the four cases above we will introduce special assumptions, specially adapted to the case to be studied. In addition, we make a general assumption, valid for all the cases:

$$\sigma_{11} = \sigma_{22} = \sigma_{12} = 0 \quad \forall p \in \Omega. \tag{4.3}$$

This assumption is motivated by the same nature of the actions applied on the ends, that are likely to produce only elongation and shearing of the fibers parallel to x_3, but not of compression or tension in the directions x_1 and x_2 nor shear of the cross section.

This assumption, though plausible, is anyway rather heavy, because now we have still 15 equations but only 12 unknowns: the problem can be overdetermined. So, for each one of the four cases, care must be taken to make the conjecture to be the solution.

A general consequence concerns equilibrium equations, that for the assumption (4.3) become

$$\mathrm{div}\boldsymbol{\sigma} = \mathbf{o} \;\rightarrow \begin{cases} \sigma_{13,3} = 0, \\ \sigma_{23,3} = 0, \\ \sigma_{13,1} + \sigma_{23,2} + \sigma_{33,3} = 0. \end{cases} \tag{4.4}$$

Hence,

$$\sigma_{13} = \sigma_{13}(x_1, x_2), \quad \sigma_{23} = \sigma_{23}(x_1, x_2), \tag{4.5}$$

so that, differentiating with respect to x_3 the last equation gives

$$\sigma_{33,33} = 0, \tag{4.6}$$

i.e., σ_{33} is a linear function of x_3. In addition, for the (4.3), $\mathrm{tr}\boldsymbol{\sigma} = \sigma_{33}$ and by the Beltrami equations we know that for $\mathbf{b} = \text{const}$ ($\mathbf{b} = \mathbf{o}$ in our case),

$$\Delta(\mathrm{tr}\boldsymbol{\sigma}) = 0 \;\rightarrow\; \Delta\sigma_{33} = 0, \tag{4.7}$$

so, for eq. (4.6) we get the equation

$$\sigma_{33,11} + \sigma_{33,22} = 0. \tag{4.8}$$

We can say more than that; in fact, for $\mathbf{b} = \text{const.}$ the Beltrami equations of this case give, for eqs. (4.3), (4.5) and (4.6),

$$\Delta\sigma_{ij} + \frac{1}{1+\nu}\sigma_{33,ij} = 0 \;\rightarrow\; \begin{cases} \sigma_{33,11} = 0, \\ \sigma_{33,12} = 0, \\ \sigma_{33,22} = 0, \\ (1+\nu)(\sigma_{13,11} + \sigma_{13,22}) + \sigma_{33,13} = 0, \\ (1+\nu)(\sigma_{23,11} + \sigma_{23,22}) + \sigma_{33,23} = 0, \\ \sigma_{33,33} = 0. \end{cases} \tag{4.9}$$

As a consequence, σ_{33} is a function which is at most linear in x_1, x_2, x_3 and it cannot depend upon the product x_1x_2:

$$\sigma_{33} = c_0 + c_1x_1 + c_2x_2 + c_3x_3 + c_4x_1x_3 + c_5x_2x_3; \tag{4.10}$$

this is the most general expression for σ_{33}.

About the boundary conditions, on S_l it is

$$\boldsymbol{\sigma}\mathbf{n}_l = \mathbf{o}, \quad \mathbf{n}_l = (n_1, n_2, 0) \quad \Rightarrow \quad \sigma_{13}n_1 + \sigma_{23}n_2 = 0. \tag{4.11}$$

If we call

$$\boldsymbol{\tau} = \sigma_{13}\mathbf{e}_1 + \sigma_{23}\mathbf{e}_2 \tag{4.12}$$

the *tangential stress vector*, which is the resultant of the shear stresses in a point, then the last equation can be written as

$$\boldsymbol{\tau} \cdot \mathbf{n}_l = 0 \;\text{ on }\; S_l : \tag{4.13}$$

the tangential stress is tangent to the cross section contour. This is a general fundamental result of the Saint-Venant Problem.

4.6 Global balances

We define now the *internal actions*, that are the six forces and moments, with respect to the centroid, resultant of the stress distribution in a cross section S:

1. axial force:

$$N(x_3) = \int_S \sigma_{33}\, ds; \tag{4.14}$$

2. shear force along x_1:

$$T_1(x_3) = \int_S \sigma_{13}\ ds; \tag{4.15}$$

3. shear force along x_2:

$$T_2(x_3) = \int_S \sigma_{23}\ ds; \tag{4.16}$$

4. bending moment around x_1:

$$M_1(x_3) = \int_S \sigma_{33}\ x_2\ ds; \tag{4.17}$$

5. bending moment around x_2:

$$M_2(x_3) = -\int_S \sigma_{33}\ x_1\ ds; \tag{4.18}$$

6. twisting moment (around x_3):

$$M_3(x_3) = \int_S (\sigma_{23}\ x_1 - \sigma_{13}\ x_2)\ ds. \tag{4.19}$$

All the above internal actions are here intended, conventionally, to be the resultant of the stress that the part of the beam from x_3 to ℓ apply to the part from 0 to x_3 across the section S at x_3; of course, the part from 0 to x_3 apply to that from x_3 to ℓ exactly the opposite actions. We can now write the balance of forces and moments from 0 to x_3:

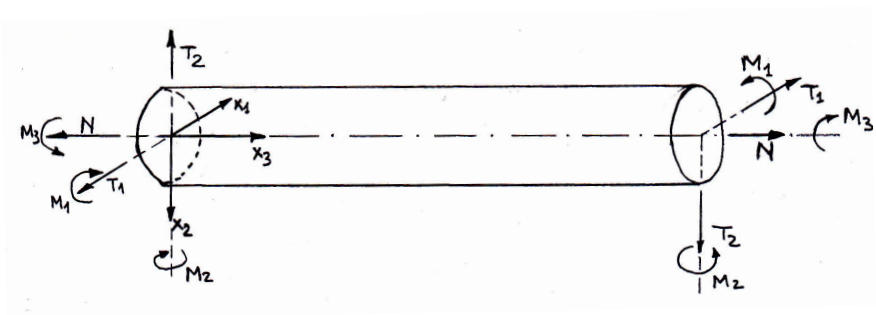

Figure 4.2: Conventions for the signs of the internal actions.

remembering that the only actions are applied to the ends, and using the convention for the positive signs of the internal actions shown in Fig. 4.2, which means that on S_0 it is $\mathbf{F}_0 = (-T_1, -T_2, -N), \mathbf{M}_0 = (-M_1, -M_2, -M_3)$, the expressions of the internal actions

at the abscissa x_3 are

$$
\begin{aligned}
N(x_3) &= -\mathbf{F}_0 \cdot \mathbf{e}_3 = N, \\
T_1(x_3) &= -\mathbf{F}_0 \cdot \mathbf{e}_1 = T_1, \\
T_2(x_3) &= -\mathbf{F}_0 \cdot \mathbf{e}_2 = T_2, \\
M_1(x_3) &= -[\mathbf{M}_0 + (C - o) \times \mathbf{F}_0] \cdot \mathbf{e}_1 \\
&= -[-M_1\mathbf{e}_1 - M_2\mathbf{e}_2 - M_3\mathbf{e}_3 + x_3\mathbf{e}_3 \times (T_1\mathbf{e}_1 + T_2\mathbf{e}_2)] \cdot \mathbf{e}_1 \\
&= M_1 + T_2\ x_3, \\
M_2(x_3) &= -[\mathbf{M}_0 + (C - o) \times \mathbf{F}_0] \cdot \mathbf{e}_2 \\
&= -[-M_1\mathbf{e}_1 - M_2\mathbf{e}_2 - M_3\mathbf{e}_3 + x_3\mathbf{e}_3 \times (T_1\mathbf{e}_1 + T_2\mathbf{e}_2)] \cdot \mathbf{e}_2 \\
&= M_2 - T_1\ x_3, \\
M^T(x_3) &= -\mathbf{M}_0 \cdot \mathbf{e}_3 = M_3.
\end{aligned}
\tag{4.20}
$$

We can now pass to examine the four fundamental cases introduced in Sect. 4.3.

4.7 Extension

The only resultant on S_0 different from zero is N; according to the semi-inverse method, we make the following conjecture on the distribution of the stresses:

$$
\sigma_{13} = \sigma_{23} = 0, \quad \sigma_{33} = c, \quad c \in \mathbb{R} \quad \rightarrow \quad \boldsymbol{\sigma} = c\ (\mathbf{e}_3 \otimes \mathbf{e}_3). \tag{4.21}
$$

With such a stress field, constant throughout Ω, the equilibrium and compatibility equations are obviously satisfied; $\boldsymbol{\varepsilon}$ is readily found:

$$
\boldsymbol{\varepsilon} = \frac{1+\nu}{E}\boldsymbol{\sigma} - \frac{\nu}{E}\mathrm{tr}\boldsymbol{\sigma}\ \mathbf{I} \ \rightarrow\ \boldsymbol{\varepsilon} = \frac{c}{E}\left[\mathbf{e}_3 \otimes \mathbf{e}_3 - \nu(\mathbf{e}_1 \otimes \mathbf{e}_1 + \mathbf{e}_2 \otimes \mathbf{e}_2)\right], \tag{4.22}
$$

or in matrix form

$$
\boldsymbol{\sigma} = \begin{bmatrix} 0 & 0 & 0 \\ 0 & 0 & 0 \\ 0 & 0 & c \end{bmatrix}, \qquad \boldsymbol{\varepsilon} = \frac{c}{E}\begin{bmatrix} -\nu & 0 & 0 \\ 0 & -\nu & 0 \\ 0 & 0 & 1 \end{bmatrix}. \tag{4.23}
$$

Now, the displacement field can be calculated:

$$
u_{1,1} = u_{2,2} = -\frac{\nu}{E}c, \quad u_{3,3} = \frac{c}{E}, \quad u_{1,2} + u_{2,1} = u_{1,3} + u_{3,1} = u_{2,3} + u_{3,2} = 0, \tag{4.24}
$$

which gives (for the integration constants, we assume that the end S_0 and the axis x_3 are fixed)

$$
u_1 = -\frac{\nu}{E}c\ x_1, \quad u_2 = -\frac{\nu}{E}c\ x_2, \quad u_3 = \frac{c}{E}\ x_3. \tag{4.25}
$$

Finally, one has to check the boundary conditions:

- on S_l, $\mathbf{n}_l = (n_1, n_2, 0)$ so

$$
\boldsymbol{\sigma}\ \mathbf{n}_l = c(\mathbf{e}_3 \otimes \mathbf{e}_3)(n_1\mathbf{e}_1 + n_2\mathbf{e}_2) = \mathbf{o}; \tag{4.26}
$$

- on S_0, $\mathbf{n}_0 = (0, 0, -1)$ so

$$\boldsymbol{\sigma}\ \mathbf{n}_0 = -c(\mathbf{e}_3 \otimes \mathbf{e}_3)\mathbf{e}_3 = -c\ \mathbf{e}_3; \tag{4.27}$$

- on S_1, $\mathbf{n}_1 = (0, 0, 1)$ so

$$\boldsymbol{\sigma}\ \mathbf{n}_1 = c(\mathbf{e}_3 \otimes \mathbf{e}_3)\mathbf{e}_3 = c\ \mathbf{e}_3; \tag{4.28}$$

The last two results mean that the tractions are uniformly distributed over the end cross sections; this is a direct consequence of the assumed conjecture and of the Saint-Venant Principle. Passing to the resultant we can determine the last unknown, c: on S_1, $N(x_3 = \ell) = N$. Then

$$\int_{S_l} \sigma_{33}\ ds = \int_{S_l} c\ ds = N \quad \Rightarrow \quad c = \frac{N}{A}, \tag{4.29}$$

where A is the area of the cross section. Finally,

$$\boldsymbol{\sigma} = \frac{N}{A}\mathbf{e}_3 \otimes \mathbf{e}_3, \tag{4.30}$$

$$\boldsymbol{\varepsilon} = \frac{N}{EA}\left[\mathbf{e}_3 \otimes \mathbf{e}_3 - \nu(\mathbf{e}_1 \otimes \mathbf{e}_1 + \mathbf{e}_2 \otimes \mathbf{e}_2)\right], \tag{4.31}$$

$$\mathbf{u} = \frac{N}{EA}(-\nu\ x_1, -\nu\ x_2, x_3). \tag{4.32}$$

The quantity EA is the *extension stiffness* of the beam. Because all the equations are satisfied, for the Kirchhoff theorem eqs. (4.30), (4.31) and (4.32) are the solution of the Saint-Venant Problem for the extension case.

4.8 Bending

In pure bending, the only action different from zero on the end S_0 is

$$\mathbf{M}_0 = M_1\ \mathbf{e}_1 + M_2\ \mathbf{e}_2, \tag{4.33}$$

while $T_1 = T_2 = N = M_3 = 0$. Using the superposition principle, we consider separately the two cases of M_1 and M_2, and we study first M_1.

4.8.1 Conjecture on the stress field

The beam is acted upon by tractions on the ends that have as unique global effect a moment around the axis x_1. We tentatively assume, following the semi-inverse method, that $\boldsymbol{\sigma}$ is defined by

$$\sigma_{13} = \sigma_{23} = 0, \quad \sigma_{33} = b\ x_2, \quad b \in \mathbb{R} \quad \rightarrow \quad \boldsymbol{\sigma} = b\ x_2(\mathbf{e}_3 \otimes \mathbf{e}_3), \tag{4.34}$$

or in matrix form

$$\boldsymbol{\sigma} = \begin{bmatrix} 0 & 0 & 0 \\ 0 & 0 & 0 \\ 0 & 0 & b\ x_2 \end{bmatrix}, \tag{4.35}$$

i.e. we assume a linear distribution of σ_{33} with x_2, the axis orthogonal to x_1, which is the axis of M_1. Unlike the extension case, the stress state is no more homogeneous.

The equilibrium equations reduce to the only

$$\sigma_{33,3} = 0, \tag{4.36}$$

which is obviously satisfied by the assumed stress field, while the Beltrami-Michell compatibility equations are all identically null, because $\sigma_{13} = \sigma_{23} = 0$ and σ_{33} is linear.

About the boundary conditions:

- on $S_l,\ \mathbf{n}_l = (n_1, n_2, 0)$ so

$$\boldsymbol{\sigma}\ \mathbf{n}_l = b\ x_2(\mathbf{e}_3 \otimes \mathbf{e}_3)(n_1\mathbf{e}_1 + n_2\mathbf{e}_2) = \mathbf{o}; \tag{4.37}$$

- on $S_0,\ \mathbf{n}_0 = (0, 0, -1)$ so

$$\boldsymbol{\sigma}\ \mathbf{n}_0 = -b\ x_2(\mathbf{e}_3 \otimes \mathbf{e}_3)\mathbf{e}_3 = -b\ x_2\ \mathbf{e}_3; \tag{4.38}$$

- on $S_1,\ \mathbf{n}_1 = (0, 0, 1)$ so

$$\boldsymbol{\sigma}\ \mathbf{n}_1 = b\ x_2(\mathbf{e}_3 \otimes \mathbf{e}_3)\mathbf{e}_3 = b\ x_2\ \mathbf{e}_3. \tag{4.39}$$

The datum on the ends is the knowledge of M_1, so, considering e.g. S_1, one has

$$\begin{aligned} &\int_{S_1} (p - o) \times \boldsymbol{\sigma}\mathbf{n}_1\ ds = M_1\mathbf{e}_1\ \rightarrow \\ &b\int_{S_1} (x_1\mathbf{e}_1 + x_2\mathbf{e}_2) \times x_2\mathbf{e}_3\ ds = M_1\mathbf{e}_1\ \rightarrow \\ &b\int_{S_1} (-x_1x_2\mathbf{e}_2 + x_2^2\mathbf{e}_1)\ ds = M_1\mathbf{e}_1. \end{aligned} \tag{4.40}$$

Remembering that x_1 and x_2 are central principal axes of inertia, the first term under integral is null (it is a product of inertia, always null when done with respect to a couple of principal axes) while

$$\int_{S_1} x_2^2\ ds := J_1, \tag{4.41}$$

the moment of inertia of the cross section around x_1. Finally we get

$$b\ J_1\ \mathbf{e}_1 = M_1\ \mathbf{e}_1\ \rightarrow\ b = \frac{M_1}{J_1}, \tag{4.42}$$

which gives the *formula of Navier*

$$\sigma_{33} = \frac{M_1\ x_2}{J_1}, \tag{4.43}$$

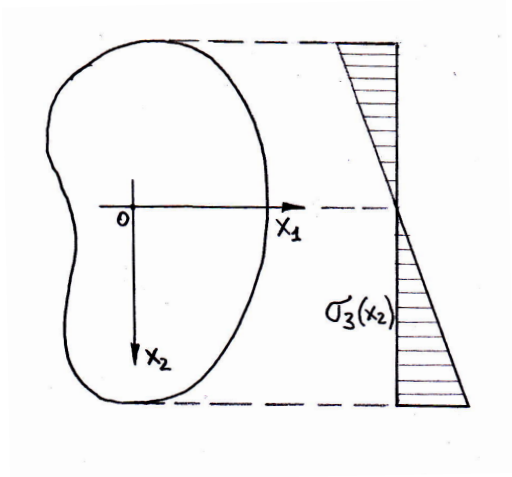

Figure 4.3: Variation of σ_{33} on a cross section.

relating the stress σ_{33} to the mechanical action, the geometrical characteristics of the cross section, condensed in J_1, and the position, namely the distance from the centroid. The formula of Navier shows that σ_{33} takes its extreme values on the points of the cross section whose distance from the the axis x_1 is the highest, while on the points of the axis x_1, $\sigma_{33} = 0$: the axis x_1 is the *neutral axis*, see Fig. 4.3.

Because all the conditions are fulfilled, for the Kirchhoff theorem the field $\boldsymbol{\sigma}$ so found is the solution.

4.8.2 The strain field

We can now determine $\boldsymbol{\varepsilon}$:

$$\boldsymbol{\varepsilon} = \frac{1+\nu}{E}\boldsymbol{\sigma} - \frac{\nu}{E}\mathrm{tr}\boldsymbol{\sigma}\ \mathbf{I} \ \rightarrow\ \boldsymbol{\varepsilon} = \frac{M_1\ x_2}{EJ_1}\left[\mathbf{e}_3 \otimes \mathbf{e}_3 - \nu(\mathbf{e}_1 \otimes \mathbf{e}_1 + \mathbf{e}_2 \otimes \mathbf{e}_2)\right], \tag{4.44}$$

or in matrix form

$$\boldsymbol{\varepsilon} = \frac{M_1\ x_2}{EJ_1}\begin{bmatrix} -\nu & 0 & 0 \\ 0 & -\nu & 0 \\ 0 & 0 & 1 \end{bmatrix}. \tag{4.45}$$

The quantity EJ_1 is the *bending stiffness* of the beam (relative to the axis x_1).

4.8.3 Displacements

We can now pass to calculate $\mathbf{u}$:

$$\begin{aligned} u_{1,1} = u_{2,2} = -\nu\frac{M_1}{EJ_1}x_2, \quad u_{3,3} = \frac{M_1}{EJ_1}x_2, \\ u_{1,2} + u_{2,1} = u_{1,3} + u_{3,1} = u_{2,3} + u_{3,2} = 0. \end{aligned} \tag{4.46}$$

The displacements are hence quadratic functions; integrating $u_{3,3}$ we get

$$u_3 = \frac{M_1}{EJ_1}x_2x_3 + w(x_1, x_2), \tag{4.47}$$

with $w(x_1, x_2)$ an unknown function. Then, from eqs. $(4.46_{5,6})$, we have

$$u_{1,3} = -w_{,1}, \quad u_{2,3} = -\frac{M_1}{EJ_1}x_3 - w_{,2}, \tag{4.48}$$

so

$$u_1 = -x_3 w_{,1} + u(x_1, x_2), \quad u_2 = -\frac{1}{2}\frac{M_1}{EJ_1}x_3^2 - x_3 w_{,2} + v(x_1, x_2), \tag{4.49}$$

with $u(x_1, x_2)$ and $v(x_1, x_2)$ two unknown functions.

From eqs. $(4.46_{1,2})$ we obtain

$$-x_3 w_{,11} + u_{,1} = -\nu\frac{M_1}{EJ_1}x_2, \quad -x_3 w_{,22} + v_{,2} = -\nu\frac{M_1}{EJ_1}x_2 \tag{4.50}$$

and because these two equations must be true $\forall x_3$, it is necessarily

$$w_{,11} = w_{,22} = 0, \tag{4.51}$$

i.e. $w(x_1, x_2)$ is harmonic, so we get

$$u = -\nu\frac{M_1}{EJ_1}x_1 x_2 + f_1(x_2), \quad v = -\frac{\nu}{2}\frac{M_1}{EJ_1}x_2^2 + f_2(x_1), \tag{4.52}$$

with $f_1(x_2)$ and $f_2(x_1)$ two unknown functions. So:

$$\begin{aligned} u_1 &= -x_3 w_{,1} - \nu\frac{M_1}{EJ_1}x_1 x_2 + f_1(x_2), \\ u_2 &= -\frac{1}{2}\frac{M_1}{EJ_1}x_3^2 - x_3 w_{,2} - \frac{\nu}{2}\frac{M_1}{EJ_1}x_2^2 + f_2(x_1), \end{aligned} \tag{4.53}$$

which inserted into eq. (4.46_4) gives

$$-2x_3 w_{,12} - \nu\frac{M_1}{EJ_1}x_1 + f_{1,2} + f_{2,1} = 0. \tag{4.54}$$

Because the last three terms are independent from x_3, necessarily

$$w_{,12} = 0, \tag{4.55}$$

so finally $w(x_1, x_2)$ must be linear in x_1 and x_2:

$$w = \beta x_1 + \gamma x_2 + c_0 \tag{4.56}$$

and from what remains of the last equation we get

$$f_{1,2} = -\alpha, \quad f_{2,1} - \nu\frac{M_1}{EJ_1}x_1 = \alpha, \tag{4.57}$$

so

$$f_1 = -\alpha x_2 + c_1, \quad f_2 = \frac{\nu}{2}\frac{M_1}{EJ_1}x_1^2 + \alpha x_1 + c_2, \tag{4.58}$$

with $\alpha, \beta, \gamma, c_0, c_1, c_2$ six arbitrary constants.

Finally, the displacement field is of the type

$$
\begin{aligned}
u_1 &= -\nu \frac{M_1}{EJ_1} x_1 x_2 - \alpha x_2 - \beta x_3 + c_1, \\
u_2 &= \frac{M_1}{2EJ_1} (\nu x_1^2 - \nu x_2^2 - x_3^2) + \alpha x_1 - \gamma x_3 + c_2, \\
u_3 &= \frac{M_1}{EJ_1} x_2 x_3 + \beta x_1 + \gamma x_2 + c_0.
\end{aligned}
\tag{4.59}
$$

The integration arbitrary constants are determined by the boundary conditions on the beam ends; if we fix the end S_0 so that

$$
u_1 = u_2 = u_3 = u_{1,3} = u_{2,3} = u_{2,1} = 0, \tag{4.60}
$$

then we get

$$
\alpha = \beta = \gamma = c_0 = c_1 = c_2 = 0 \tag{4.61}
$$

and finally the displacement field $\mathbf{u}$ is defined by the components

$$
\begin{aligned}
u_1 &= -\nu \frac{M_1}{EJ_1} x_1 x_2, \\
u_2 &= \frac{M_1}{2EJ_1} (\nu x_1^2 - \nu x_2^2 - x_3^2), \\
u_3 &= \frac{M_1}{EJ_1} x_2 x_3.
\end{aligned}
\tag{4.62}
$$

Looking at u_3 or also at eq. (4.44), we can see that fibers on the opposite sides of axis x_1 suffer deformations of the opposite sign: elongation on one side, contraction on the other one, while the fibers on axis x_1 remain unchanged. This confirms the name *neutral axis* given to x_1.

4.8.4 The Euler-Bernoulli law

Let us now consider a point of the central axis, $o = (0, 0, x_3)$; the displacement of such a point is

$$
\mathbf{u}_0 = \left(0, -\frac{M_1}{2EJ_1} x_3^2, 0\right), \tag{4.63}
$$

so its new position $o' = o + \mathbf{u}_0$ has coordinates

$$
\begin{aligned}
\xi_1 &= 0, \\
\xi_2 &= -\frac{M_1}{2EJ_1} x_3^2, \\
\xi_3 &= x_3.
\end{aligned}
\tag{4.64}
$$

The deformed axis of the beam is hence a parabola. The plane that contains the deformed axis is called the *plane of bending*. In this case, it is the same plane containing the couple M_1.

The curvature χ of the axis is given by the general formula for the curvature of a plane curve:

$$\chi = \frac{\xi_{2,33}}{[1 + (\xi_{2,3})^2]^{\frac{3}{2}}}. \tag{4.65}$$

When, as in our case, strains are small, then

$$|\xi_{2,3}| \ll 1, \tag{4.66}$$

so it can be neglected in front of 1, which gives the approximation for the curvature

$$\chi \simeq \xi_{2,33}. \tag{4.67}$$

From this last and from eq. (4.64_2) we get hence

$$\chi = -\frac{M_1}{EJ_1}, \tag{4.68}$$

which is the celebrated *Euler-Bernoulli law for bending*[1]. It relates the cause, the bending moment M_1, to the effect, the curvature χ, through the mechanical and geometrical characteristics of the beam, condensed in the bending stiffness EJ_1.

4.8.5 Deformation of the cross section

Equation (4.64) gives the tangent $\mathbf{t}$ to the deformed central line:

$$\mathbf{t} = o'_{,3} = (0, -\frac{M_1 x_3}{EJ_1}, 1) \tag{4.69}$$

[1]This result can be obtained also through a more direct, geometrical approach: we *assume* that *any cross section remains plane and orthogonal to the deformed axis*; this assumption, which is the constitutive assumption of the *Euler-Bernoulli beam theory* was a result in the rigorous demonstration done before. Then, the length of a fiber on the central axis x_3 subtended by a small angle $d\theta$ is

$$ds_0 = R\ d\theta,$$

where R is the radius of curvature of the deformed central axis; such a fiber is not stretched. For the Euler-Bernoulli assumption, the length of a (stretched) fiber subtended by the same angle $d\theta$ but at a distance x_2 from the central axis is

$$ds = (R + x_2)\ d\theta,$$

so that the extension ε_{33} is given by

$$\varepsilon_{33} = \frac{ds - ds_0}{ds_0} = \frac{(R + x_2)\ d\theta - R\ d\theta}{R\ d\theta} = \frac{x_2}{R}.$$

We now assume that such an extension is produced by a longitudinal stress σ_{33}, which is given by the Lamé's equations as

$$\sigma_{33} = E\varepsilon_{33} = \frac{x_2}{R}E.$$

Remembering that the axes x_1 and x_2 are principal central axes of inertia, when integrating upon the cross section the stress σ_{33} and its moments about the three axes, the only non vanishing term is the moment about the axis x_1 and we obtain easily

$$M_1 = -\int_S \sigma_{33} x_2\ ds = -\frac{E}{R}\int_S x_2^2\ ds = -\frac{EJ_1}{R} \ \rightarrow\ \chi = \frac{1}{R} = -\frac{M_1}{EJ_1}.$$

The sign $-$ is due to the convention on the positive value for M_1.

or, introducing the *radius of curvature*

$$R = \frac{1}{\chi} = \frac{EJ_1}{M_1}, \tag{4.70}$$

$$\mathbf{t} = (0, -\frac{x_3}{R}, 1). \tag{4.71}$$

Equation (4.62_3) shows that all the points of a cross section remain in a plane: any cross section is transformed into another planar section, turned with respect to the original one. In addition, because the cross section remains planar, we can neglect, for the while, the displacement in the plane of the cross section and consider only its rigid rotation about the neutral axis. So,

$$\mathbf{u} = \left(0, -\frac{x_3^2}{2R}, \frac{x_2 x_3}{R}\right) \tag{4.72}$$

and any point $p = (x_1, x_2, x_3)$ of such a section is transformed into

$$p' = p + \mathbf{u} = (x_1, x_2 - \frac{x_3^2}{2R}, x_3 + \frac{x_2 x_3}{R}). \tag{4.73}$$

Then, because $o' = (0, -x_3^2/2R, x_3)$, eq. (4.64), any vector $p' - o'$, lying in the plane of the deformed section, is of the type

$$p' - o' = (x_1, x_2, \frac{x_2 x_3}{R}) \tag{4.74}$$

and finally

$$\mathbf{t} \cdot (p' - o') = 0, \tag{4.75}$$

i.e., $\forall x_3$, the tangent to the deformed central line is orthogonal to any vector of the deformed cross section passing by x_3. This means that any cross section remains not only planar, but also perpendicular to the axis also after deformation.

This result is a characteristic of pure bending of beams in the framework of the Saint-Venant Problem, and it proceeds, if it is not taken as a basic hypothesis, see note 1, from the initial assumption of linear distribution for σ_{33}. To be remarked that this result is correct only for pure bending, i.e. for bending produced by end couples, while strictly speaking it is not correct for bending accompanying the shear, see Sect. 4.10.

To study how a cross section at $x_3 = \zeta$ is deformed in its plane, we consider a rectangular section of width $2b$ and height $2h$. The two vertical sides $x_1 = \pm b$ will go into

$$\eta_1 = \pm b \left(1 + \frac{\nu M_1}{EJ_1} x_2\right). \tag{4.76}$$

The two vertical sides go hence into two inclined straight lines, whose inclination does not depend upon the position of the section along the beam axis.

The upper and lower sides $x_2 = \pm h$ will go into

$$\eta_2 = \pm h + \frac{M_1}{2EJ_1}(\nu x_1^2 - \nu h^2 - \zeta^2). \tag{4.77}$$

The two horizontal sides deform hence into a parabola and the cross section becomes like in fig. 4.4

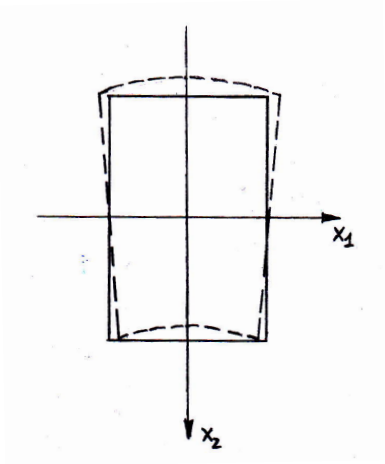

Figure 4.4: Deformation of a rectangular cross-section for pure bending.

4.8.6 Biaxial bending

The case of M_2 is evidently analogous and the computations lead to

$$\sigma_{33} = -\frac{M_2 x_1}{J_2}, \tag{4.78}$$

with J_2 the moment of inertia of the cross action about the axis x_2.

The case of *biaxial bending*, i.e. of the contemporary presence of both M_1 and M_2, is simply obtained summing up the contributions of M_1 and M_2:

$$\sigma_{33} = \frac{M_1 x_2}{J_1} - \frac{M_2 x_1}{J_2}. \tag{4.79}$$

The equation of the neutral axis is hence

$$\sigma_{33} = 0 \;\rightarrow\; \frac{M_1 x_2}{J_1} = \frac{M_2 x_1}{J_2}, \tag{4.80}$$

that can be transformed into

$$x_2 = \frac{1}{\tan\psi}\left(\frac{\rho_1}{\rho_2}\right)^2 x_1, \tag{4.81}$$

where

$$\psi = \arctan\frac{M_1}{M_2} \tag{4.82}$$

while

$$\rho_i := \sqrt{\frac{J_i}{A}} \tag{4.83}$$

is the *radius of gyration* of the cross section with respect to axis $x_i,\ i = 1, 2$.

By consequence, the inclination θ of the neutral axis on x_1 is

$$\tan\theta = \frac{x_2}{x_1} = \frac{1}{\tan\psi}\left(\frac{\rho_1}{\rho_2}\right)^2 \;\rightarrow\; \tan\theta\tan\psi = \left(\frac{\rho_1}{\rho_2}\right)^2. \tag{4.84}$$

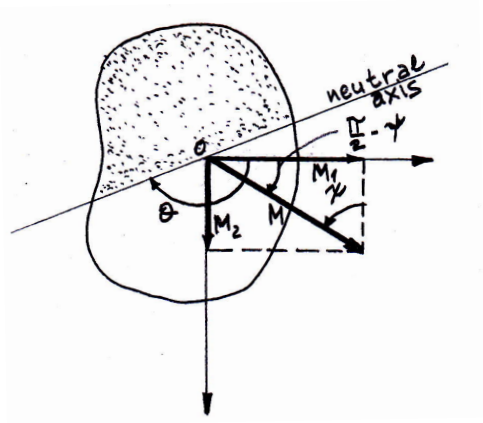

Figure 4.5: Biaxial bending.

The general situation is that depicted in Fig. 4.5. Let us consider the angle

$$\theta - \left(\frac{\pi}{2} - \psi\right) = \theta + \psi - \frac{\pi}{2}; \tag{4.85}$$

it is equal to $\pi/2$, i.e. $\mathbf{M}$ and the neutral axis are orthogonal, $\iff$

$$\theta + \psi - \frac{\pi}{2} = \frac{\pi}{2} \;\rightarrow\; \theta + \psi = \pi \;\iff\; \tan(\theta + \psi) = 0. \tag{4.86}$$

But

$$\begin{aligned} \tan(\theta + \psi) &= \frac{\tan\theta + \tan\psi}{1 - \tan\theta\tan\psi} = \frac{\frac{1}{\tan\psi}\left(\frac{\rho_1}{\rho_2}\right)^2 + \tan\psi}{1 - \left(\frac{\rho_1}{\rho_2}\right)^2} = 0 \\ &\iff \tan^2\psi = -\left(\frac{\rho_1}{\rho_2}\right)^2, \end{aligned} \tag{4.87}$$

which is impossible: $\mathbf{M}$ and the neutral axis cannot be orthogonal in the case of biaxial bending. This means that whenever $\mathbf{M}$ is not aligned with one of the two principal central axes of inertia, then $\mathbf{M}$ is not orthogonal to the neutral axis.

4.8.7 Bending and extension

If an axial force N is added to the bending moments M_1 and M_2, because all of these internal actions produce exclusively σ_{33} as stress components, their effect can be added directly and we get

$$\sigma_{33} = \frac{N}{A} + \frac{M_1 x_2}{J_1} - \frac{M_2 x_1}{J_2} = \frac{1}{A}\left(N + \frac{M_1 x_2}{\rho_1^2} - \frac{M_2 x_1}{\rho_2^2}\right). \tag{4.88}$$

It is immediately recognized that the neutral axis does not pas by the centroid of the cross section and in general it can be completely exterior to it. In such a case, the stress σ_{33} does not change of sign on the section. The general analysis of such problem needs some elements of projective geometry and it is beyond the scope of this text.

4.9 Torsion

For the case of torsion, the cylinder is acted upon on the end S_0 by tractions whose resultant is null and whose resultant moment is, for any cross section,

$$\mathbf{M}^T = M_3 \ \mathbf{e}_3. \tag{4.89}$$

The study of torsion is, mathematically speaking, much more complicate than that of extension or bending. That is why, following also a historical order, we examine first the simplest case of circular cross section, then we will pass to consider the problem of torsion for a generally shaped cross section and finally we will consider an elegant approximate solution for thin hollow sections.

4.9.1 The circular section

We consider a circular section of radius R and we make the following conjecture about the displacement vector $\mathbf{u}$ (Coulomb, 1770): *each point p moves rigidly on a circular arc, remaining on its own section S, turning of an angle which is proportional to the distance of S from the end S_0, assumed as clamped.* With such an assumption, see Fig. 4.6,

$$\forall p = (x_1, x_2, x_3) \in S, \quad \begin{cases} u_1 = r \ \cos(\alpha + \theta) - r \ \cos\theta, \\ u_2 = r \ \sin(\alpha + \theta) - r \ \sin\theta, \\ u_3 = 0, \end{cases} \tag{4.90}$$

with $r = |p - o|$ and α is the angle by which the cross action is rigidly rotated. For a small rotation,

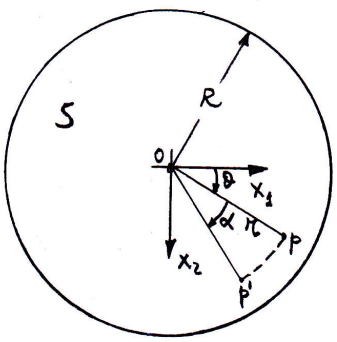

Figure 4.6: Torsion of a circular section.

$$\begin{aligned} u_1 &= r(\cos\alpha \ \cos\theta - \sin\alpha \ \sin\theta - \cos\theta) \simeq r(\cos\theta - \alpha\sin\theta - \cos\theta) \\ &= -r \ \alpha\sin\theta = -\alpha \ x_2, \\ u_2 &= r(\sin\alpha \ \cos\theta + \cos\alpha \ \sin\theta - \sin\theta) \simeq r(\alpha\cos\theta + \sin\theta - \sin\theta) \\ &= r \ \alpha\cos\theta = \alpha \ x_1, \\ u_3 &= 0. \end{aligned} \tag{4.91}$$

About the dependence of $\mathbf{u}$ from x_3, for the assumption that $\alpha(x_3)$ is proportional to the distance from S_0 we have

$$\alpha(x_3) = \alpha\ x_3, \tag{4.92}$$

with the constant α that is called the *torsion* or *twist angle*; α measures the relative rotation of two cross sections at unit distance.

Finally, the assumed displacement field is

$$\begin{aligned} u_1 &= -\alpha\ x_2 x_3, \\ u_2 &= \alpha\ x_1 x_3, \\ u_3 &= 0. \end{aligned} \tag{4.93}$$

Coulomb gave the first this kinematics of the torsion, but wrongly he assumed it valid for any cross section, which is false.

The strain field is hence

$$\boldsymbol{\varepsilon} = \frac{\nabla\mathbf{u} + \nabla^\top\mathbf{u}}{2} = \frac{\alpha}{2}\left[-x_2(\mathbf{e}_1 \otimes \mathbf{e}_3 + \mathbf{e}_3 \otimes \mathbf{e}_1) + x_1(\mathbf{e}_2 \otimes \mathbf{e}_3 + \mathbf{e}_3 \otimes \mathbf{e}_2)\right], \tag{4.94}$$

or in matrix form

$$\boldsymbol{\varepsilon} = \frac{\alpha}{2}\begin{bmatrix} 0 & 0 & -x_2 \\ 0 & 0 & x_1 \\ -x_2 & x_1 & 0 \end{bmatrix}; \tag{4.95}$$

because $\mathrm{tr}\boldsymbol{\varepsilon} = 0$, the deformation is isochoric. By the Lamé's equations we get the stress field:

$$\boldsymbol{\sigma} = 2\mu\boldsymbol{\varepsilon} + \lambda\mathrm{tr}\boldsymbol{\varepsilon}\ \mathbf{I} = \mu\alpha\left[-x_2(\mathbf{e}_1 \otimes \mathbf{e}_3 + \mathbf{e}_3 \otimes \mathbf{e}_1) + x_1(\mathbf{e}_2 \otimes \mathbf{e}_3 + \mathbf{e}_3 \otimes \mathbf{e}_2)\right], \tag{4.96}$$

or in matrix form

$$\boldsymbol{\sigma} = \mu\alpha\begin{bmatrix} 0 & 0 & -x_2 \\ 0 & 0 & x_1 \\ -x_2 & x_1 & 0 \end{bmatrix}. \tag{4.97}$$

It is immediate to check that such a stress field satisfies the equilibrium and the Beltrami-Michell's compatibility equations. For what concerns the boundary conditions,

- on S_l, $\mathbf{n}_l = (\frac{x_1}{R}, \frac{x_2}{R}, 0)$ so

$$\begin{aligned} \boldsymbol{\sigma}\ \mathbf{n}_l = \mu\alpha\,&[-x_2(\mathbf{e}_1 \otimes \mathbf{e}_3 + \mathbf{e}_3 \otimes \mathbf{e}_1) \\ &+x_1(\mathbf{e}_2 \otimes \mathbf{e}_3 + \mathbf{e}_3 \otimes \mathbf{e}_2)]\,(\frac{x_1}{R}\mathbf{e}_1 + \frac{x_2}{R}\mathbf{e}_2) = \mathbf{o}; \end{aligned} \tag{4.98}$$

- on S_0, $\mathbf{n}_0 = (0, 0, -1)$ so

$$\begin{aligned} \boldsymbol{\sigma}\ \mathbf{n}_0 = -\mu\alpha\,&[-x_2(\mathbf{e}_1 \otimes \mathbf{e}_3 + \mathbf{e}_3 \otimes \mathbf{e}_1) \\ &+x_1(\mathbf{e}_2 \otimes \mathbf{e}_3 + \mathbf{e}_3 \otimes \mathbf{e}_2)]\,\mathbf{e}_3 = \mu\alpha(x_2, -x_1, 0); \end{aligned} \tag{4.99}$$

- on S_1, $\mathbf{n}_1 = (0, 0, 1)$ so

$$\begin{aligned} \boldsymbol{\sigma}\ \mathbf{n}_1 = \mu\alpha\,&[-x_2(\mathbf{e}_1 \otimes \mathbf{e}_3 + \mathbf{e}_3 \otimes \mathbf{e}_1) \\ &+x_1(\mathbf{e}_2 \otimes \mathbf{e}_3 + \mathbf{e}_3 \otimes \mathbf{e}_2)]\,\mathbf{e}_3 = \mu\alpha(-x_2, x_1, 0). \end{aligned} \tag{4.100}$$

We know that the resultant moment of the stress on each basis equals the torque:

$$\begin{aligned} M_3\ \mathbf{e}_3 &= \int_{S_1} (x_1, x_2, 0) \times \mu\ \alpha(-x_2, x_1, 0)\ ds \\ &= \mu\ \alpha \int_{S_1} (x_1^2 + x_2^2)\ ds\ \mathbf{e}_3 = \mu\ \alpha\ J_0\ \mathbf{e}_3, \end{aligned} \tag{4.101}$$

with J_0 the polar moment of inertia of the section; for the circle,

$$J_0 = \frac{\pi R^4}{2} \tag{4.102}$$

hence

$$M_3 = \frac{\pi R^4}{2} \mu\ \alpha \tag{4.103}$$

and

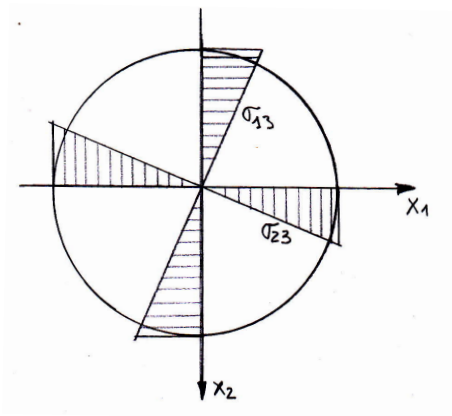

Figure 4.7: Stress in a twisted circular section.

$$\alpha = \frac{M_3}{\mu\ J_0}. \tag{4.104}$$

The torsion angle is hence proportional to the torque; the quantity $\mu\ J_0$ is the *torsional stiffness* of the beam. Finally, we get

$$\sigma_{13} = -\frac{M_3\ x_2}{J_0}, \quad \sigma_{23} = \frac{M_3\ x_1}{J_0}, \tag{4.105}$$

formulae algebraically similar to that of Navier, eq. (4.43): the material is mostly stressed near the boundary and of course, for the central symmetry of the circular section, these values are those of the stress on any couple of orthogonal diameters, see Fig. 4.7. Hence, more generally, we can wrote that on any diameter the tangential stress τ varies with the distance r from the center like

$$\tau = \frac{M_3\ r}{J_0} = \frac{2M_3 r}{\pi\ R^4} \ \rightarrow\ \tau_{max} = \frac{2M_3}{\pi\ R^3}. \tag{4.106}$$

4.9.2 Sections of any shape

Let us consider now a cross section of any shape, different from the circular one. The displacement field $\mathbf{u}$ cannot be of the type used for the circle, because the boundary conditions on S_l should not be satisfied. In fact, for a general section we have, see Fig. 4.8,

$$\mathbf{n}_l = \left(-\frac{dx_2}{d\ell}, \frac{dx_1}{d\ell}, 0\right) \tag{4.107}$$

so with the solution valid for the circular section we should obtain

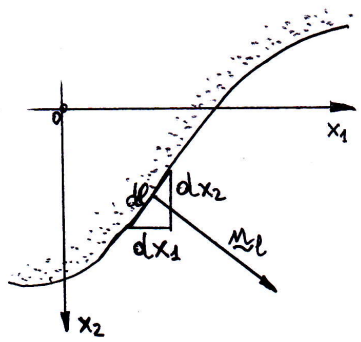

Figure 4.8: Outward normal $\mathbf{n}_l$ in a generally shaped section.

$$\boldsymbol{\sigma}\ \mathbf{n}_l = \mu\ \alpha \left(0, 0, x_1 \frac{dx_1}{d\ell} + x_2 \frac{dx_2}{d\ell}\right) = \mathbf{o}\ \rightarrow\ x_1 dx_1 + x_2 dx_2 = 0, \tag{4.108}$$

which is the differential equation of a family of circles: the circular section is the only one compatible with the state of stress (4.97).

We then pose

$$\begin{aligned} u_1 &= -\alpha\ x_2 x_3, \\ u_2 &= \alpha\ x_1 x_3, \\ u_3 &= \alpha\ \varphi(x_1, x_2), \end{aligned} \tag{4.109}$$

with $\varphi(x_1, x_2)$ the *warping function*, so called because it describes the warping, i.e. the antiplane deformation, of the cross section. Then

$$\begin{aligned} \boldsymbol{\varepsilon} = \frac{\nabla \mathbf{u} + \nabla^\top \mathbf{u}}{2} = \frac{\alpha}{2} &\left[(-x_2 + \varphi_{,1})(\mathbf{e}_1 \otimes \mathbf{e}_3 + \mathbf{e}_3 \otimes \mathbf{e}_1)\right. \\ &\left. +(x_1 + \varphi_{,2})(\mathbf{e}_2 \otimes \mathbf{e}_3 + \mathbf{e}_3 \otimes \mathbf{e}_2)\right], \end{aligned} \tag{4.110}$$

or in matrix form

$$\boldsymbol{\varepsilon} = \frac{\alpha}{2} \begin{bmatrix} 0 & 0 & -x_2 + \varphi_{,1} \\ 0 & 0 & x_1 + \varphi_{,2} \\ -x_2 + \varphi_{,1} & x_1 + \varphi_{,2} & 0 \end{bmatrix}; \tag{4.111}$$

because it is again $\mathrm{tr}\boldsymbol{\varepsilon} = 0$, the deformation is still isochoric. The Lamé's equations give the stress:

$$\begin{aligned} \boldsymbol{\sigma} = 2\mu\boldsymbol{\varepsilon} + \lambda \mathrm{tr}\boldsymbol{\varepsilon}\ \mathbf{I} = \mu\alpha[&(-x_2 + \varphi_{,1})(\mathbf{e}_1 \otimes \mathbf{e}_3 + \mathbf{e}_3 \otimes \mathbf{e}_1) \\ &+ (x_1 + \varphi_{,2})(\mathbf{e}_2 \otimes \mathbf{e}_3 + \mathbf{e}_3 \otimes \mathbf{e}_2)], \end{aligned} \tag{4.112}$$

or in matrix form

$$\boldsymbol{\sigma} = \mu\alpha \begin{bmatrix} 0 & 0 & -x_2 + \varphi_{,1} \\ 0 & 0 & x_1 + \varphi_{,2} \\ -x_2 + \varphi_{,1} & x_1 + \varphi_{,2} & 0 \end{bmatrix}. \tag{4.113}$$

The equilibrium equations are

$$\sigma_{13,3} = 0, \quad \sigma_{23,3} = 0, \quad \sigma_{13,1} + \sigma_{23,2} + \sigma_{33,3} = 0; \tag{4.114}$$

the first two equations are identically satisfied, while the last one gives

$$\varphi_{,11} + \varphi_{,22} = 0 \ \rightarrow \ \Delta\varphi = 0; \tag{4.115}$$

hence, $\varphi(x_1, x_2)$ must be a harmonic function.

On the boundary S_l, $\mathbf{n}_l = (n_1, n_2, 0)$ and we have

$$\boldsymbol{\sigma}\ \mathbf{n}_l = \mu\ \alpha\,(0, 0, \sigma_{13}n_1 + \sigma_{23}n_2) = \mathbf{o}, \tag{4.116}$$

which gives the equation

$$\sigma_{13}n_1 + \sigma_{23}n_2 = 0 \ \rightarrow \ \varphi_{,1}n_1 + \varphi_{,2}n_2 = x_2n_1 - x_1n_2. \tag{4.117}$$

The quantity at the first member is the derivative of φ along $\mathbf{n}_l$, while that at the second member is a known quantity $\forall p \in \partial S$, see Fig. 4.9:

$$\mathbf{n}_l \times (p - o) = (n_1, n_2, 0) \times (x_1, x_2, 0) = (0, 0, \xi), \tag{4.118}$$

with

$$\xi(x_1, x_2) = x_2n_1 - x_1n_2. \tag{4.119}$$

So, finding $\varphi(x_1, x_2)$ corresponds to solve the following Neumann problem:

$$\begin{cases} \Delta\varphi(x_1, x_2) = 0 \ \text{ in } S, \\ \dfrac{d\varphi}{d\mathbf{n}_l} = \xi(x_1, x_2) \ \text{ on } \partial S, \end{cases} \tag{4.120}$$

with $\xi(x_1, x_2)$ a known function $\forall p \in \partial S$ and depending on the shape of S. The solution depends hence on the shape of the cross section S.

The existence of a solution to this problem is guaranteed if

$$\oint_{\partial S} \frac{d\varphi}{d\mathbf{n}_l} d\ell = 0, \tag{4.121}$$

which is the case here:

$$\oint_{\partial S} \frac{d\varphi}{d\mathbf{n}_l} d\ell = \oint_{\partial S} (x_2n_1 - x_1n_2)\ d\ell = \oint_{\partial S} (x_1dx_1 + x_2dx_2) = 0 \tag{4.122}$$

because the integrand is the exact differential of $(x_1^2 + x_2^2)/2$+const.

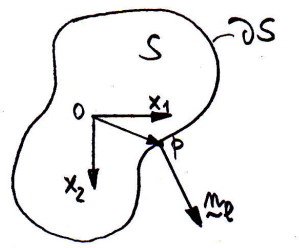

Figure 4.9: Torsion of a generally shaped section.

The resultants of the stresses σ_{13} and σ_{23} on each section are still null, as it must be; in fact, because $\varphi(x_1, x_2)$ is harmonic, for the Gauss theorem and for the boundary condition on ∂S, we get

$$\begin{aligned}\int_S \sigma_{13}\ ds &= \mu\ \alpha \int_S -x_2 + \varphi_{,1}\ ds \\ &= \mu\ \alpha \int_S [x_1(\varphi_{,1} - x_2)]_{,1} + [x_1(\varphi_{,2} + x_1)]_{,2}\ ds \\ &= \oint_{\partial S} x_1 \left(\frac{d\varphi}{d\mathbf{n}_l} - x_2 n_1 + x_1 n_2 \right)\ d\ell = 0.\end{aligned} \tag{4.123}$$

A similar proof can be given for σ_{23}. For the resultant moment, we get

$$M_3 = \int_S (p - o) \times (\sigma_{13}, \sigma_{23}, 0)\ ds = \mu\ \alpha \int_S (x_1^2 + x_2^2 + x_1\varphi_{,2} - x_2\varphi_{,1})\ ds. \tag{4.124}$$

We put

$$\frac{J_0}{q} := \int_S (x_1^2 + x_2^2 + x_1\varphi_{,2} - x_2\varphi_{,1})\ ds \tag{4.125}$$

where

$$q = \frac{J_0}{J_0 + \int_S (x_1\varphi_{,2} - x_2\varphi_{,1})\ ds} \tag{4.126}$$

is the *torsion factor*. Finally, we get

$$M_3 = \mu\ \alpha \frac{J_0}{q} \tag{4.127}$$

and hence

$$\alpha = \frac{q\ M_3}{\mu\ J_0}. \tag{4.128}$$

The quantity $\mu\ J_0/q$ is the *torsional stiffness* of the section. So, what has changed with respect to the circular case is the calculation of the torsional stiffness, now affected by the torsion factor. It can be proved that q is always greater than 1, and, as it can be easily recognized, it is equal to 1 only for the circular section. This means that, the torsion angle α is smaller for a circular section than for any other section sharing the same polar moment of inertia and made of the same material: the circular section is the stiffest one for torsion.

All the problem is reduced to find, for a given section, the warping function $\varphi(x_1, x_2)$. This is not possible, in general: only some few solutions are known. Numerical approaches and approximated solutions are hence to be used.

4.9.3 The Bredt's approximate solution

The most famous approximate solution is that of Bredt (1896) for thin-walled hollow sections, see Fig. 4.10. We know that on the boundary of the section, ∂S, the traction is null and that the tangential stress vector $\boldsymbol{\tau}$, defined in eq. (4.12), is parallel to ∂S.

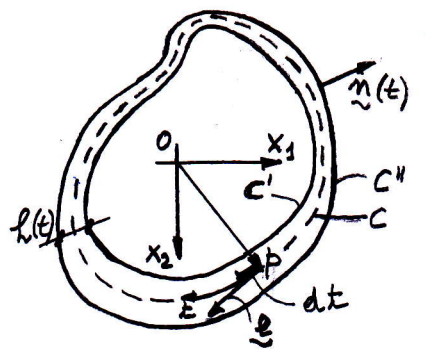

Figure 4.10: General scheme for the Bredt's solution.

The first hypothesis of Bredt is that $\boldsymbol{\tau}$ is parallel to the midline C $\forall t$, see Fig. 4.10 (t is a curvilinear abscissa chosen arbitrarily along the midline C). Then, because the section is thin-walled, the thickness $h(t)$ is much smaller than the characteristic dimension d of the cross section, e.g. $d = \sup\{\text{chords}\}$, we can assume that $\boldsymbol{\tau}$ is practically constant over the thickness $h(t)$ $\forall t$: this is the second hypothesis of Bredt.

The consequence of these hypotheses is that

$$\tau(t)\ h(t) = const. \tag{4.129}$$

In fact, isolating a slice of wall of the cross section, Fig. 4.11, for the equilibrium it must be

$$\tau_1\ h_1\ dx_3 = \tau_2\ h_2\ dx_3 \ \Rightarrow\ \tau\ h = const. \tag{4.130}$$

This is analogous to what happens in hydrodynamics: the flux is constant for permanent flows. We can now calculate τ, the norm of $\boldsymbol{\tau}$:

$$M_3\mathbf{e}_3 = \oint_C (p-o)\times\boldsymbol{\tau}\ h\ dt = \tau\ h \oint_C (p-o)\times\mathbf{e}\ dt, \tag{4.131}$$

because of eq. (4.129); $\mathbf{e}$ is the unit vector tangent to the midline C. Hence, the term $(p-o)\times\mathbf{e}$ is the area of the parallelogram defined, $\forall p$, by the vectors $(p-o)$ and $\mathbf{e}$. Hence,

$$\oint_C (p-o)\times\mathbf{e}\ dt = 2\Omega\ \mathbf{e}_3, \tag{4.132}$$

with Ω the area of the surface surrounded by C; then

$$M_3\mathbf{e}_3 = 2\tau\ h\ \Omega\ \mathbf{e}_3 \tag{4.133}$$

so finally we obtain the *first formula of Bredt*:

$$\tau = \frac{M_3}{2\Omega\ h}. \tag{4.134}$$

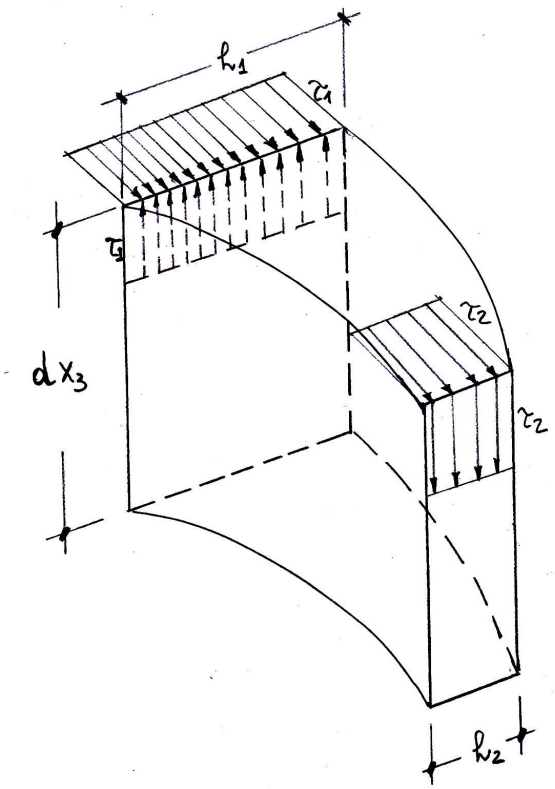

Figure 4.11: Scheme of the tangential stress for the Bredt's solution.

This simple, approximate solution fulfills, in the mean $\forall h(t)$, only the equilibrium equations, not the compatibility ones; it is based upon merely static considerations, i.e. on equilibrium, and also the constitutive law is not used for it, which is hence valid also for non-elastic materials. Nevertheless, it gives good results for small $h(t)$ and shows that, just like the speed of water increases when the section decreases, so the tangential stress τ increases when the wall thickness $h(t)$ decreases.

Through the PVD it is also possible to compute the rotation θ of a cross section: for the situation in Fig. 4.12 it is:

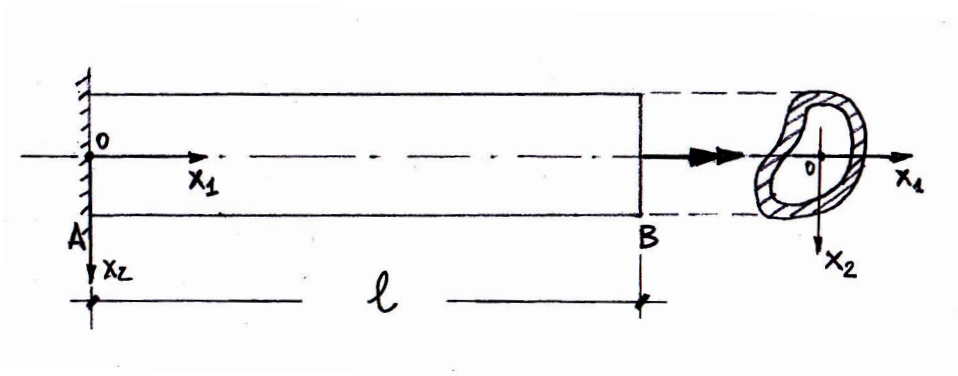

Figure 4.12: Scheme for the calculation of the twist angle with the Bredt's solution.

- virtual work of the external actions: $M_B \delta\theta$;

- virtual work of the internal actions: $\int_V \boldsymbol{\sigma} \cdot \delta\boldsymbol{\varepsilon}\ dv$.

We take as virtual displacements and strains the actual ones: $\delta\theta = \theta_B$ and $\delta\boldsymbol{\varepsilon} = \boldsymbol{\varepsilon}$. So, for the inverse Lamé's equations we get

$$M_B\ \theta_B = 2\int_V (\sigma_{13}\ \varepsilon_{13} + \sigma_{23}\ \varepsilon_{23})\ dv = \frac{1}{\mu}\int_V (\sigma_{13}^2 + \sigma_{23}^2)\ dv. \tag{4.135}$$

But

$$\sigma_{13}^2 + \sigma_{23}^2 = \tau^2 \tag{4.136}$$

and τ does not depend upon x_3; hence, indicating with ℓ the length of the midline C,

$$M_B\ \theta_B = \frac{\ell}{\mu}\int_S \tau^2\ ds = \frac{\ell}{\mu}\oint_C \tau^2\ h\ dt = \frac{\ell}{\mu}\left(\frac{M_B}{2\Omega}\right)^2 \oint_C \frac{h}{h^2}\ dt, \tag{4.137}$$

so finally

$$\theta_B = \frac{M_B \ell}{4\mu\Omega^2}\oint_C \frac{1}{h}\ dt. \tag{4.138}$$

The quantity

$$\frac{1}{4\mu\Omega^2}\oint_C \frac{1}{h}\ dt. \tag{4.139}$$

is purely geometric and it is often put in the form

$$\frac{1}{4\mu\Omega^2}\oint_C \frac{1}{h}\ dt := \frac{q}{J_0}, \tag{4.140}$$

with q the torsion factor and J_0 the polar moment of inertia. Finally,

$$\theta_B = q\frac{M_B\ \ell}{\mu\ J_0}. \tag{4.141}$$

As a final remark, we notice that all the results concerning torsion apply only to compact shapes. Thin-walled open sections, in particular, cannot be treated in this way. This topic is beyond the scope of this text and the reader is addressed to the classical literature on beams theory.

4.10 Shear

We come now to examine the last case, that of shear. We must immediately specify that pure shear is not possible: shear is always joint to bending, because, for the equilibrium, the presence of a shear force at an end of the beam produces always a bending moment (that is why the case of bending examined in sect. 4.8, where the bending of the beam is produced uniquely by couples applied at the ends of the beam, is sometimes called *pure bending*).

In this case, the beam is loaded on the end S_0 by the shear

$$\mathbf{T}_0 = F_1\ \mathbf{e}_1 + F_2\ \mathbf{e}_2. \tag{4.142}$$

The applied forces F_1 and F_2 coincide with the value of the two shear forces T_1 and T_2 for $x_3 = 0$, so we will simply indicate them as such, as usually done in the literature.

Like in the case of bending, we examine separately the two shears T_1 and T_2 and after we will use the Principle of Superposition of the Effects. Let then us start with T_2, see Fig. 4.13.

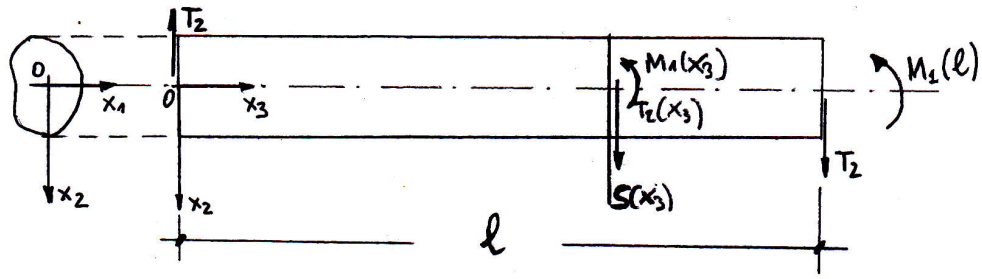

Figure 4.13: Scheme for the analysis of the shear.

For the equilibrium of the part of beam between S_0 and $S(x_3)$ we have that

$$T_2(x_3) = T_2, \quad M_1(x_3) = T_2\ x_3. \tag{4.143}$$

Hence, $M_1(x_3)$ is not constant along the axis of the beam and, as anticipated, it is not possible the existence of shear without bending. Nevertheless, still using the superposition of the effects, we ignore the presence of $M_1(x_3)$ and examine only the effects of T_2.

The rigorous analysis of shear is very cumbersome, and beyond the scope of this text. Fortunately, an approximate solution, satisfying, like the Bredt's solution, only to equilibrium, is rather easy to be found. We can roughly justify the use of an approximate solution by the following consideration: for beams with $\ell \gg d$, like in the Saint-Venant problem, bending largely dominates over shear, in terms of stresses and deformations. Let us show this by a rough computation: for a beam of rectangular section, $b \times h$, subjected to shear, in correspondence to the most solicited section, $x_3 = \ell$, bending produces the highest stress

$$\sigma_{33} = \frac{M_1\ x_2^{max}}{J_1} = \frac{6T_2\ \ell}{b\ h^2}. \tag{4.144}$$

For the shear stress σ_{23}, let us assume the rude approximation of uniform stress on the cross section (inadmissible, because it violates the result that stress must be tangential to the border of the section), which gives

$$\sigma_{23} = \frac{T_2}{b\ h}, \tag{4.145}$$

so that

$$\frac{\sigma_{33}}{\sigma_{23}} = \frac{6\ell}{h} \tag{4.146}$$

and because $\ell \gg h$, then $\sigma_{33} \gg \sigma_{23}$. It is is then sufficient an approximate evaluation of the shear effects, because they are always much smaller than those of bending, in the Saint-Venant problem.

The approximate solution for shear is due to Jourawski (1856); the first assumption is that the cross section is symmetric with respect to the shear axis (in this case, the axis x_2). The second assumption concerns the distribution of σ_{23}: Jourawski assumes that it is constant on each horizontal chord, i.e. that σ_{23} is independent from x_1:

$$\sigma_{23} = \sigma_{23}(x_2, x_3). \tag{4.147}$$

This assumption violates the fundamental result of the Saint-Venant problem: tractions are tangential to the border of the cross section. Then, a third hypothesis is made: on the border of the section we assume that

$$\sigma_{13} = \sigma_{23} \ \tan\alpha, \tag{4.148}$$

with α the angle between σ_{23} and the tangent to the border, see Fig. 4.14 a). In this way, the equilibrium on the border is satisfied.

We need a fourth hypothesis, about the variation of σ_{13} along a horizontal chord: we admit a linear variation between the two ends of a chord, see Fig. 4.14 b):

$$\sigma_{13} = \sigma_{23} \ \tan\alpha \ \frac{x_1}{\eta}, \tag{4.149}$$

with $\eta(x_2)$ the length of half a chord.

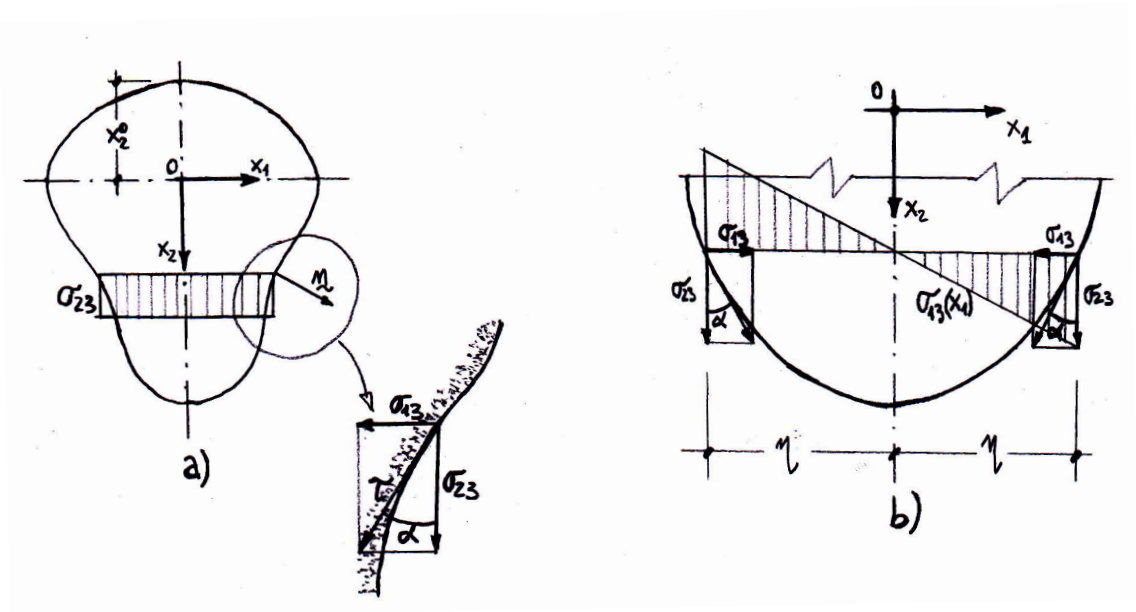

Figure 4.14: The shear stresses in the Jourawski solution.

The stress components must be equilibrated, in particular they must satisfy the third equilibrium equation of Cauchy:

$$\sigma_{13,1} + \sigma_{23,2} + \sigma_{33,3} = 0. \tag{4.150}$$

The Naviers's formula gives us

$$\sigma_{33} = \frac{M_1 x_2}{J_1} = \frac{T_2 x_2 x_3}{J_1}, \tag{4.151}$$

so injecting it, along with eq. (4.149), into eq. (4.150) we obtain

$$\left(\sigma_{23}\tan\alpha\frac{x_1}{\eta}\right)_{,1}+\sigma_{23,2}+\left(\frac{T_2x_2x_3}{J_1}\right)_{,3}=0. \tag{4.152}$$

But σ_{23} does not depend upon x_1, while

$$\tan\alpha=\frac{d\eta(x_2)}{dx_2}, \tag{4.153}$$

so we have

$$\begin{aligned}&\sigma_{23}\frac{d\eta}{dx_2}\frac{1}{\eta}+\sigma_{23,2}+\frac{T_2x_2}{J_1}=0\ \rightarrow\ \sigma_{23}\frac{d\eta}{dx_2}+\eta\frac{\sigma_{23}}{dx_2}=-\eta\frac{T_2x_2}{J_1}\ \rightarrow\\&\frac{d(\eta\sigma_{23})}{dx_2}=-\eta\frac{T_2x_2}{J_1}\ \rightarrow\ d(\eta\sigma_{23})=-\eta\frac{T_2x_2}{J_1}dx_2.\end{aligned} \tag{4.154}$$

We integrate now between $-x_2^o$, upper limit of the cross section, and the position x_2 of the actual chord, upon which we want to determine σ_{23}:

$$\int_{-x_2^0}^{x_2}d(\eta\sigma_{23})=-\int_{-x_2^0}^{x_2}\eta\frac{T_2x_2}{J_1}\,dx_2\ \rightarrow\ \sigma_{23}=-\frac{1}{2\eta}\frac{T_2}{J_1}\int_{-x_2^0}^{x_2}2\eta\ x_2\ dx_2. \tag{4.155}$$

The last integral in the equation above is just the opposite of the static moment $\mathcal{S}$, with respect to the axis x_1, of the portion of the cross section between the upper limit and the chord at x_2. So finally, calling $b=2\eta$ the length of the chord we get the *Jourawski's formula*:

$$\sigma_{23}=\frac{T_2\mathcal{S}}{b\ J_1}. \tag{4.156}$$

Generally speaking, this solution does not satisfy the Beltrami-Michell compatibility equations. Nevertheless, it can be checked that for the case of rectangular sections, the Beltrami-Michell equations are satisfied. So, for the Kirchhoff theorem, the Jourawski's solution is the correct one, for rectangular sections.

4.11 Yielding

The results of the Saint-Venant Problem let us calculate the state of stress at any point of a beam. Generalizing these results to more general cases (presence of body forces, variable section, forces on S_l etc.) is customary and supported by the results of experience.

The knowledge of $\boldsymbol{\sigma}$ allows for verifying the safety of the beam. This can be done if a *yielding criterion* is specified. A yielding criterion defines a limit condition, usually stating the transition from a reversible, elastic state to an irreversible one. Such a criterion is needed to transform the set of the σ_{ij} to a unique *equivalent stress*, according to the criterion, to be compared to the *admissible strength*, measured by, normally, tensile tests on the material composing the structure.

The very question is hence the choice of the yielding criterion. To give a detailed account of the different yielding criteria existing in the literature is far beyond the scope of this

text, so we restrict ourselves to the most popular among the criteria for isotropic elastic materials: the *Huber-Hencky-Von Mises criterion* (in short HHVM).

According to this criterion, yielding is attained when the deviatoric elastic energy (see Ex. 2, Chapt. 3):

$$U_d = \frac{1}{2}\boldsymbol{\sigma}_d \cdot \boldsymbol{\varepsilon}_d \tag{4.157}$$

reaches a critical value. Generally speaking, it is easy to show that

$$\begin{aligned} U_d &= \frac{1}{4\mu}\boldsymbol{\sigma}_d \cdot \boldsymbol{\sigma}_d = \frac{1}{4\mu}\left(\boldsymbol{\sigma} - \frac{1}{3}\mathrm{tr}\boldsymbol{\sigma}\ \mathbf{I}\right) \cdot \left(\boldsymbol{\sigma} - \frac{1}{3}\mathrm{tr}\boldsymbol{\sigma}\ \mathbf{I}\right) = \frac{1}{12\mu}(3\mathrm{tr}\boldsymbol{\sigma}^2 - \mathrm{tr}^2\boldsymbol{\sigma}) \\ &= \frac{1}{6\mu}[\sigma_{11}^2 + \sigma_{22}^2 + \sigma_{33}^2 - \sigma_{11}\sigma_{22} - \sigma_{11}\sigma_{33} - \sigma_{22}\sigma_{33} + 3(\sigma_{12}^2 + \sigma_{13}^2 + \sigma_{23}^2)]. \end{aligned} \tag{4.158}$$

With the principal stresses, one gets

$$\begin{aligned} U_d &= \frac{1}{6\mu}[\sigma_1^2 + \sigma_2^2 + \sigma_3^2 - \sigma_1\sigma_2 - \sigma_1\sigma_3 - \sigma_2\sigma_3] \\ &= \frac{1}{4\mu}[(\sigma_1 - p)^2 + (\sigma_2 - p)^2 + (\sigma_3 - p)^2], \quad p = \frac{1}{3}\mathrm{tr}\boldsymbol{\sigma}. \end{aligned} \tag{4.159}$$

The limit condition is hence

$$U_d \leq k_0, \tag{4.160}$$

with k_0 an experimentally determined value.

For the case of a tensile stress, the one existing in the unidirectional traction test normally used for characterizing the strength of isotropic materials, say

$$\boldsymbol{\sigma} = \sigma_1(\mathbf{e}_1 \otimes \mathbf{e}_1), \tag{4.161}$$

it is

$$U_d = \frac{1}{4\mu}\left[\left(\sigma_1 - \frac{\sigma_1}{3}\right)^2 + \frac{2}{9}\sigma_1^2\right] = \frac{1}{6\mu}\sigma_1^2. \tag{4.162}$$

So, at the limit state, when σ_1 reaches the value of the yielding stress, σ_0, we have

$$k_0 = \frac{1}{6\mu}\sigma_0^2. \tag{4.163}$$

The limit condition of the HHVM criterion is hence

$$\sigma_{eq} = \sqrt{\sigma_{11}^2 + \sigma_{22}^2 + \sigma_{33}^2 - \sigma_{11}\sigma_{22} - \sigma_{11}\sigma_{33} - \sigma_{22}\sigma_{33} + 3(\sigma_{12}^2 + \sigma_{13}^2 + \sigma_{23}^2)} \leq \sigma_0, \tag{4.164}$$

or with the principal stresses

$$\sigma_{eq} = \sqrt{\sigma_1^2 + \sigma_2^2 + \sigma_3^2 - \sigma_1\sigma_2 - \sigma_1\sigma_3 - \sigma_2\sigma_3} \leq \sigma_0. \tag{4.165}$$

For the case of the Saint-Venant Problem, $\sigma_{11} = \sigma_{22} = \sigma_{12} = 0$ everywhere in the beam, so the criterion reduces to

$$\sigma_{eq} = \sqrt{\sigma_{33}^2 + 3(\sigma_{13}^2 + \sigma_{23}^2)} \leq \sigma_0 \tag{4.166}$$

and remembering that the norm τ of the tangential stress $\boldsymbol{\tau}$, eq. (4.12), is

$$\tau = \sqrt{\sigma_{13}^2 + \sigma_{23}^2} \tag{4.167}$$

we finally obtain the well known formula

$$\sigma_{eq} = \sqrt{\sigma_{33}^2 + 3\tau^2} \leq \sigma_0, \tag{4.168}$$

which is normally used for checking the safety of metallic beams. The term σ_{eq} is often called the *Von Mises (equivalent) stress.*

4.12 Exercises

1. Use the representation theorem for rotations

$$\mathbf{R} = \mathbf{I} + \sin\alpha\ \mathbf{W} + (1 - \cos\alpha)\mathbf{W}^2,$$

   with $\mathbf{W}$ the axial tensor of the rotation axis and α the amplitude of the rotation, to show that the displacement field of the torsion for a circular section is the one given in eq. (4.93).

2. Prove that the solution for the torsion of circular bars is valid also for a circular pipe; what does it change in the formula for the tangential stress τ?

3. Prove that the choice of the origin of the axes, o, is immaterial for the case of torsion.

4. Show that the exact solution for the torsion of an elliptical section of equation

$$\frac{x_1^2}{a^2} + \frac{x_2^2}{b^2} = 1$$

   is given by the warping function

$$\varphi = -\frac{a^2 - b^2}{a^2 + b^2} x_1 x_2$$

   and develop the expression for the tangential stress τ and for the torsion factor q.

5. A bar is stretched by an axial force F. If the cross section area is A which is the highest shear and on which elements of surface does it act upon?

6. A beam of cross section area A is stretched by a force F and its lateral contraction is blocked. Show that the effective Young's modulus is

$$E' = \frac{1 - \nu}{(1 - 2\nu)(1 + \nu)} E$$

   and determine the highest shear and the surface element where it acts upon.

7. Show that the strain energy stored in a beam stretched by a load p uniformly distributed over the end sections is, for unit volume,

$$U = U_s + U_d \quad \text{with} \quad U_s = \frac{p^2}{18\kappa}, \quad U_d = \frac{p^2}{6\mu}$$

and express the ratio U_d/U_s. What happens to this ratio when the Poisson's coefficient varies from -1 to $1/2$? Finally, calculate U as a function of $N = pA$, E and ν.

8. Show that for a cylindrical shaft acted upon by a torque M_3 it is

$$U_s = 0, \quad U_d = \frac{\tau^2}{2\mu}$$

and calculate the whole energy stored in a beam of length ℓ, as a function of M_3, using the theorem of Clapeyron.

9. Show that for a beam bent by end couples M_1 it is

$$U_s = \frac{1}{18\kappa}\frac{M_1^2 x_2^2}{J_1^2}, \quad U_d = \frac{1}{6\mu}\frac{M_1^2 x_2^2}{J_1^2}.$$

Then, express U as a function of E and determine the whole strain energy stored in a beam of length ℓ. Find this same last result using the theorem of Clapeyron.

10. For a beam acted upon by a shear force T_2 on S_0 show that, for the only stress field associated to T_2 and not to the related bending, it is

$$U_s = 0, \quad U_d = \frac{1}{2\mu}\left(\frac{T_2\mathcal{S}}{b\ J_1}\right)^2\left(1 + \frac{4\tan^2\alpha\ x_1^2}{b^2}\right).$$

Calculate then the whole energy stored in a beam of length ℓ and show that it can be put in the form

$$U_T^{tot} = \chi\frac{T_2^2\ell}{2GA},$$

where χ is a numerical coefficient called the *shear factor*, depending upon the cross section shape, to be specified.

11. Still for the case of the previous exercise, show that the whole energy stored in the beam for the bending associated to the shear force is

$$U_M^{tot} = \frac{T_2^2\ell^3}{6EJ_1}.$$

12. Considering the results of the last two exercices, express the ratio

$$\gamma = \frac{U_T^{tot}}{U_M^{tot}}$$

as function of the slenderness of the rod

$$\lambda_r = \frac{\ell}{\rho}$$

where

$$\rho = \sqrt{\frac{J_1}{A}}$$

is the radius of gyration of the cross section of the rod. What consequences can be drawn?

13. Examine the case of a rectangular cross section submitted to the shear T_2; find the distribution of σ_{13} and σ_{23} over the section, the maximum value of the tangential stress and the shear factor.

14. Using the results of the last two exercices, express the ratio λ_r for a rod with rectangular section.

15. Study the stress state on a circular section submitted to a pure shear.

16. Determine the tangential stress τ at any point of a square hollow section submitted to a shear T and a torque M_T.

17. Determine the stress variation on a I-shaped section submitted to a shear along the vertical flange.

18. A I-shaped section is submitted to a moment M_1 and a shear force T_2. Calculate the Von Mises equivalent stress in the critical points of the section.

19. A rectangular section is submitted to an axial force N and a bending moment M. Determine the variation of σ_{33} on the section and the position of the neutral axis. Then, examine the same problem reducing the actions to a unique axial force applied with an eccentricity e to be determined. For which values of e the stress σ_{33} over the section does not change of sign?

20. Imagine that in the case of the previous exercise the material cannot withstand tensile stresses, like in a simple contact problem. Consider the case of a compressive axial force N and study what happens in the section for any possible value of the eccentricity e.

21. Consider a section of the form in the figure; it is submitted to a shear T_2 applied along the axis x_2. Determine the shear stress at any point of the cross section and prove that T_2 can produce a torsion on the section unless it is applied at a point C_S, the *shear center*, that will be determined.

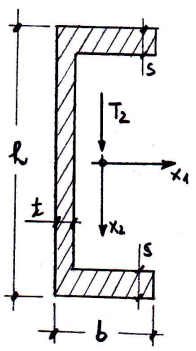

22. A section of steel with section I as in the figure is submitted to a shear force T_2 and a bending moment M_1. Knowing the yielding stress σ_0, determine if the section

can withstand the applied actions using the HHVM criterion. Data: $h = 400$ mm, $t = 12$ mm, $e = 8$ mm, $b = 200$ mm, $T_2 = 2000$ KN, $M_1 = 50$ KNm, $\sigma_0 = 160$ MPa.

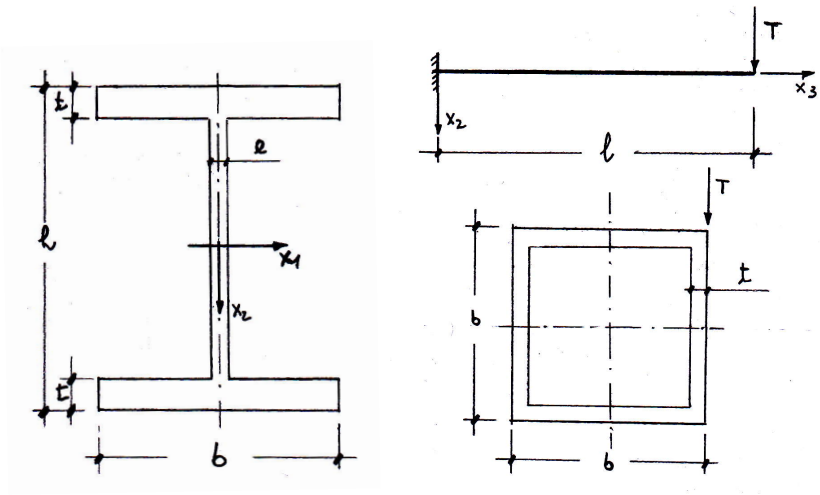

23. Calculate the stress state for the beam in the figure, having a hollows square section. Then, check the safety of the structure using the HHVM criterion, knowing that the limit stress is σ_0. Data: $T = 4$ KN, $b = 200$ mm, $t = 6$ mm, $\ell = 4$ m, $\sigma_0 = 160$ MPa.

24. Check the safety of the structure in the figure with the HHVM criterion. Data: $\ell = 6$ m, $d = 2$ m, $N = 2$ KN, $T = 3$ KN, $M = 8$ KN, $h = 200$ mm, $b = 80$ mm, $t = 8$ mm, $e = 4$ mm, $\sigma_0 = 160$ MPa.

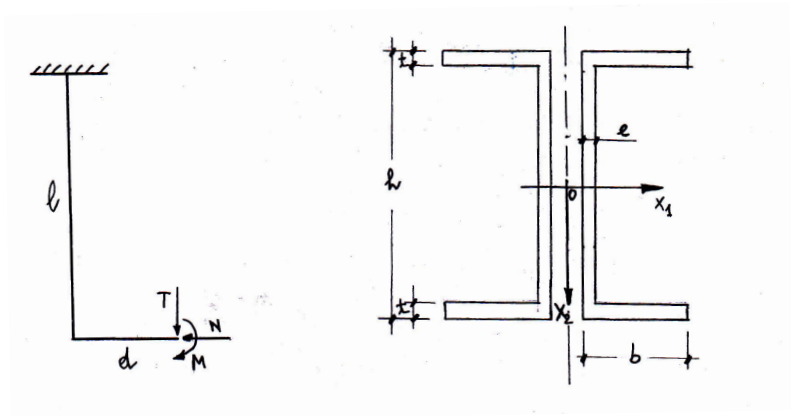

Chapter 5

Rod theories

5.1 Introduction

The results of the Saint-Venant Problem greatly simplify the study of beams. In fact, the whole stress state at any point of the beam can be found if the internal actions, N, T_1, T_2, M_1, M_2 and M_3 are known.

The problem of the study of structures composed by beams is hence reduced to the study of the internal actions. These ones depend only upon the position along the beam axis, say the axis z. So the equations concerning N, T_1 etc. can be only ordinary differential equations (ODEs), not partial differential equations (PDEs), which simplifies considerably the problem and motivates for the study of beams reduced, ideally, to their axis.

Such theories, idealizing a beam as a one-dimensional element, are called *rod theories* (a rod is considered here to be a beam reduced to its only axis). The objective of the rod theories is hence to provide balance, compatibility and constitutive equations for rods, i.e. for this special type of continuum.

5.2 Plane rods

In many practical cases, rods belong to a plane that contains one of their principal axes of inertia of the cross section and are acted upon by loads that belong to such a plane. This is the case of *plane rods*: the rods belong, also after the deformation, to their original plane, where the loads act.

The case of plane rods is much simpler than the general one, because the only possible internal actions reduce to only N, T_2 and M_1 (that we will indicate, in the following, simply by N, T and M, because there is no possibility of ambiguity in the plane case). In the remainder of this Chapter, we will focus on plane rods; nevertheless, it is not difficult to generalize the results of the plane case to the general three-dimensional one, following the same approach illustrated below for the plane case.

The objective is to write the balance, compatibility and constitutive equations for plane rods, to arrive to a mechanical model for such elements. We will, namely, introduce

two classical models of rods, the more general Timoshenko's one and the very classical Euler-Bernoulli rod model.

5.2.1 Balance equations

Let us begin the study of plane rods with the balance equations. The general situation is sketched in Fig. 5.1; loads $p(z)$ and $q(z)$ are the data of the problem. The balance equations can be obtained applying the principle of the sections of Euler to a piece of road between the positions z and $z + dz$. The assumed positive internal actions are those depicted in the figure. The equilibrium of the rod implies that of the segment under scrutiny, submitted to the external loads and to the internal actions transmitted to the segment by the rest of the rod through the end sections. The balance gives hence:

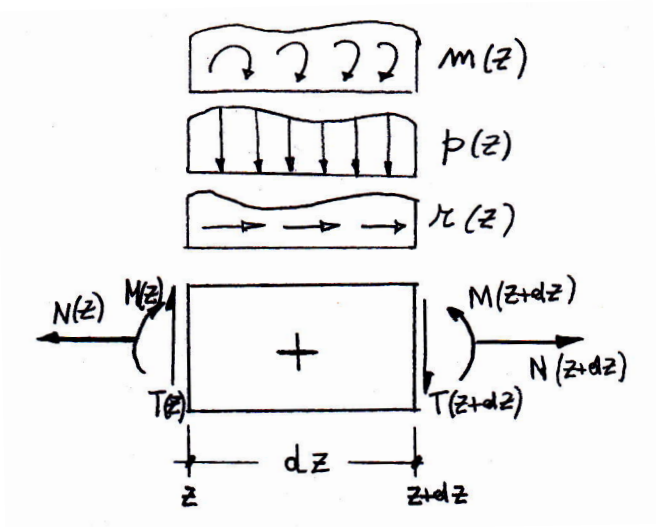

Figure 5.1: General sketch for the rod's balance equations.

- equilibrium to axial force:

$$N(z + dz) - N(z) + r(z)dz = 0; \tag{5.1}$$

- equilibrium to shear force:

$$T(z + dz) - T(z) + p(z)dz = 0; \tag{5.2}$$

- equilibrium to bending moment (e. g. around the point of abscissa z):

$$M(z + dz) - M(z) - T(z + dz)dz - p(z)\frac{dz^2}{2} - m(z)dz = 0. \tag{5.3}$$

Developing the above expressions gives

$$\begin{aligned}
&N(z) + \frac{dN(z)}{dz}dz - N(z) + r(z)dz = 0,\\
&T(z) + \frac{dT(z)}{dz}dz - T(z) + p(z)dz = 0,\\
&M(z) + \frac{dM(z)}{dz}dz - M(z) - T(z)dz - \frac{dT(z)}{dz}dz^2 - p(z)\frac{dz^2}{2} - m(z)dz = 0,
\end{aligned} \tag{5.4}$$

and neglecting the terms of order greater than the first we finally obtain the *balance equations for rods*:

$$\begin{aligned} \frac{dN}{dz} &= -r, \\ \frac{dT}{dz} &= -p, \\ \frac{dM}{dz} &= T + m. \end{aligned} \tag{5.5}$$

In the special and very common case of $m = 0$, we remark that T is the derivative of M. From the two last relations, we get also, by differentiation,

$$\frac{d^2M}{dz^2} = -p + \frac{dm}{dz}, \tag{5.6}$$

a second-order differential equilibrium equation relating directly the bending moment to the loads.

5.2.2 Compatibility equations

Let us now turn the attention on geometric considerations. In fact, we need a link, the *compatibility equations of the rods*, between the displacements of the rod and some internal kinematical quantities defining the deformation of the rod. The general situation is that sketched in Fig. 5.2, where w is the axial displacement, v the *deflexion*, i.e. the displacement along y, β is the local rotation of the axis z and φ that of the normal to the undeformed axis z.

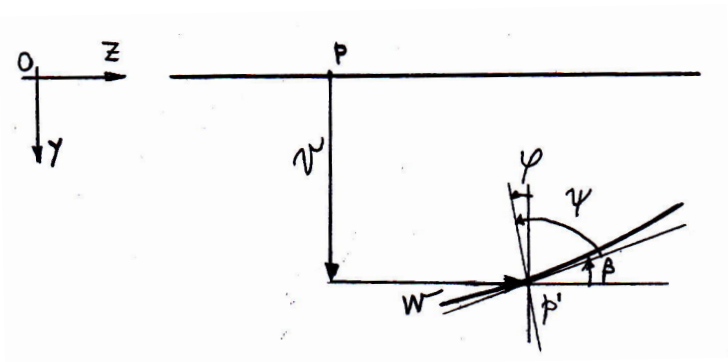

Figure 5.2: General scheme of the kinematics of a rod.

We introduce first the *extension* ε, the internal kinematical descriptor of the stretching of the axis z:

$$\varepsilon = \frac{dw}{dz}. \tag{5.7}$$

Then, we define the *curvature* κ of the rod

$$\kappa = -\frac{d\varphi}{dz}; \tag{5.8}$$

the sign $-$ is due to the fact that in the Saint-Venant Problem the positive bending moments are opposite to the positive concavity, see below.

Finally, we introduce the *angular sliding* or *shear* γ of the rod axis, describing how a segment initially parallel to the rod axis changes in the deformation:

$$\gamma = \beta - \varphi. \tag{5.9}$$

From fig. 5.2 we see that

$$\psi = \frac{\pi}{2} + \varphi - \beta \;\rightarrow\; \gamma = \beta - \varphi = \frac{\pi}{2} - \psi : \tag{5.10}$$

γ measures the variation of the angle existing between the axis and a segment orthogonal to it, from its initial value of $\pi/2$ to the final one of ψ. For small perturbations,

$$\tan\beta = \frac{dv}{dz} \simeq \beta, \tag{5.11}$$

so we have

$$\gamma = \frac{dv}{dz} - \varphi. \tag{5.12}$$

We remark that there is a substantial difference between a rod and a classical continuum: in the rod theories, derivatives of angular quantities appear: a rod is a *polar continuum*, i.e., unlike classical continuum bodies, it can transmit couples.

5.2.3 Constitutive equations

We have for the while only six equations, the balance, eq. (5.5), and the compatibility ones, eqs. (5.7), (5.8) and (5.12), for a set of 9 unknowns on the whole: $N, T, M, v, w, \varphi, \varepsilon, \kappa$ and γ. We need hence three *constitutive equations for the rods*; they can be derived using the results of the Saint-Venant Problem. The approach is energetic: we write first the strain energy for a beam, U_b, between the two sections 1 and 2:

$$\begin{aligned} U_b &= \frac{1}{2}\int_\Omega \boldsymbol{\sigma}\cdot\boldsymbol{\varepsilon}\; dv = \frac{1}{2}\int_\Omega \frac{\sigma_{33}^2}{E} + \frac{1}{\mu}(\sigma_{13}^2 + \sigma_{23}^2)\; dv \\ &= \frac{1}{2}\int_1^2\int_S \left(\frac{N}{A} + \frac{M\;y}{J}\right)^2 \frac{1}{E} + \frac{1}{\mu}\left(\frac{T\mathcal{S}}{b\;J_1}\right)^2 \left(1 + \frac{4\tan^2\alpha\;x^2}{b^2}\right) ds\; dz \\ &= \frac{1}{2}\int_1^2 \frac{N^2}{EA} + \frac{\chi T^2}{\mu A} + \frac{M^2}{EJ}\; dz. \end{aligned} \tag{5.13}$$

Now, thinking at the beam as a rod, we write the energy U_r:

$$U_r = \frac{1}{2}\int_1^2 (N\varepsilon + T\gamma + M\kappa)\; dz. \tag{5.14}$$

This result can be obtained applying the Clapeyron's theorem at the segment dx of the rod, considered as charged uniquely by the internal actions. Of course, the solid being the same, it must be

$$U_b = U_r \quad \forall N, T, M, \tag{5.15}$$

which gives the conditions

$$N\varepsilon = \frac{N^2}{EA}, \quad T\gamma = \frac{\chi T^2}{\mu A}, \quad M\kappa = \frac{M^2}{EJ}, \tag{5.16}$$

and finally the three constitutive equations for the rods:

$$\begin{aligned} N &= EA\varepsilon, \\ T &= \frac{\mu A}{\chi}\gamma, \\ M &= EJ\kappa. \end{aligned} \tag{5.17}$$

We remark that, because of the linearity of the problem, the internal actions are proportional to their corresponding kinematical parameter. We dispose now of all the equations for the rod theories.

5.2.4 The Timoshenko's rod

The compatibility equations can be injected into the constitutive equations to get (from now on, for the sake of shortness, we denote by a prime the derivative with respect to z):

$$\begin{aligned} N &= EAw', \\ T &= \frac{\mu A}{\chi}(v' - \varphi), \\ M &= -EJ\varphi'. \end{aligned} \tag{5.18}$$

If now we inject these equations into the balance equations, we get

$$\begin{aligned} &(EAw')' = -r, \\ &\left[\frac{\mu A}{\chi}(v' - \varphi)\right]' = -p, \\ &(-EJ\varphi')' = T + m = \frac{\mu A}{\chi}(v' - \varphi) + m. \end{aligned} \tag{5.19}$$

Equations (5.18) and (5.19) define the *Timoshenko's rod model*. In this model, any straight segment originally orthogonal to the rod axis remains straight after the deformation, but *not* necessarily orthogonal to the tangent of the deformed axis, because $\gamma \neq 0$, generally speaking, which implies that $v' \simeq \beta \neq \varphi$.

N and w are uncoupled from T, M, v and φ, but these last are coupled, which complicates the resolution. Anyway, after injecting eq. $(5.19)_2$ into the differentiated eq. $(5.19)_3$, we obtain an equation depending uniquely upon φ

$$(EJ\varphi')'' = p - m'. \tag{5.20}$$

Once φ obtained, it can be injected into eq. $(5.19)_2$ to obtain an equation depending uniquely on v.

5.2.5 The Euler-Bernoulli rod

Since the XVIIIth century a simplified model has been proposed by L. Euler and Jacob Bernoulli for the bending case: the basic assumption of the Euler-Bernoulli rod theory is that

$$\beta = \varphi \;\Rightarrow\; \gamma = 0. \tag{5.21}$$

Geometrically, this corresponds to the vanishing of the angular sliding: unlike in the Timoshenko's model, *a segment originally orthogonal to the axis remains orthogonal to the deformed axis: hypothesis of conservation of the normals.*

For small perturbations, this assumption gives

$$\varphi = \beta \simeq v' \;\rightarrow\; \kappa = -\varphi' = -v''. \tag{5.22}$$

The equations for N and ε are not affected by this assumption, while for M and v we get

$$\begin{aligned} &M = -EJv'', \\ &(-EJv'')' = T + m, \\ &(EJv'')'' = p - m'. \end{aligned} \tag{5.23}$$

These are the famous equations of the *Euler-Bernoulli rod model.* The problems for N, T and M are now uncoupled; the bending problem is reduced to a fourth-order differential equation. For what concerns T, this can be obtained by the second one of the above equations, not from the constitutive equation because this should give $T = 0$ identically, which would imply M = constant, which is false. Alternatively, T can be calculated directly by the equilibrium equation once M known, by differentiation.

The above equations are valid for plane, rectilinear rods of any cross section, also variable with z. For the very common case of constant cross section and material, they simplify to

$$\begin{aligned} &M = -EJv'', \\ &-EJv''' = T + m, \\ &EJv^{\mathrm{iv}} = p - m'. \end{aligned} \tag{5.24}$$

The solution of eqs. (5.23) or (5.24), or in the general case of the Timoshenko's model, provides the displacement of the rod, determining hence its deformed shape, the so-called *elastica*.

5.2.6 Isostatic and hyperstatic rods

The general problem for a rod is: knowing the applied actions p, q, m and the boundary conditions, determine N, T, M, v, w and φ. Two cases are possible: the rod is isostatic or it is hyperstatic.

In the isostatic case, the equilibrium equations are sufficient to solve the problem:

$$\begin{aligned} N' &= -r, \\ M'' &= -p + m'. \end{aligned} \tag{5.25}$$

T can be obtained directly by eq. $(5.5)_2$,

$$T' = -p, \tag{5.26}$$

or alternatively through eq. $(5.5)_3$:

$$T = M' - m, \tag{5.27}$$

once solved the bending equation, which is what is commonly done. Equation $(5.25)_1$ is of the first order and it needs one boundary condition: the value of N at one end. This is not the case for the bending equation, eq. $(5.25)_2$: it is of the second order, so it needs two boundary conditions: the value that M or its derivative $M' = T + m$ takes at the ends of the rod. If T is computed in the second manner indicated hereon, there is no need to specify boundary conditions for it, otherwise just one boundary condition, the value of T at one end, must be associated to eq. (5.26). In all the cases, the boundary conditions specify the values that the internal actions, N, T or M, take at the end of the rod.

Once the internal actions known, the problem is statically solved and the deformations of the rod can be found using the constitutive equations; for the Timoshenko's rod we have:

$$\varepsilon = \frac{N}{EA}, \quad \gamma = \frac{\chi T}{\mu A}, \quad \kappa = \frac{M}{EJ}. \tag{5.28}$$

Finally, the displacements are obtained through the compatibility equations:

$$\begin{aligned} w' &= \varepsilon \Rightarrow w' = \frac{N}{EA}, \\ v' &= \varphi + \gamma \Rightarrow v' = \varphi + \frac{\chi T}{\mu A}, \\ \varphi' &= -\kappa \Rightarrow \varphi' = -\frac{M}{EJ}. \end{aligned} \tag{5.29}$$

Hence, it is not necessary to pass through the deformations: displacements can be calculated directly from the internal actions. The solution of the above first-order differential equations needs a boundary condition for each equation, specifying the value of w, v or φ at one of the rod's ends.

For the Euler-Bernoulli's rod, $\gamma = 0$ and $\varphi = v'$, so eqs. $(5.28)_{1,3}$ and $(5.29)_1$ do not change, while eqs. $(5.28)_2$ and $(5.29)_2$ become meaningless and eq. $(5.29)_3$ becomes

$$v'' = -\kappa \Rightarrow v'' = -\frac{M}{EJ}, \tag{5.30}$$

a second-order equation that needs two boundary conditions, the value of v or $v'(= \varphi)$, i.e. of the deflection or of the rotation at the rod's ends.

Another way to determine v and v' for an isostatic rod is the use of the Mohr's theorem and corollary, cf. Sect. 5.3.

The case of hyperstatic rods is apparently more complicate, but in practice more direct. Because the equilibrium equations are not sufficient to solve statically the rod, one needs to take into account, in equilibrium, of the constitutive law and relate the external actions r, p and m to the displacements. This is exactly what is done, in the Timoshenko's rod, by eqs. (5.19) and (5.20):

$$\begin{aligned} &(EAw')' = -r, \\ &\left[\frac{\mu A}{\chi}(v' - \varphi)\right]' = -p, \\ &(EJ\varphi')'' = p - m'. \end{aligned} \tag{5.31}$$

The above equations need the association of two boundary conditions to the first and to the second equation, while three conditions are to be written for the third one; in all the cases, these boundary conditions specify the value of the displacement components at the ends of the rod.

In the case of the Euler-Bernoulli rod, eq. $(5.31)_1$ does not change, eq. $(5.31)_2$ is meaningless while eq. $(5.31)_3$ becomes eq. $(5.23)_3$,

$$(EJv'')'' = p - m'; \tag{5.32}$$

this is a fourth order differential equation, needing four boundary conditions. Such conditions specify the value of v, v', v'' or v''' at the rod's end. Because[1], see eqs. (5.22), $(5.24)_{1,2}$,

$$v' = \varphi, \quad v'' = -\frac{M}{EJ}, \quad v''' = -\frac{T+m}{EJ}, \tag{5.33}$$

the boundary conditions can concern hence both geometric, the deflexion v and the rotation φ, and mechanical quantities, M and T.

In all the cases, once the displacements found, the internal actions can be calculated through the constitutive equations, i.e. for the Timoshenko's model through eq. (5.18). As already said, eq. $(5.18)_1$ is still valid, also for the Euler-Bernoulli rod, while eq. $(5.18)_2$ is meaningless: the shear T can be calculated through the equilibrium equation, eq. (5.27), once M known, which can be obtained by eq. $(5.23)_1$.

For ending this Section, we remark that the difference in the resolution of isostatic or hyperstatic rods is in the number and types of boundary conditions to be specified, besides the differential equations, of the first or second order in the first case, of the second, third or fourth order for the second one.

5.2.7 The torsion equations

The results found for plane rods can be easily generalized to include an out-of-plane effect, that of torsion M_T. The general scheme is that in fig. 5.3:

[1]The more general case of rods of varying section is slightly more complicate and needs the use of eq. $(5.23)_{1,2}$.

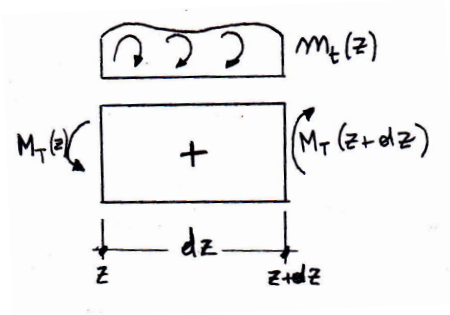

Figure 5.3: Scheme for the torsion of a rod.

- balance of the torsion:

$$\begin{aligned} &M_T(z+dz) - M_T(z) + m_t(z)dz = 0 \ \rightarrow \\ &M_T(z) + \frac{dM_T(z)}{dz}dz - M_T(z) + m_t(z)dz = 0 \ \rightarrow \\ &\frac{dM_T}{dz} = -m_t; \end{aligned} \tag{5.34}$$

- compatibility equations: the kinematical descriptor of torsion is the *twist angle* θ; it is linked to the internal descriptor α, giving the relative rotation of two sections separated by a distance dz by the relation

$$\alpha = \frac{d\theta}{dz}; \tag{5.35}$$

- constitutive law: the strain energy of torsion for a beam is (see Ex. 8 Chapt. 4)

$$U_b = \frac{1}{2}\int_1^2 \frac{q\ M_T^2}{\mu J_0} dz, \tag{5.36}$$

  and as a rod

$$U_r = \frac{1}{2}\int_1^2 M_T\ \alpha\ dz, \tag{5.37}$$

  so we get

$$M_T = \frac{\mu\ J_0}{q}\alpha, \tag{5.38}$$

  a result already known from the Sant-Venant theory.

Finally we have

$$\begin{aligned} &M_T = \frac{\mu\ J_0}{q}\theta', \\ &\left(\frac{\mu\ J_0}{q}\theta'\right)' = -m_t, \end{aligned} \tag{5.39}$$

These equations for torsion are formally identical to those for extension, eqs. $(5.18)_1$ and $(5.19)_1$.

5.3 The Mohr's theorems

Let us now consider the case of a bent beam of constant stiffness EJ and without distributed couples; then,

$$M' = T, \quad T' = -p \;\rightarrow\; M'' = -p, \quad v'' = -\frac{M}{EJ}. \tag{5.40}$$

These two differential equations are formally identical ; so, the *elastica* of a rod coincides with the diagram of the bending moment M^* generated by a fictitious load

$$p^* = \frac{M}{EJ} \;\rightarrow\; v = M^*. \tag{5.41}$$

This is the *Theorem of Mohr* (1868); to remark that p^* is the curvature. Deriving eq. $(5.41)_2$ gives

$$v' = (M^*)' = T^*, \tag{5.42}$$

i.e. the inclination φ of the *elastica* is given by the fictitious shear T^* ($\beta \simeq \tan\beta = v'$ for small perturbations). This is the *corollary of Mohr*.

The fictitious load p^* is to be applied to a fictitious rod, having the same dimensions of the real rod but whose boundary conditions must in general be changed:

- for a simply supported rod, the *elastica* has $v = 0$ and $v' \neq 0$ at the edges; the corresponding edges of the fictitious rod can be found considering that in the correspondence it must be $M^* = 0$ and $T^* \neq 0$; hence the fictitious rod must be simply supported, like the real rod;
- for a cantilever: at the clamped edge, $v = 0$ and $v' = 0$: the corresponding edge in the fictitious rod must be a free edge, because in such a way $M^* = 0$ and $T^* = 0$; at the free edge of the cantilever, $v \neq 0$ and $v' \neq 0$: in the corresponding edge of the fictitious rod it must be $M^* \neq 0$ and $T^* \neq 0$, so this edge must be clamped: a cantilever rod is transformed into a fictitious cantilever where the edges are swapped.

Other situations can be studied in a similar way. The use of the Mohr's theorem, and corollary, is normally bounded to isostatic rods. In fact, in such a case the use of the Mohr's technique allows for finding deflections and rotations using exclusively equilibrium considerations, so without the need of solving differential equations. In the case of hyperstatic rods, as we have seen above, the solution of the static problem passes through the determination of the displacements and rotations, so in this case the Mohr's theorem and corollary become useless.

5.4 The Principle of Virtual Displacements for rods

The PVD can be adapted to rods; first of all, we define a *state of virtual displacements-deformations for a rod* a state for which v, w, φ are

i. regular (continuous and with piecewise continuous derivatives);

ii. infinitesimal;

iii. independent from time.

Be N, T, M, p, r a *field of equilibrated actions*, i. e.

$$\begin{aligned} \frac{dN}{dz} &= -r, \\ \frac{dT}{dz} &= -p, \qquad + \text{ b. c.} \\ \frac{dM}{dz} &= T, \end{aligned} \tag{5.43}$$

We can then prove the following

Theorem. *(Principle of Virtual Displacements for rods): be $\{v^*, w^*, \varphi^*\}$ a field of virtual displacements for a rod of length ℓ in equilibrium under the action of external and internal actions; then*

$$\int_0^\ell (N\varepsilon^* + T\gamma^* + M\kappa^*)\ dz = \int_0^\ell (p\ v^* + r\ w^*)\ dz. \tag{5.44}$$

Proof. We remark first that the the left-hand side of the above equation is the internal virtual work, produced by the internal actions for the deformations corresponding to the considered virtual displacements field, while to the right-hand side we have the external virtual work, i.e. that produced by the external applied loads. Hence, once more, the PVD states the equality of the internal and external virtual works.

Because, by hypothesis, u^*, v^* and φ^* are sufficiently regular, we can calculate the internal virtual deformations for the rod

$$\varepsilon^* = \frac{dw^*}{dz}, \quad \gamma^* = \frac{dv^*}{dz} - \varphi^*, \quad \kappa^* = -\frac{d\varphi^*}{dz}. \tag{5.45}$$

Then, the internal virtual work becomes

$$\int_0^\ell \left[N\frac{dw^*}{dz} + T\left(\frac{dv^*}{dz} - \varphi^*\right) - M\frac{d\varphi^*}{dz} \right]\ dz, \tag{5.46}$$

and integrating by parts we get

$$[N\ w^* + T\ v^* - M\ \varphi^*]_0^\ell + \int_0^\ell \left[\varphi^* \left(\frac{dM}{dz} - T\right) - w^*\frac{dN}{dz} - v^*\frac{dT}{dz} \right]\ dz. \tag{5.47}$$

The boundary term, the first one in the above equation, vanishes because at the edges it is either an internal action either its dual kinematical descriptor to vanish. Because the actions are equilibrated, eqs. (5.43) are satisfied, so that the term in brackets under the sign of integral vanishes and finally we get

$$\int_0^\ell (N\varepsilon^* + T\gamma^* + M\kappa^*)\ dz = \int_0^\ell (p\ v^* + r\ w^*)\ dz. \tag{5.48}$$

□

We remark that constitutive equations have not been used in the proof of the PVD, so it is valid for any type of material behavior, not only for the elastic rods.

5.5 Hyperstatic systems of rods

The equations of rods allow, in principle, for studying any problem of rod structures, regardless of the degree of hyperstaticity. Nevertheless, practically, they can tackle only simple cases, e.g. single rods or sometimes systems of two rods, because very quickly they become too complicate to be solved.

Actually, this approach is complete: it provides any type of information (v, w, M etc.) everywhere in a rod. So, the question is to know whether or not it can exist an approach which, paying the price of a lower information, can be nevertheless used effectively for more complicated rod structures.

The answer is yes, and such a method is actually based upon the PVD; such a method is sometimes called the *force method for solving hyperstatic rod structures*, because the unknown of the method are generalized forces (forces or couples). We introduce it in the following Section, specifying since now that the method, though based upon the PVD, valid for any type of material behavior, is *valid only for a linear structural behavior.* This assumption implies actually two distinct and equally important hypotheses: the material is linearly elastic, on one side, and the perturbations are small, on the other side.

5.5.1 The Müller-Breslau equations

We introduce the method through an example, shown in Fig. 5.4; the structure in object is twice hyperstatic and, thanks to the assumption of linear behavior, using the principle of superposition of the effects, we can think to the structure as the sum of three isostatic structures. This is a key point of the method: *the original hyperstatic structures is transformed into the sum of isostatic structures, that can be solved separately using nothing but equilibrium conditions.* In particular, the original structure is decomposed into:

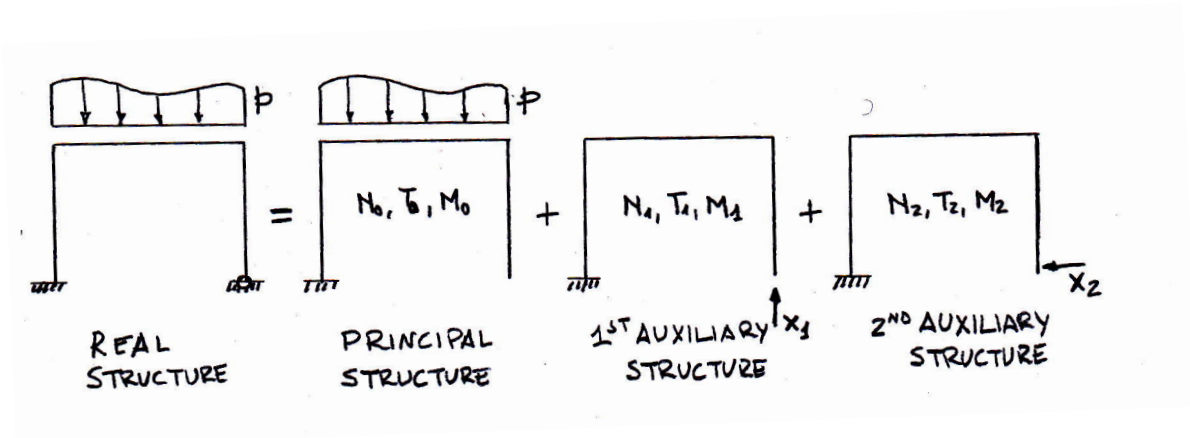

Figure 5.4: Scheme for the analysis of hyperstatic rod structures.

- a *principal structure*: the hyperstatic constraints have been removed (their choice is not unique and anyway arbitrary) and the structure so obtained is acted upon only by the given, known loads;

- a number of *auxiliary structures* equal to the number of hyperstatic constraints removed (in the example, two); each auxiliary structure is *loaded uniquely by an unknown generalized force*, a reaction, statically dual of the corresponding removed hyperstatic constraint.

Hence, there is an unknown generalized force for each degree of hyerstaticity, and each one of them is applied to an auxiliary structure; in our example, we have hence two unknowns, x_1 and x_2, indicated in Fig. 5.4. These unknowns are determined imposing the *geometrical condition that their corresponding displacement is null.* We remark hence that in this method the unknowns are forces and the equations, compatibility conditions on the displacements.

Because each one of the structures decomposing the original hyperstatic one is isostatic, it is possible to determine everywhere the internal actions merely using balance equations. We indicate with

- N_0, T_0, M_0 the internal actions in the principal structure;
- N_i, T_i, M_i those in the ith auxiliary structure *loaded with* $x_i = 1$.

Thanks to the assumption of linearity, the actual internal actions in the real, hyperstatic structure, are given by the superposition of the effects:

$$\begin{aligned} N &= N_0 + \sum_{i=1}^{n} x_i N_i, \\ T &= T_0 + \sum_{i=1}^{n} x_i T_i, \\ M &= M_0 + \sum_{i=1}^{n} x_i M_i, \end{aligned} \tag{5.49}$$

with n the degree of hyperstaticity.

To determine the unknowns x_i we use the PVD; to this purpose, we consider as virtual displacements those of the real structure, that are of course surely admissible. As forces, we consider those in each one of the auxiliary structures; because these structures are isostatic, the internal actions, calculated using balance equations, are surely equilibrated with the external loads. As a consequence, we are authorized to use the PVD with such a system of forces and field of virtual (actually, in this case real) displacements. We apply the PVD as much times as the auxiliary structures, i.e. as the degree of hyperstaticity:

- 1st auxiliary structure:
  - virtual work of the external forces ($x_1 = 1$): the point of application of x_1 is fix, in the real structure, so its virtual displacement is null, and hence the corresponding virtual work;
  - virtual work of the internal forces (we indicate with Ω the whole structure):

$$\int_{\Omega} (N_1 \varepsilon + T_1 \gamma + M_1 \kappa) \, d\ell; \tag{5.50}$$

the first equation is hence

$$\int_\Omega (N_1\varepsilon + T_1\gamma + M_1\kappa)\ d\ell = 0; \tag{5.51}$$

- 2nd auxiliary structure: proceeding in the same way we obtain

$$\int_\Omega (N_2\varepsilon + T_2\gamma + M_2\kappa)\ d\ell = 0. \tag{5.52}$$

In the above equations, the internal kinematical descriptors ε, γ and κ are those in the real structure. So, using the constitutive equations of elastic rods and the superposition of the effects we get

$$\begin{aligned}
\varepsilon &= \frac{N}{EA} = \frac{N_0 + x_1N_1 + x_2N_2}{EA},\\
\gamma &= \chi\frac{T}{\mu A} = \chi\frac{T_0 + x_1T_1 + x_2T_2}{\mu A},\\
\kappa &= \frac{M}{EJ} = \frac{M_0 + x_1M_1 + x_2M_2}{EJ}.
\end{aligned} \tag{5.53}$$

Replacing the relations above in the two PVD equations, after regrouping the terms we get

$$\begin{aligned}
&x_1\int_\Omega\left(\frac{N_1^2}{EA} + \chi\frac{T_1^2}{\mu A} + \frac{M_1^2}{EJ}\right)\ d\ell + x_2\int_\Omega\left(\frac{N_1N_2}{EA} + \chi\frac{T_1T_2}{\mu A} + \frac{M_1M_2}{EJ}\right)\ d\ell\\
&+\int_\Omega\left(\frac{N_1N_0}{EA} + \chi\frac{T_1T_0}{\mu A} + \frac{M_1M_0}{EJ}\right)\ d\ell = 0,\\
&x_1\int_\Omega\left(\frac{N_1N_2}{EA} + \chi\frac{T_1T_2}{\mu A} + \frac{M_1M_2}{EJ}\right)\ d\ell + x_2\int_\Omega\left(\frac{N_2^2}{EA} + \chi\frac{T_2^2}{\mu A} + \frac{M_2^2}{EJ}\right)\ d\ell\\
&+\int_\Omega\left(\frac{N_2N_0}{EA} + \chi\frac{T_2T_0}{\mu A} + \frac{M_2M_0}{EJ}\right)\ d\ell = 0.
\end{aligned} \tag{5.54}$$

These equations have the form of a symmetric system of linear algebraic equations; in the general case of n degrees of hyperstaticity, we have a system of n equations with n unknowns x_i that can be synthetically written

$$\eta_{ij}x_j = \eta_{i0}, \tag{5.55}$$

with

$$\begin{aligned}
\eta_{ij} = \eta_{ji} &= \int_\Omega\left(\frac{N_iN_j}{EA} + \chi\frac{T_iT_j}{\mu A} + \frac{M_iM_j}{EJ}\right)\ d\ell,\\
\eta_{i0} &= -\int_\Omega\left(\frac{N_iN_0}{EA} + \chi\frac{T_iT_0}{\mu A} + \frac{M_iM_0}{EJ}\right)\ d\ell.
\end{aligned} \tag{5.56}$$

The terms on the diagonal, η_{ii} are necessarily positive, as it is apparent from the above equations. Equations (5.55) are the *Müller-Breslau equations* (1886), with the coefficients

of the unknowns given by eq. (5.56). They provide the classical method for the resolution of hyperstatic systems of elastic rods. In the very frequent case of slender rods, the extension and shear deformation are much smaller than the bending one, so they can be neglected and the calculation of the coefficients is greatly simplified, as it is reduced to the only bending terms.

As a last point we remark that once determined the unknowns x_i, the real distribution of the internal actions in the structure can be easily calculated using eq. (5.49).

5.5.2 The dummy load method

The method of the forces does not give everything, e.g. it does not give the displacements. Anyway, we can calculate the displacement v in a point still using the PVD, by the so-called *dummy load method*. To this purpose, we apply the PVD using as displacement field the real one and as forces those in any equilibrated isostatic system acted upon uniquely by a unit force, the *dummy load*, dual of the displacement v to be found.

The virtual work of the external forces is hence equal to v, while that of the internal forces is

$$\int_\Omega \left(\frac{N\ N_d}{EA} + \chi \frac{T\ T_d}{\mu A} + \frac{M\ M_d}{EJ} \right)\ d\ell, \tag{5.57}$$

where N, T, M are the real internal actions; they are already known by a previous calculation, for instance a merely static one if the structure is isostatic or having solved the Müller-Breslau equations if it is hyperstatic. N_d, T_d, M_d are the internal actions produced on the isostatic structure by the dummy load; being the structure isostatic, they can be calculated by simple static conditions, hence they are equilibrated.

Finally, the PVD gives

$$v = \int_\Omega \left(\frac{N\ N_d}{EA} + \chi \frac{T\ T_d}{\mu A} + \frac{M\ M_d}{EJ} \right)\ d\ell. \tag{5.58}$$

5.5.3 Effects of the temperature

A final question concerns the effects of the temperature changes. We still use the Hooke-Duhamel model (see Ex. 12, Chapt. 3):

$$\boldsymbol{\varepsilon} = \boldsymbol{\varepsilon}_m + \boldsymbol{\varepsilon}_t, \tag{5.59}$$

where $\boldsymbol{\varepsilon}_m$ is the mechanical deformation, given by the Lamé's inverse equations (3.45), while the thermal deformation $\boldsymbol{\varepsilon}_t$ is given by

$$\boldsymbol{\varepsilon}_t = \Delta t\ \alpha \mathbf{I}, \tag{5.60}$$

where Δt is the temperature variation with respect to a state where, conventionally, $\boldsymbol{\varepsilon}_t = \mathbf{o}$, and α is the *coefficient of thermal expansion*.

For what concerns Δt, the usual assumption in the rod theory is that it has a linear variation through the thickness of the rod, see Fig. 5.5, which is rigorously true in a stationary heat flow:

$$t(y) = t_0 + \frac{\delta t}{h} y, \quad t_0 = \frac{t^+ + t^-}{2}, \quad \delta t = t^+ - t^-. \tag{5.61}$$

The global temperature change is hence decomposed into a uniform, t_0, and an antisymmetric one, δt.

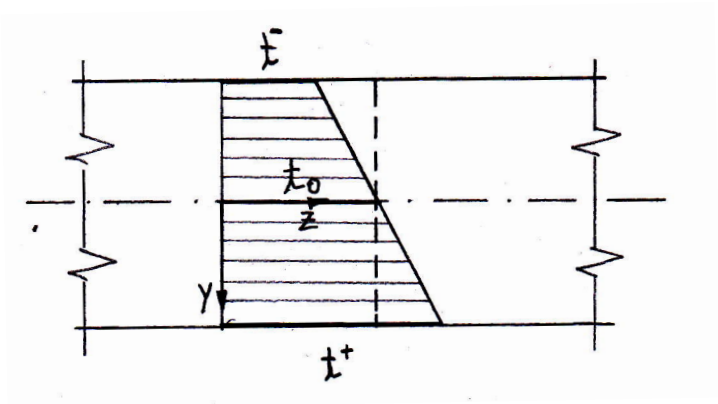

Figure 5.5: Decomposition of a linear temperature change on a rod.

Now, we need to link $\boldsymbol{\varepsilon}_t$ to the deformation descriptors, $\varepsilon, \gamma, \kappa$. To this end, we consider a length of rod between the sections 1 and 2 and we write the strain energy of the beam and of the rod, that must be equal. Because for a Saint-Venant beam it is $\sigma_{11} = \sigma_{22} = \sigma_{12} = 0$, we have

$$\frac{1}{2} \int_1^2 (\sigma_{33}\varepsilon_{33} + 2\sigma_{13}\varepsilon_{13} + 2\sigma_{23}\varepsilon_{23})\, dv = \frac{1}{2} \int_1^2 (N\varepsilon + T\gamma + M\kappa)\, dz. \tag{5.62}$$

But the $(\varepsilon_t)_{13} = (\varepsilon_t)_{23} = 0$, because of eq. (5.60); then, using the Saint-Venant Problem results and the linear variation of t through the rod thickness we get, for the left-hand term,

$$\frac{1}{2} \int_1^2 \left[\int_S \alpha \left(\frac{N}{A} + \frac{M\, y}{J} \right) \left(t_0 + \frac{\delta t}{h} y \right) \, ds \right] dz = \frac{1}{2} \int_1^2 \alpha \left(N\, t_0 + M \frac{\delta t}{h} \right) dz, \tag{5.63}$$

the other terms are null because o is the centroid of the cross section. So, because this equation must be true $\forall 1$ and 2, the two integrands must be equal, which gives

$$\begin{aligned} \varepsilon &= \alpha\, t_0, \\ \gamma &= 0, \\ \kappa &= \alpha \frac{\delta t}{h}. \end{aligned} \tag{5.64}$$

Shear deformation is not affected by temperature changes; extension is influenced only by uniform and bending only by antisymmetric changes of temperature. These deformation descriptors for the temperature changes can be used in the Müller-Breslau equations to solve the case of hyperstatic rod structures thermally loaded.

5.6 Exercises

1. Determine the elastica of a cantilever beam with $EJ =$ const., loaded:
   i. by a uniform load p;
   ii. by a concentrated force F at the free edge (this is the *Galileo's problem*);
   iii. by a couple M at the free edge.
2. Determine the function $J(z)$ that a homogeneous uniformly loaded cantilever must have to bend along a circular arch of radius R.
3. Determine the axial force N and displacement w of a vertical rod with $EA =$ const. clamped at its ends and submitted to its own weight.
4. Determine the variation $h(z)$ of the height of a rectangular cross section of a cantilever loaded by a concentrated force at its free edge in order to have everywhere the same highest stress σ_{33} (*Galileo's problem of the rod of uniform strength*).
5. What does it change in the previous problem if it is the highest Von Mises equivalent stress to be constant throughout the rod length?
6. Determine the displacement v of the center of a clamped-clamped rod loaded at mid-span by a concentrated force F.
7. Study the structure in the figure and determine the maximum deflection (use the rod equations of the Euler-Bernoulli model).

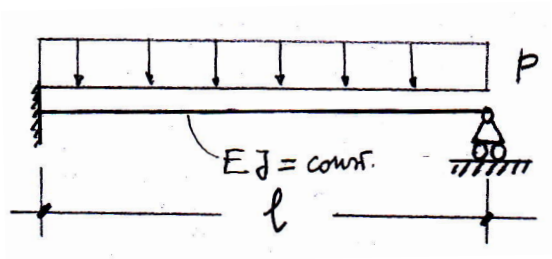

8. Study the same problem but now using the Timoshenko's rod model.
9. Resolve statically the previous exercise using the Müller-Breslau equations.
10. Find the displacement of the free edge of the rod in the figure using:
    i. the rod equations;
    ii. the Mohr's theorem;
    iii. the dummy load method.

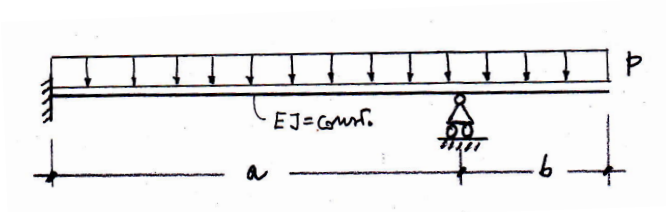

11. A rod clamped at the ends is thermally loaded by:

i. a uniform temperature t_0;

ii. a through the thickness linear variation of the type $t^- = -t, \quad t^+ = +t$.

Study the structure in both the cases, finding the reactions, internal actions and displacements, using first the rod equations, then the Müller-Breslau equations and the dummy load method.

12. Consider again the two cases of the previous exercice, but now the rod is simply supported; what changes for the rod?

13. Study the structure in the figure, finding also the rotation of the central point, using first the rod equations, then the Müller-Breslau equations and the dummy load method.

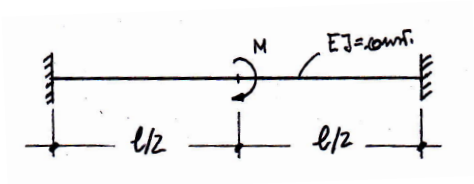

14. For the structure in the following figure, determine F so as to have a null displacement of point C.

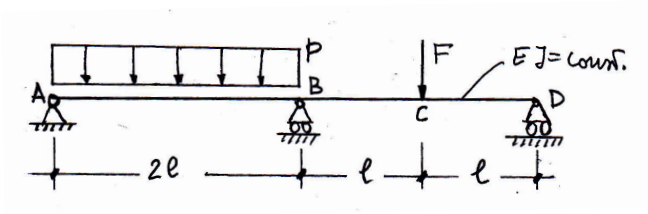

15. Solve the previous problem with the span AB now loaded by a through the thickness linear variation of the temperature of the type $t^- = -t, \quad t^+ = +t$.

16. Study the structure in the figure, using first the rod equations, then the Müller-Breslau equations.

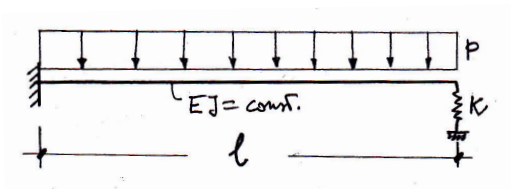

17. Make the same, loading now the rod uniquely by a thermal load of the type $t^- = -t, \quad t^+ = +t$.

18. Solve the structure in the figure using the Müller-Breslau equations.

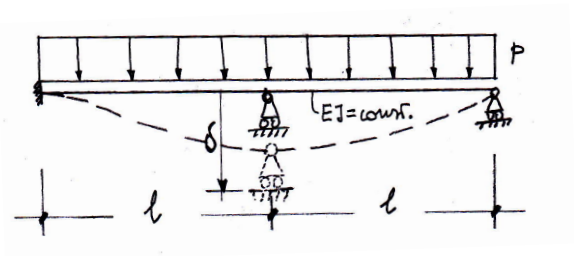

19. Make the same, loading now the rod uniquely by a thermal load of the type $t^- = -t, \quad t^+ = +t$.

20. Solve the structure in the following figure using the Müller-Breslau equations (neglect the axial and shear deformations). What happens when $\lambda \to \infty$?

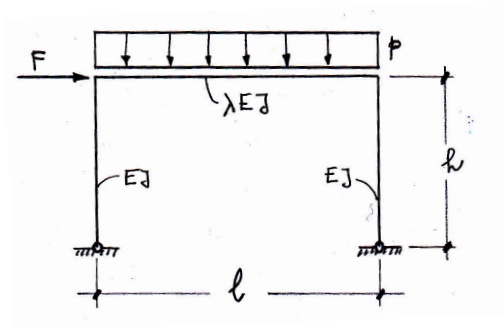

21. Calculate the total displacement of point C for the structure in the figure using the dummy load method.

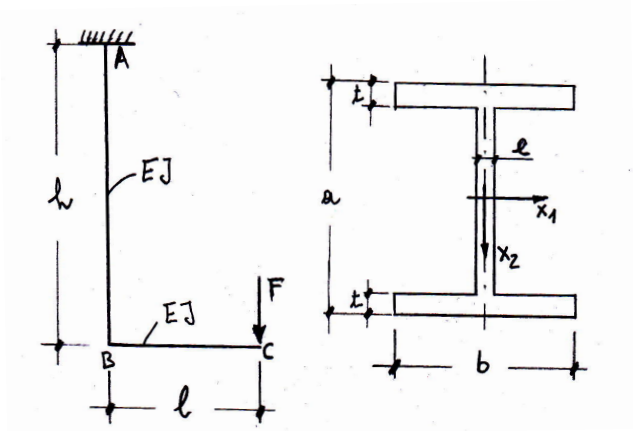

Data:

- $E = 210000$ MPa
- $h = 4$ m
- $\ell = 2$ m
- $F = 500$ KN
- $a = 200$ mm
- $b = 200$ mm
- $e = 10$ mm
- $t = 16$ mm

22. Study the problem of a cantilever loaded by a uniform load p using the Theorem of Minimum Total Potential Energy.

23. Using the Theorem of Castigliano, calculate the displacement of the free edge of a cantilever of constant section loaded by a concentrated force P at the free edge.

24. The system in the figure is composed by five identical rods; calculate the displacement of point A using the Theorem of Castigliano.

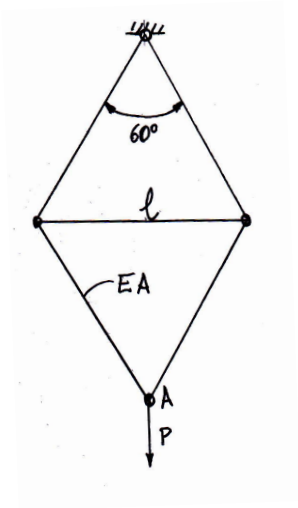

25. An infinitely long pipe, whose weight per unit length is p and whose constant bending stiffness is EJ, lays on a horizontal plane, that can be considered as infinitely rigid. The pipe must be lifted at a certain point, by a crane, of a height equal to h. Which is the lifting force that the crane must produce?

26. A rod whose length is ℓ, weight per unit length p and constant bending stiffness EJ, lays on a horizontal plane, that can be considered as infinitely rigid. At the left end, the rod is acted upon by a vertical force F. For what conditions the equilibrium is ensured? How much the left end of the rod will be lifted up by F?

27. A rod whose length is ℓ, weight per unit length p, thickness h and constant bending stiffness EJ, lays on a horizontal plane, that can be considered as infinitely rigid. The rod is heated on its upper surface to a temperature t, while the lower part is at the temperature $-t$. Determine the vertical displacement of the mid point of the rod.

28. Study the case of an Euler-Bernoulli elastic rod of length $\ell \to \infty$ that is submitted to a concentrated load F and that lays on an elastic substrate whose elastic constant is k (this is the case of a *rod on a Winkler's soil*).

29. Study now the case of a rod on an elastic soil, with finite length ℓ and submitted to a uniform load p. Can you predict the result?

30. A pile of length ℓ is driven into an elastic soil of elastic constant k and it is submitted, at its top, to an horizontal force F. Use the Euler-Bernoulli rod model to study the pile.

Suggested texts

1. A. E. H. Love: *A treatise on the mathematical theory of elasticity.* Fourth edition. Dover, 1944.
2. I. S. Sokolnikoff: *Mathematical theory of elasticity.* McGraw-Hill, 1946.
3. S. Timoshenko, J. N. Goodier: *Theory of elasticity.* Second edition. McGraw-Hill, 1951.
4. P. Germain, P. Muller: *Introduction à la mécanique des milieux continus.* Masson, 1980.
5. M. E. Gurtin: *An introduction to continuum mechanics.* Academic Press, 1981.
6. F. Hartmann: *The mathematical foundation of structural mechanics.* Springer, 1985.
7. J. R. Barber: *Elasticity.* Kluwer Academic Publishers, 1992.
8. P. Podio-Guidugli: *A primer in elasticity.* Journal of Elasticity, v. 58: 1-104, 2000.
9. W. S. Slaughter: *The linearized theory of elasticity.* Birkhäuser, 2002.
10. P. M. Mariano, L. Galano: *Fundamentals of the Mechanics of Solids*, Birkhäuser, 2016.